

PATHFINDER

OWNER'S MANUAL

For your safety, read carefully and keep in this vehicle.

FOREWORD

This manual was prepared to help you understand the operation and maintenance of your vehicle so that you may enjoy many kilometers (miles) of driving pleasure. Please read through this manual before operating your vehicle.

A separate NISSAN Warranty Information booklet explains details about the warranties covering your vehicle. A separate maintenance booklet explains details about maintaining and servicing your vehicle.

A NISSAN dealership knows your vehicle best. When you require any service or have any questions, they will be glad to assist you with the extensive resources available to them.

In addition to factory-installed options, your vehicle may also be equipped with additional accessories installed prior to delivery. It is recommended that you visit a NISSAN dealer for details concerning the particular accessories with which your vehicle is equipped. It is important that you familiarize yourself with all disclosures, warnings, cautions and instructions concerning proper use of such accessories prior to operating the vehicle and/or accessory. It is recommended that you visit a NISSAN dealer for details concerning the particular accessories with which your vehicle is equipped.

READ FIRST—THEN DRIVE SAFELY

Before driving your vehicle, please read this Owner's Manual carefully. This will ensure familiarity with controls and maintenance requirements, assisting you in the safe operation of your vehicle.

⚠WARNING

IMPORTANT SAFETY INFORMATION REMINDERS!

Follow these important driving rules to help ensure a safe and comfortable trip for you and your passengers!

- **NEVER drive under the influence of alcohol or drugs.**
- **ALWAYS observe posted speed limits and never drive too fast for conditions.**
- **ALWAYS give your full attention to driving and avoid using vehicle features or taking other actions that could distract you.**
- **ALWAYS use your seat belts and appropriate child restraint systems. Pre-teen children should be seated in the rear seat.**
- **ALWAYS provide information about the proper use of vehicle safety features to all occupants of the vehicle.**
- **ALWAYS review this Owner's Manual for important safety information.**

For descriptions specified for 4-wheel drive models, a **4WD** mark is placed at the beginning of the applicable sections/items.

As with other vehicles with features for off-road use, failure to operate 4-wheel drive models correctly may result in loss of control or an accident. For additional information, see "Driving safety precautions" (P. 5-13).

ON-PAVEMENT AND OFF-ROAD DRIVING

This vehicle will handle and maneuver differently from an ordinary passenger car because it has a higher center of gravity for off-road use. As with other vehicles with features of this type, failure to operate this vehicle correctly may result in loss of control or an accident.

For additional information, see "On-pavement and off-road driving precautions" (P. 5-11), "Avoiding collision and roll-over" (P. 5-11) and "Driving safety precautions" (P. 5-13).

MODIFICATION OF YOUR VEHICLE

This vehicle should not be modified. Modification could affect its performance, safety, emissions or durability and may even violate governmental regulations. In addition, damage or performance problems resulting from modifications may not be covered under NISSAN warranties.

This manual includes information for all options available on this model. Therefore, you may find some information that does not apply to your vehicle.

All information, specifications and illustrations in this manual are those in effect at the time of printing. NISSAN reserves the right to change specifications or design without notice and without obligation.

IMPORTANT INFORMATION ABOUT THIS MANUAL

You will see various symbols in this manual. They are used in the following ways:

⚠ WARNING

This is used to indicate the presence of a hazard that could cause death or serious personal injury. To avoid or reduce the risk, the procedures must be followed precisely.

⚠ CAUTION

This is used to indicate the presence of a hazard that could cause minor or moderate personal injury or damage to your vehicle. To avoid or reduce the risk, the procedures must be followed carefully.

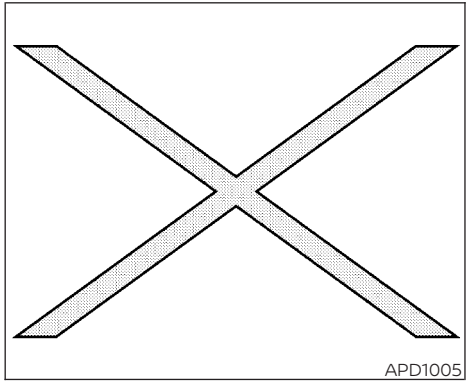
APD1005

If you see this symbol, it means **"Do not do this"** or **"Do not let this happen."**

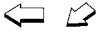

If you see a symbol similar to these in an illustration, it means the arrow points to the front of the vehicle.



Arrows in an illustration that are similar to these indicate movement or action.



Arrows in an illustration that are similar to these call attention to an item in the illustration.



LRS3485

NEVER use a rearward facing child restraint on a seat protected by an ACTIVE AIR BAG in front of it, DEATH or SERIOUS INJURY to the CHILD can occur.

For additional information, see "Supplemental air bag warning labels (Type B)" (P. 1-102).

© 2022 NISSAN NORTH AMERICA, INC.

All rights reserved. No part of this Owner's Manual may be reproduced or stored in a retrieval system, or transmitted in any form, or by any means, electronic, mechanical, photocopying, recording or otherwise, without the prior written permission of Nissan North America, Inc.

NISSAN CUSTOMER SERVICE (Mexico only)

Nissan Mexicana, S.A. de C.V. and its network of dealers are willing to respond to the needs you may have regarding your vehicle. Your satisfaction with your vehicle and each and every dealer is our main concern. The dealers are always available to address any service concern you may have.

However, if there is anything a NISSAN dealer cannot solve or if you wish to send your comments, questions or complaints directly to Nissan Mexicana S.A. de C.V., please contact our Customer Service Department by calling the phone numbers provided below or by e-mail.

In order to respond promptly, please provide your full name, address, phone number and all information related to your vehicle (VIN, model, etc.).

Tels. 01 800 9 6 4 7 7 2 6
(W N I S S A N)

Web page
http://www.nissan.com.mx

Table of contents

Illustrated table of contents	0
Safety-Seats, seat belts and supplemental restraint system	1
Instruments and controls	2
Pre-driving checks and adjustments	3
Monitor, climate, audio, phone and voice recognition systems	4
Starting and driving	5
In case of emergency	6
Appearance and care	7
Maintenance and do-it-yourself	8
Technical and consumer information	9
Index	10

0 Illustrated table of contents

Air bags, seat belts and child restraints 0-2
Exterior front 0-3
Exterior rear 0-4
Passenger compartment 0-5
Instrument panel 0-6
Engine compartment check locations 0-8
Warning and indicator lights 0-10

AIR BAGS, SEAT BELTS AND CHILD RESTRAINTS

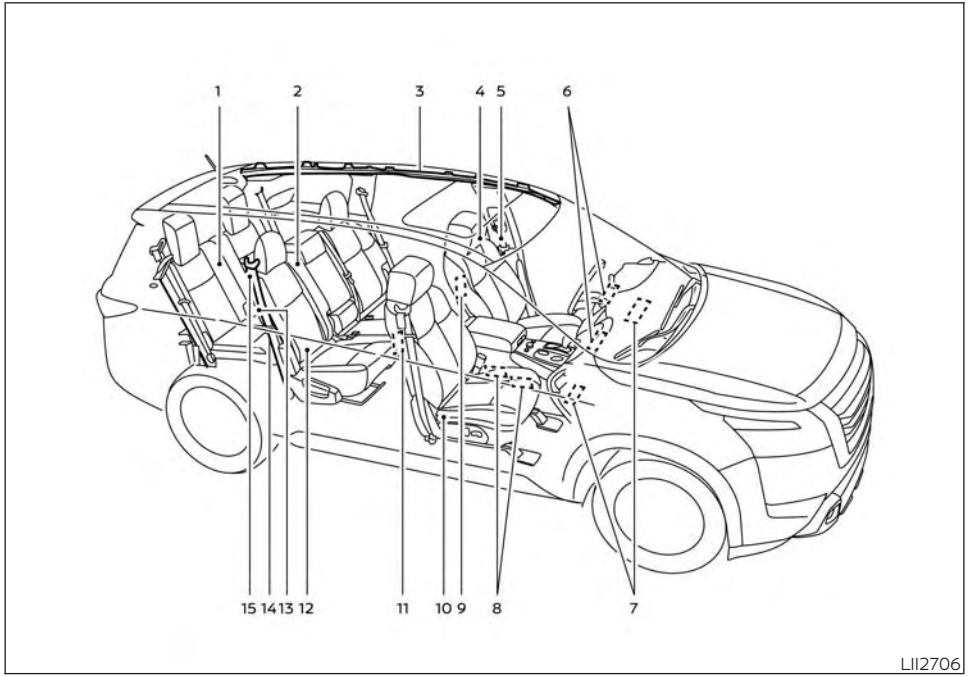

1. Folding 3rd row bench (P. 1-9)
2. Folding 2nd row bench (if so equipped) (P. 1-6)
3. Roof-mounted curtain side-impact and rollover supplemental air bag (P. 1-96)
4. Head restraints (P. 1-12)
5. Seat belts with pretensioner(s) and shoulder height adjuster (driver's side shown; passenger side similar) (P. 1-100)
6. Supplemental front-impact air bag system (P. 1-80)
7. Driver supplemental knee air bag (P. 1-98)
   Front passenger supplemental knee air bag (if so equipped) (P. 1-98)
8. Occupant classification sensor (weight sensor) (P. 1-91)
9. Front central seat-mounted side impact supplemental air bag (if so equipped) (P. 1-96)
10. Seats (P. 1-2)
11. Front seat-mounted side-impact supplemental air bag (P. 1-96)
12. LATCH (Lower Anchors and Tethers for CHildren) (P. 1-33)
    ISOFIX system (P. 1-62)
13. 2nd row outboard seat-mounted side-impact supplemental air bag modules (if so equipped) (P. 1-96)
14. 2nd row seat top tether strap anchor (located on bottom of seatback) (P. 1-38, 1-39, 1-51)
15. 2nd row outboard seat belts with pretensioner(s) (if so equipped) (passenger's side shown; driver side similar) (P. 1-100)

Refer to the page number indicated in parentheses for operating details.

EXTERIOR FRONT

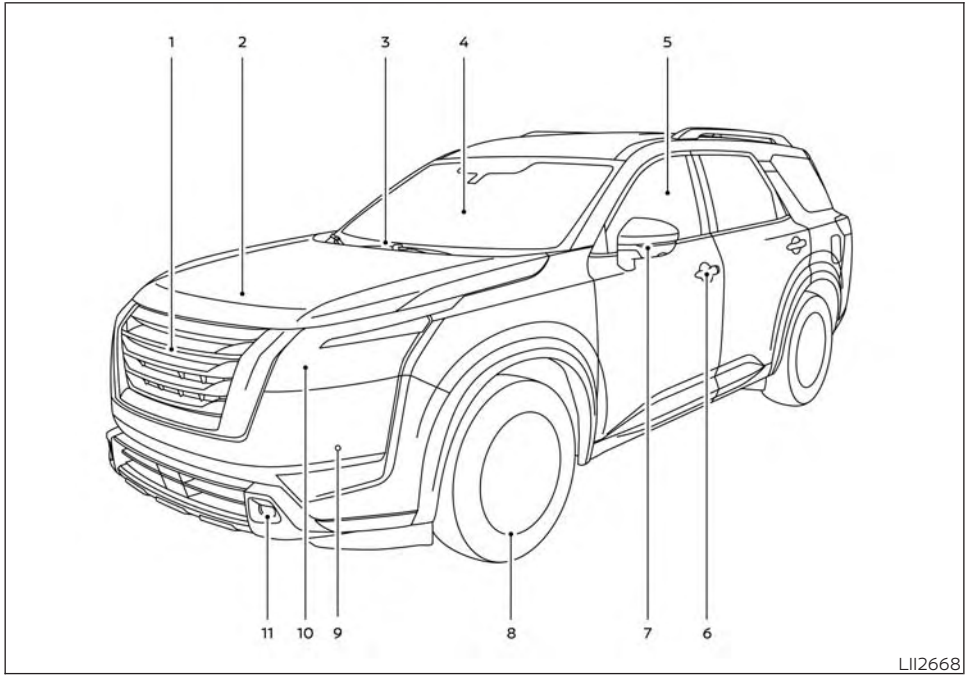

1. Front view camera (if so equipped) (P. 4-10)
2. Engine hood (P. 3-24)
3. Wiper and washer switch (P. 2-79)
4. Windshield-washer fluid (P. 8-16)
5. Power windows (P. 2-120)
6. Door locks (P. 3-5)
   NISSAN Intelligent Key® system (P. 3-7)
   Keys (P. 3-2)
7. Mirrors (P. 3-37)
   Side view camera (if so equipped) (P. 4-10)
8. Tire pressure (P. 8-35)
   Flat tire (P. 6-3)
   Tire chains (P. 8-39)
9. Front sonar sensors (if so equipped) (P. 5-237)
10. Replacing bulbs (P. 8-32)
    Headlight and turn signal switch (P. 2-83)
    LED Daytime Running Lights (DRL) system (P. 2-89)
11. Fog light switch (if so equipped) (P. 2-91)

Refer to the page number indicated in parentheses for operating details.

EXTERIOR REAR

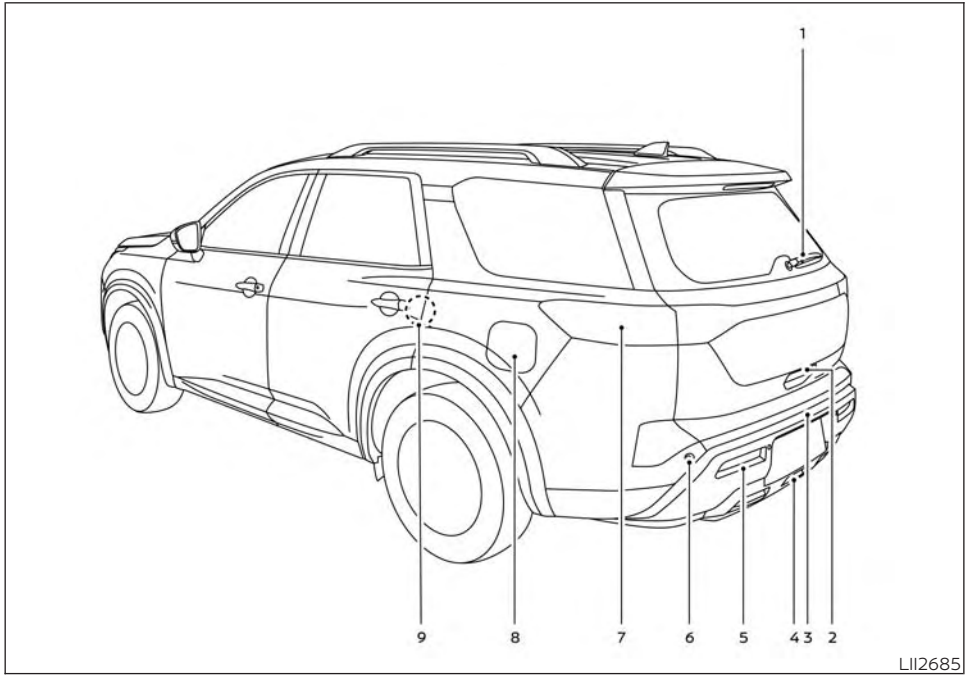

1. Rear window wiper and washer switch (P. 2-82)
2. Liftgate release (P. 3-29)
3. Rearview camera (P. 4-3, 4-10)
4. Towing (P. 5-226)
5. Rear fog light switch (if so equipped) (P. 2-91)
6. Rear sonar sensors (P. 5-237)
7. Replacing bulbs (P. 8-32)
8. Fuel-filler door (P. 3-31)
   Fuel recommendation (P. 9-5)
9. Child safety rear door lock (P. 3-7)

Refer to the page number indicated in parentheses for operating details.

PASSENGER COMPARTMENT

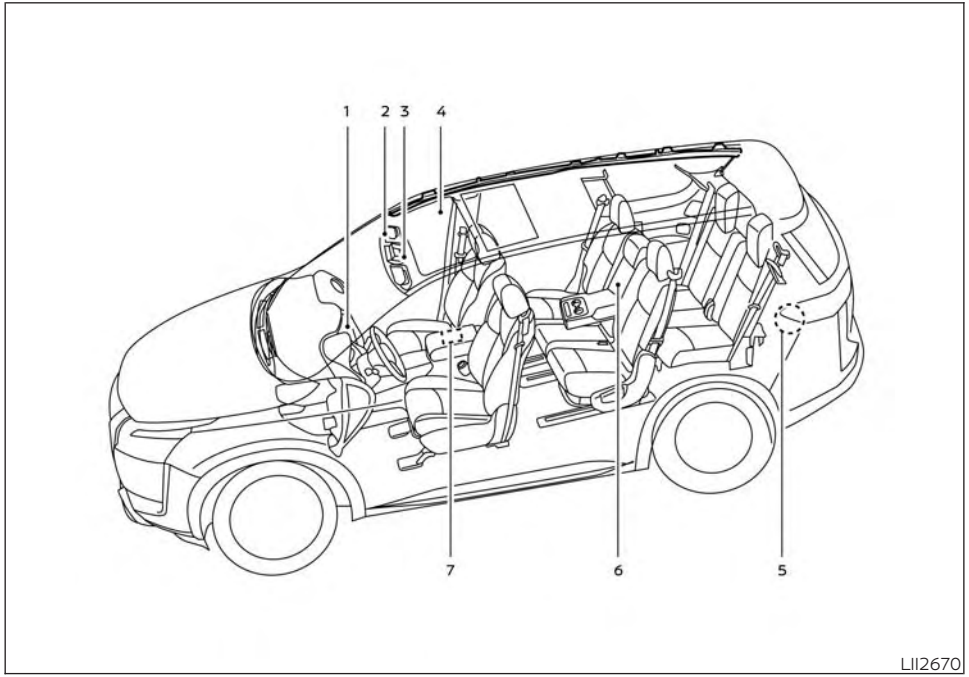

1. Glove box (P. 2-113)
2. Sun visors (P. 3-36)
3. Map lights (P. 2-127)
4. Power moonroof (if so equipped) (P. 2-124)
5. Luggage hooks (P. 2-119)
6. Cup holders (P. 2-116)
7. Console box (P. 2-114)

Refer to the page number indicated in parentheses for operating details.

INSTRUMENT PANEL

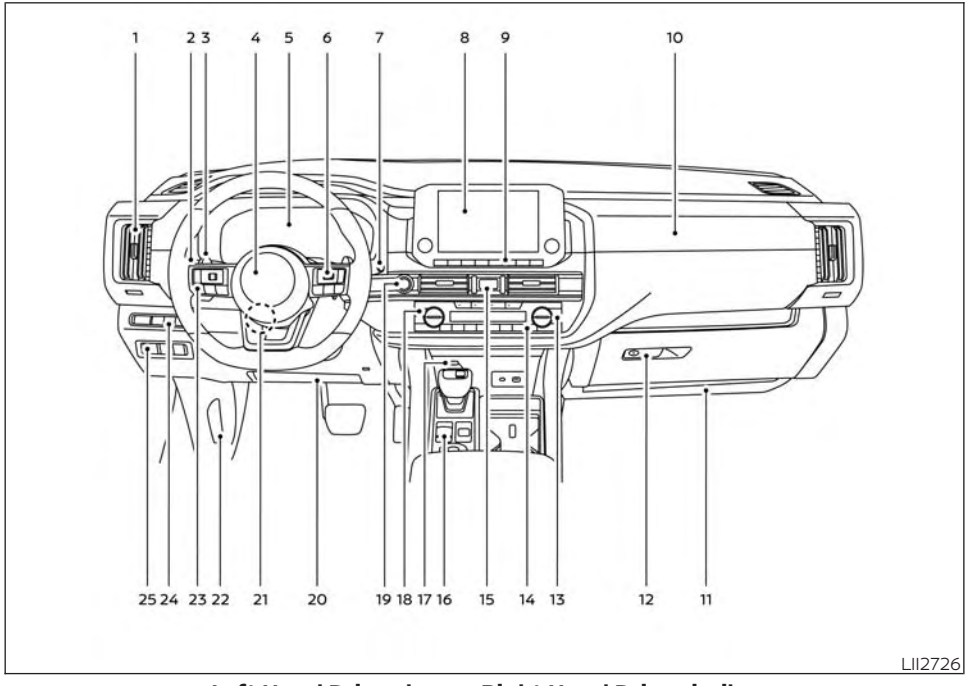

Left Hand Drive shown, Right Hand Drive similar

1. Vents (P. 4-31)
2. Headlight/fog light (if so equipped)/ turn signal switch (P. 2-83, 2-91)
3. Paddle shifter (P. 5-24)
4. Driver supplemental air bag (P. 1-80)
   Horn (P. 2-92)
5. Meters and gauges (P. 2-6)
   Warning and indicator lights (P. 2-12)
   Vehicle information display (P. 2-24 or 2-49)
6. Cruise control switches (if so equipped) (P. 5-103)
   ProPILOT Assist switches (if so equipped) (P. 5-133)
   Bluetooth® Hands-Free Phone System*
7. Wiper and washer switch (P. 2-79)
   Rear window wiper and washer switch (P. 2-82)
8. Center display*
   Navigation system* (if so equipped)
9. Audio controls*
10. Front passenger supplemental air bag (P. 1-80)
11. Front passenger supplemental knee air bag (if so equipped) (P. 1-98)
12. Glove box (P. 2-113)
13. Passenger heated seat switch (P. 2-93)
    Passenger climate-controlled seat switch (if so equipped) (P. 2-92)
14. Automatic heater and air conditioning controls (P. 4-32)
15. Hazard warning flasher switch (P. 6-2)
16. Electronic parking brake (P. 5-27)
    Automatic brake hold switch (P. 5-29)
17. Power outlet (P. 2-105)

18. Driver heated seat switch (P. 2-93)
    Driver climate-controlled seat switch (if so equipped) (P. 2-92)
19. Push-button ignition switch (P. 5-15)
20. Driver supplemental knee air bag (P. 1-98)
21. Tilt and telescopic steering wheel control (P. 3-34)
22. Hood release (P. 3-24)
23. Control panel and vehicle information display switches (P. 2-24, 2-49)
24. Liftgate instrument panel switch (P. 3-24)
    Steering Assist switch (if so equipped) (P. 2-95)
    Instrument brightness control switch (P. 2-90)
    Head Up Display (HUD) switch (if so equipped) (P. 2-97)
25. Manual headlight aiming switch (if so equipped) (P. 2-86)

*: Refer to the separate NissanConnect® Owner's Manual.

Refer to the page number indicated in parenthesis for operating details.

ENGINE COMPARTMENT CHECK LOCATIONS

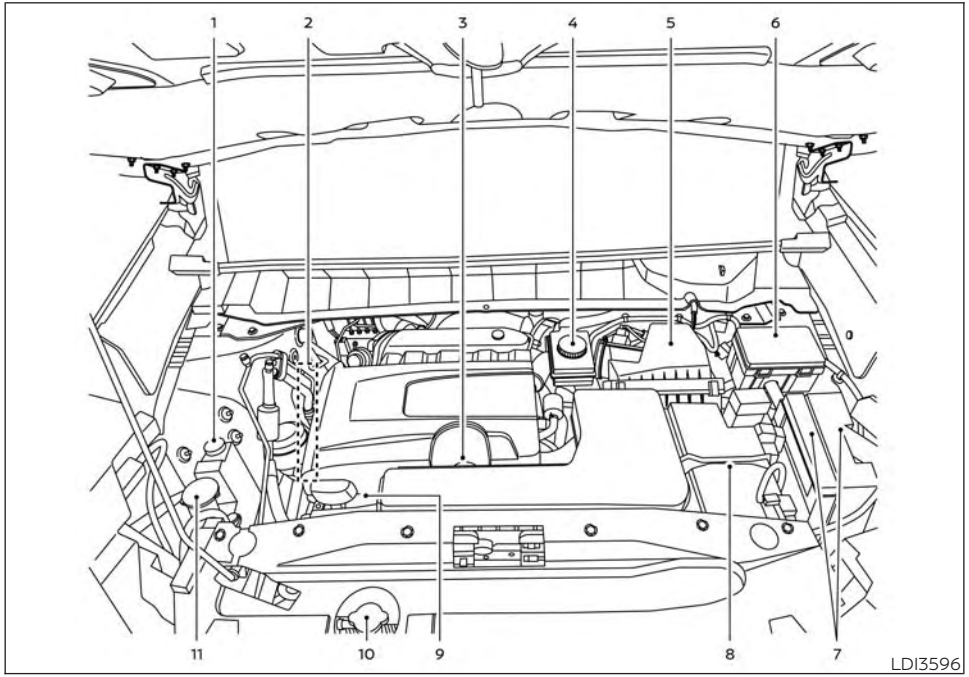

3.5L 6 cylinder (VQ35DD engine model) (LHD models only)

1. Engine coolant reservoir (P. 8-9)
2. Drive belt location (P. 8-20)
3. Engine oil filler cap (P. 8-11)
4. Brake fluid reservoir (P. 8-16)
5. Air cleaner (P. 8-22)
6. Fuse box (P. 8-26)
7. Fuse/Fusible link box (P. 8-26)
8. Battery (P. 8-18)
9. Engine oil dipstick (P. 8-11)
10. Radiator cap (P. 8-9)
11. Windshield-washer fluid reservoir (P. 8-16)

Refer to the page number indicated in parentheses for operating details.

NOTE:

Your vehicle may not be equipped with an engine cover.

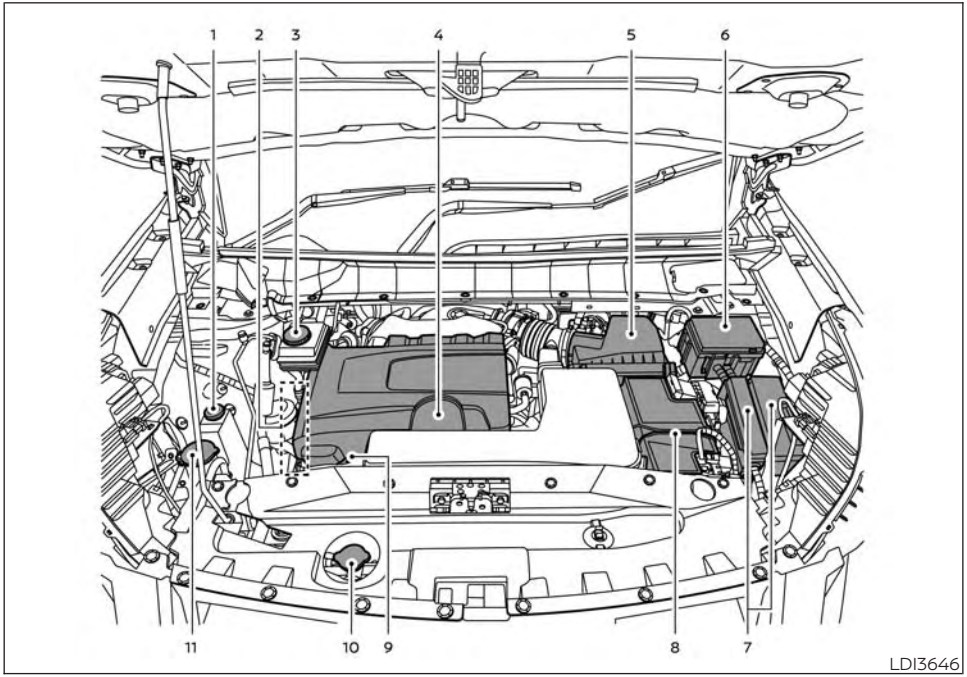

3.5L 6 cylinder (VQ35DD engine model) (RHD models only)

1. Engine coolant reservoir (P. 8-9)
2. Drive belt location (P. 8-20)
3. Brake fluid reservoir (P. 8-16)
4. Engine oil filler cap (P. 8-11)
5. Air cleaner (P. 8-22)
6. Fuse box (P. 8-26)
7. Fuse/Fusible link box (P. 8-26)
8. Battery (P. 8-18)
9. Engine oil dipstick (P. 8-11)
10. Radiator cap (P. 8-9)
11. Windshield-washer fluid reservoir (P. 8-16)

Refer to the page number indicated in parentheses for operating details.

NOTE:

Your vehicle may not be equipped with an engine cover.

WARNING AND INDICATOR LIGHTS

Warning/ Indicator light (red)	Name	Page
	Brake warning light	2-14
	Charge warning light	2-15
	Electric shift control system warning light (if so equipped)	2-15
	Electronic parking brake indicator light	2-15
	Engine oil pressure warning light (if so equipped)	2-15

Warning/ Indicator light (red)	Name	Page
	Master warning light (if so equipped)	2-16
	Seat belt warning light and chime (if so equipped)	2-16
	Steering Assist Hands Off warning light (if so equipped)	2-16
	Supplemental air bag warning light	2-16

Warning/ Indicator light (yellow)	Name	Page
	Anti-lock Braking System (ABS) warning light	2-17
	Electric power steering warning light	2-17
	Electronic parking brake warning light	2-18
	Front passenger air bag status light	2-18
	Front passenger air bag status light (if so equipped)	2-18

Warning/ Indicator light (yellow)	Name	Page
	Hill descent control system ON indicator light (if so equipped)	2-18
	Intelligent Emergency Braking system warning light (if so equipped)	2-18
	Intelligent Emergency Braking with Pedestrian Detection system warning light (if so equipped)	2-18

Warning/ Indicator light (yellow)	Name	Page
	Low tire pressure warning light (if so equipped)	2-19
	Malfunction Indicator Light (MIL) (if so equipped)	2-21
	Master warning light (if so equipped)	2-21
	Rear Automatic Braking (RAB) system warning light (if so equipped)	2-21

Warning/ Indicator light (yellow)	Name	Page
	Rear fog light indicator light (if so equipped)	2-21
	Slip indicator light	2-21
	Speed [120 km/h (75 mph)] warning light (if so equipped)	2-22
	Vehicle Dynamic Control (VDC) or Electronic Stability Program (ESP) OFF indicator light	2-22

Warning/ Indicator light (other)	Name	Page
	Automatic brake hold indicator light (white/green) (if so equipped)	2-22
	Front fog light indicator light (green) (if so equipped)	2-22
	High Beam Assist indicator light (green) (if so equipped)	2-23
	High beam indicator light (blue) (if so equipped)	2-23

Warning/ Indicator light (other)	Name	Page
	Side light and headlight indicator light (green) (if so equipped)	2-23
	Turn signal/ hazard indicator lights (green) (if so equipped)	2-23

MEMO

1 Safety-Seats, seat belts and supplemental restraint system

Seats 1-2
Front manual seat adjustment (passenger seat only (if so equipped)) 1-3
Front power seat adjustment (for driver's seat and if so equipped for passenger's seat) 1-4
2nd row seat adjustment 1-6
3rd row bench seat adjustment 1-9
Armrests 1-9
Flexible seating 1-10
Head restraints 1-12
Adjustable head restraint components 1-13
Non-adjustable head restraint components 1-14
Remove 1-14
Install 1-15
Adjust 1-16
Folding head restraint 1-18
Seat belts 1-19
Precautions on seat belt usage 1-19
Seat belt warning light and chime 1-22
Pregnant women 1-22
Injured persons 1-22
Three-point type seat belt with retractor 1-23
Seat belt extenders 1-29
Seat belt maintenance 1-29
Child safety (Type A) 1-29
Infants 1-30
Small children 1-30
Larger children 1-30
Child restraints (Type A) 1-31
Precautions on child restraints 1-31
LATCH (Lower Anchors and Tethers for CHildren) system 1-33
Rear-facing child restraint installation using LATCH 1-40
Rear-facing child restraint installation using the seat belts 1-42
Forward-facing child restraint installation using LATCH 1-45
Forward-facing child restraint installation using the seat belts 1-47
Installing top tether strap (2nd row captain's seat or bench seat) 1-51
Installing top tether strap (3rd row bench seat) 1-52
Child safety (Type B) 1-53
Infants 1-53
Small children 1-54
Larger children 1-54
Child restraints (Type B) 1-54
Precautions on child restraints 1-54

Universal child restraints for front seats and rear seats 1-57
ISOFIX child restraint system 1-62
Forward-facing child restraint installation using ISOFIX 1-64
Rear-facing child restraint installation using ISOFIX 1-66
Child restraint installation using the seat belts 1-68
Top tether strap child restraint 1-73
Booster seats 1-75
Precautions on booster seats 1-75
Booster seat installation 1-78
Supplemental Restraint System (SRS) 1-80
Precautions on SRS 1-80
Front, 2nd row outboard (if so equipped), and front central (if so equipped) seat-mounted side-impact supplemental air bag and roof-mounted curtain side-impact and rollover supplemental air bag systems 1-96
Driver and front passenger supplemental knee air bag (if so equipped) 1-98
Seat belt with pretensioner(s) front and 2nd row outboard seats (if so equipped) 1-100
Supplemental air bag warning labels (Type A) 1-101
Supplemental air bag warning labels Type B (if so equipped) 1-102
Supplemental air bag warning light 1-103

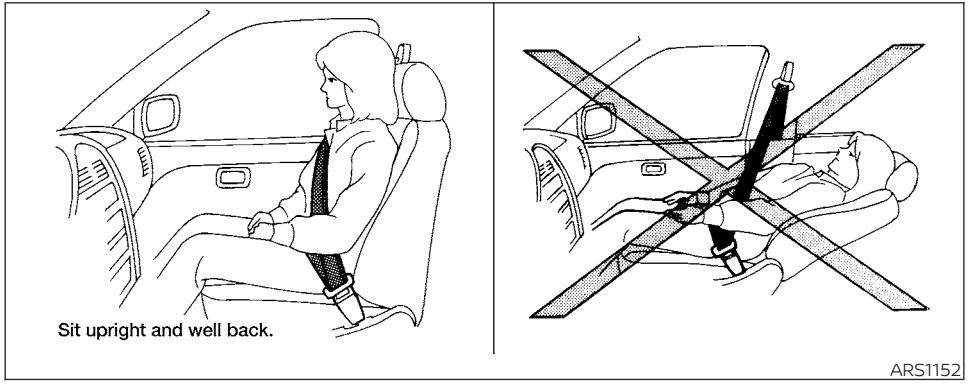

⚠WARNING

- **Do not ride in a moving vehicle when the seatback is reclined. This can be dangerous. The shoulder belt will not be against your body. In an accident, you could be thrown into it and receive neck or other serious injuries. You could also slide under the lap belt and receive serious internal injuries.**
- **For the most effective protection when the vehicle is in motion, the seat should be upright. Always sit well back and upright in the seat with both feet on the floor and adjust the seat properly. For additional information, see "Precautions on seat belt usage" (P. 1-19).**
- **After adjustment, gently rock in the seat to make sure it is securely locked.**
- **Do not leave children unattended inside the vehicle. They could unknowingly activate switches or controls or make the vehicle move. Unattended children could become involved in serious accidents.**
- **To help avoid risk of injury or death through unintended operation of the vehicle and/or its systems, do not leave children, people who require the assistance of others or pets unattended in your vehicle. Additionally, the temperature inside a closed vehicle on a warm day can quickly become high enough to cause a significant risk of injury or death to people and pets.**
- **Do not adjust the driver's seat while driving so full attention may be given to vehicle operation. The seat may move suddenly and could cause loss of control of the vehicle.**
- **The seatback should not be reclined any more than needed for comfort. Seat belts are most effective when the passenger sits well back and straight up in the seat. If the seatback is reclined, the risk of sliding under the lap belt and being injured is increased.**

⚠CAUTION

When adjusting the seat positions, be sure not to contact any moving parts to avoid possible injuries and/or damage.

FRONT MANUAL SEAT ADJUSTMENT (passenger seat only (if so equipped))

Your vehicle seats can be adjusted manually. For additional information about adjusting the seats, refer to the steps outlined in this section.

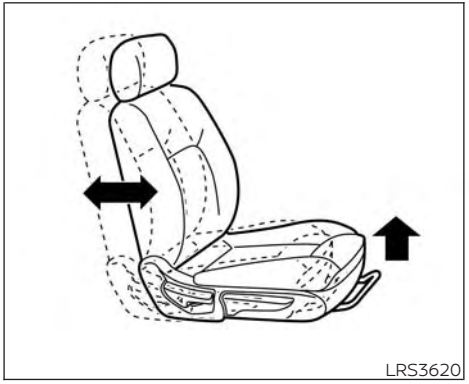
LRS3620

Forward and backward

Pull the center of the bar up and hold it while you slide the seat forward or backward to the desired position. Release the bar to lock the seat in position.

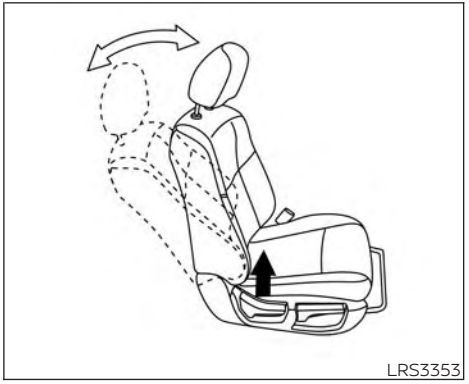
LRS3353

Reclining

To recline the seatback, pull the lever up and lean back. To bring the seatback forward, pull the lever up and lean your body forward. Release the lever to lock the seatback in position.

The reclining feature allows adjustment of the seatback for occupants of different sizes for added comfort and to help obtain proper seat belt fit. For additional information, see "Precautions on seat belt usage" (P. 1-19). Also, the seatback can be reclined to allow occupants to rest when the vehicle is parked.

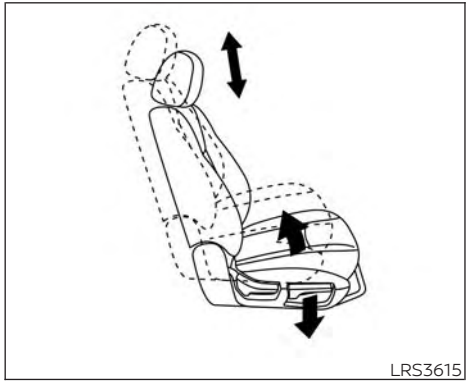
LRS3615

Seat lifter (if so equipped)

Pull up or push down the adjusting lever to adjust the seat height until the desired position is achieved.

FRONT POWER SEAT ADJUSTMENT (for driver's seat and if so equipped for passenger's seat)

Operating tips

- The power seat motor has an auto-reset overload protection circuit. If the motor stops during operation, wait 30 seconds then reactivate the switch.
- Do not operate the power seat switch for a long period of time when the engine is off. This will discharge the battery.

For additional information, see "Memory seat" (P. 3-47).

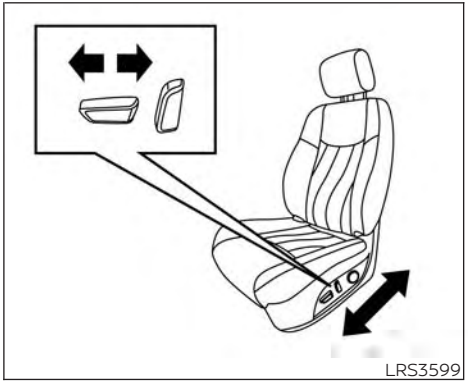
LRS3599

Forward and backward

Moving the switch as shown will slide the seat forward or backward to the desired position.

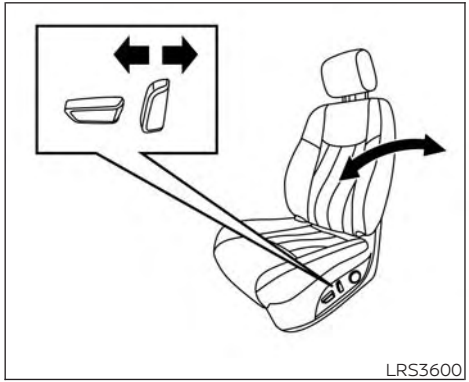

Reclining

Move the recline switch as shown until the desired angle is obtained.

The reclining feature allows adjustment of the seatback for occupants of different sizes for added comfort and to help obtain proper seat belt fit. For additional information, see "Precautions on seat belt usage" (P. 1-19). Also, the seatback can be reclined to allow occupants to rest when the vehicle is parked.

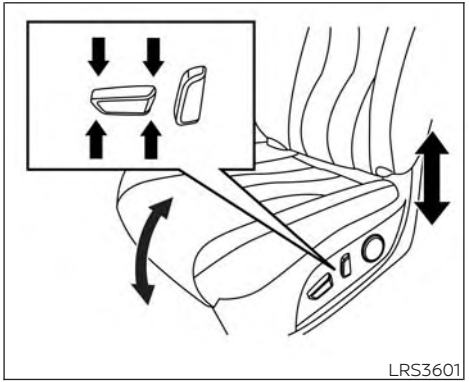

Seat lifter and tilt (driver's seat)

Move the front part of the switch as shown to adjust the angle of the seat cushion. Move the back part of the switch as shown to adjust the height of the seat.

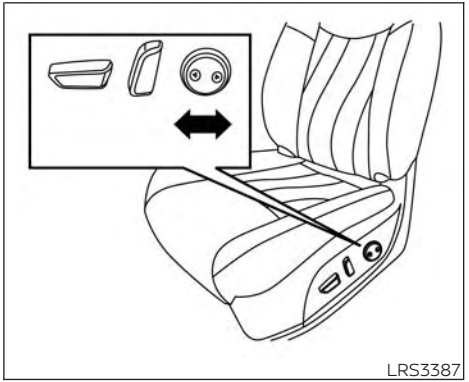

Power (Type A) (if so equipped)

Lumbar support

Move the switch up or down to adjust the height of the lumbar. Move the switch forward to increase the lumbar support or rearward to decrease the lumbar support.

NOTE:

Moving the switch forward increases the lumbar support on the last height activated position.

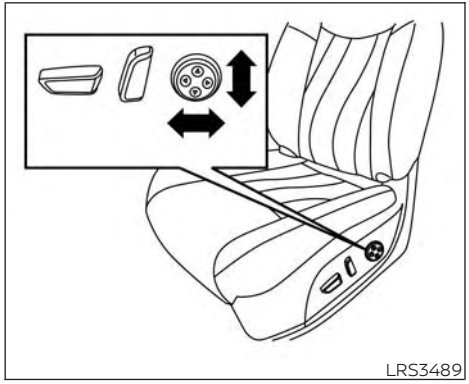

Power (Type B) (if so equipped)

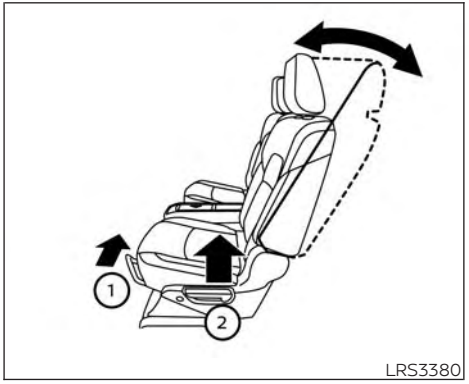

2nd row captain's seats (if so equipped)

2ND ROW SEAT ADJUSTMENT

Forward and backward

Pull the center of the bar ① up and hold it while you slide the seat forward or backward to the desired position. Release the bar to lock the seat in position.

Reclining

To recline the seatback, pull up on the lever ② and lean back. To bring the seatback forward, pull the lever ② up and lean your body forward. Release the lever to lock the seatback in position.

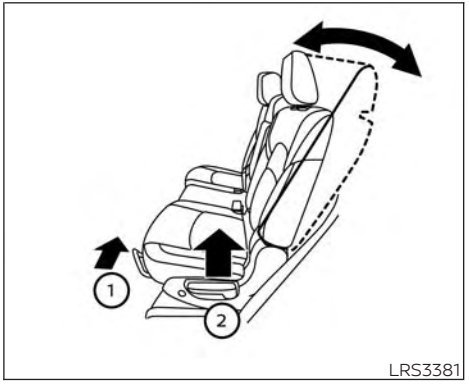

2nd row bench seats (if so equipped)

The recline feature allows adjustment of the seatback for occupants of different sizes for added comfort and to help obtain proper seat belt fit. For additional information, see "Precautions on seat belt usage" (P. 1-19). Also, the seatback can be reclined to allow occupants to rest when the vehicle is stopped and the shift position is in P (Park).

⚠WARNING

- **After adjustment, gently rock in the seat to make sure it is securely locked.**
- **Do not ride in a moving vehicle when the seatback is reclined. This can be dangerous. The shoulder belt will not be against your body. In an accident, you could be thrown into it and receive neck or other serious injuries. You could also slide under the lap belt and receive serious internal injuries.**
- **For the most effective protection when the vehicle is in motion, the seat should be upright. Always sit well back and upright in the seat and adjust the seat belt properly. For additional information, see "Precautions on seat belt usage" (P. 1-19).**

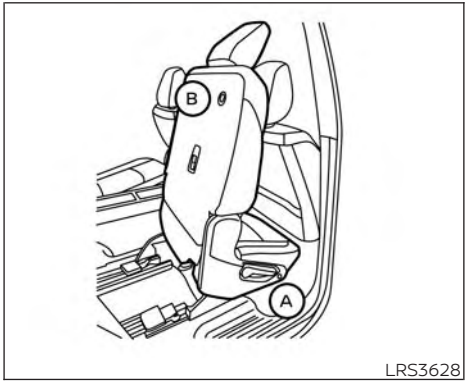

One touch walk-in function

The 3rd row can be accessed from outside the vehicle by using the seat release button located at the base of the 2nd row seat Ⓐ. The 3rd row occupant can exit their seat from inside the vehicle by using the secondary seat release button located on the back of the 2nd row seat Ⓑ. If a child safety seat is installed in the 2nd row seat, the 3rd row can be accessed without removing the child safety seat.

If the seat back is folded down, the one touch function will be disabled. To pitch the seat, you must return the seat back to the upright position.

Multi-mode

⚠WARNING

When returning the seat to its original position, confirm that the seat and seatback are locked properly.

⚠CAUTION

- **Be careful not to pinch your hand or foot or bump your head when operating the walk-in seat.**
- **Do not drive with the 2nd row seat tipped up.**
- **Be careful not to allow the 2nd row seat to pinch, hit any part of your body or other people when operating the 2nd row seat. Make sure the seat path and seatback is clear of all objects before moving the seat.**

To enter the 3rd row from outside the vehicle, push the seat release button located at the base of the 2nd row seat Ⓐ. To exit the 3rd row from inside the vehicle, push the seat release button located on the back of the 2nd row seat Ⓑ. Activating this seat release switch will pitch the 2nd row seat forward so you will be able to slide the seat forward and backward.

Slide the entire seat forward for access to the 3rd row.

To return the seat to a locked position, push the upper seatback rearward until the seat is locked.

Child seat access mode

The 2nd row seat can be slid forward for easy entry or exit from the 3rd row bench seat without a child safety seat being removed.

To enter the 3rd row from outside the vehicle, push the seat release button located at the base of the 2nd row seat Ⓐ. To exit the 3rd row from inside the vehicle, push the seat release button located on the back of the 2nd row seat Ⓑ. Activating this seat release button allows you to pitch and slide the seat forward and backward.

Slide the entire seat forward for access to the 3rd row seats.

To return the seat to a locked position, push the upper seatback rearward until the seat is locked.

⚠ WARNING

- **Do not leave a child in the child safety seat when operating the child seat access mode.**
- **The 2nd row one touch buttons are enabled during vehicles speeds less than 2 km/h (1.2 mph). If either button is pressed, the seat may unlatch even if the seat is occupied, and may move or pitch. If the seat is unlatched, occupant can be seriously injured during driving.**
- **To help avoid the risk of personal injury, supervise children, people who require the assistance of others, or pets occupying the 2nd and 3rd rows to prevent pressing the one touch buttons that operate the walk-in function.**
- **When returning the seat to its original position, confirm that the seat is locked properly.**

⚠ CAUTION

- **Be careful not to pinch your hand or foot or bump your head when operating the walk-in seat.**
- **Do not drive with the 2nd row seat tipped up.**
- **Be careful not to allow the 2nd row seat to pinch, hit any part of your body or other people when operating the 2nd row seat. Make sure the seat path is clear of all objects before moving the seat.**

Exiting the 3rd row

To exit the 3rd row from either seating position, push the seatback release button. This will release the seat, then slide the entire seat forward.

The seatback release button will not operate while the vehicle is moving.

To return the seat to a locked position, push the upper seatback rearward until the seat and track are locked.

⚠ WARNING

When returning the seat to its original position, confirm that the seat and seatback are locked properly.

⚠ CAUTION

Be careful not to pinch your hand or foot or bump your head when operating the walk-in seat.

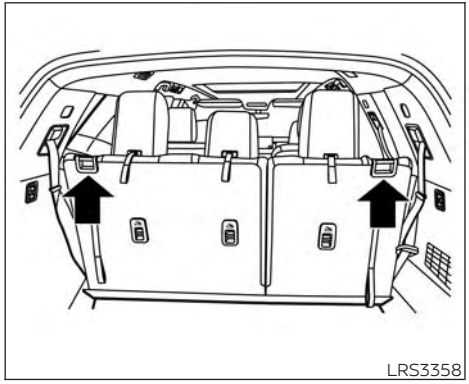
LRS3358

3RD ROW BENCH SEAT ADJUSTMENT

Reclining

To recline the seatback, pull up on the latch located on the outside corner of each seatback. Lean back until the desired angle is obtained.

To bring the seatback forward again, pull up on the latch and pull the seatback upright until the desired angle is obtained.

The recline feature allows adjustment of the seatback for occupants of different sizes for added comfort and to help obtain proper seat belt fit. For additional information, see "Precautions on seat belt usage" (P. 1-19). Also, the seatback can be reclined to allow occupants to rest when the vehicle is stopped and the shift position is in P (Park).

⚠WARNING

- **After adjustment, gently rock in the seat to make sure it is securely locked.**
- **Do not ride in a moving vehicle when the seatback is reclined. This can be dangerous. The shoulder belt will not be against your body. In an accident, you could be thrown into it and receive neck or other serious injuries. You could also slide under the lap belt and receive serious internal injuries.**
- **For the most effective protection when the vehicle is in motion, the seat should be upright. Always sit well back and upright in the seat and adjust the seat belt properly. For additional information, see "Precautions on seat belt usage" (P. 1-19).**

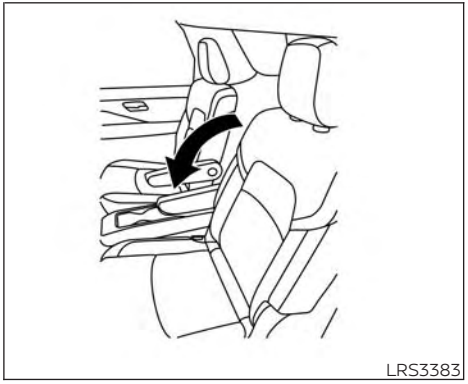
LRS3383

2nd row captain's seats (if so equipped)

ARMRESTS

The 2nd row bench seat or the 2nd row captain's seats come equipped with armrest(s). Pull the armrest down as shown.

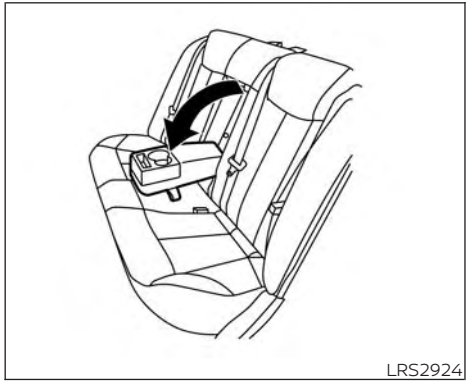

2nd row bench seats (if so equipped)

FLEXIBLE SEATING

⚠WARNING

- **Never allow anyone to ride in the cargo area or on the rear seats when they are in the fold-down position. In a collision, people riding in these areas without proper restraints are more likely to be seriously injured or killed.**
- **When folding the bench seat seatback down for maximum storage, make sure the seat base is in the latched position by rocking the seat base. If the seat base is not properly secured, cargo stored on top of a folded seatback may become a projectile causing personal injury or vehicle damage.**
- **Do not allow people to ride in any area of your vehicle that is not equipped with seats and seat belts. Be sure everyone in your vehicle is in a seat and using a seat belt properly.**
- **Do not fold down the rear seats when occupants are in the rear seat area or any luggage is on the rear seats.**
- **Head restraints should be adjusted properly as they may provide significant protection against injury in an accident. Always replace and adjust them properly if they have been removed for any reason.**
- **If the head restraints are removed for any reason, they should be securely stored to prevent them from causing injury to passengers or damage to the vehicle in case of sudden braking or an accident.**
- **When returning the seatbacks to the upright position, be certain they are completely secured in the latched position. If they are not completely secured, passengers may be injured in an accident or sudden stop.**
- **Properly secure all cargo to help prevent it from sliding or shifting. Do not place cargo higher than the seatbacks. In a sudden stop or collision, unsecured cargo could cause personal injury.**

⚠CAUTION

- **When folding the 2nd row seat for maximum cargo holding, be sure that the cargo does not contact the center console of the captain's seat (if so equipped) to avoid possible damage to the console.**
- **When folding or returning the seat(s) to the upright position, to avoid injury to yourself and others:**
  - **Make sure that the seat path is clear before moving the seat.**
  - **Be careful not to allow hands or feet to get caught or pinched in the seat.**

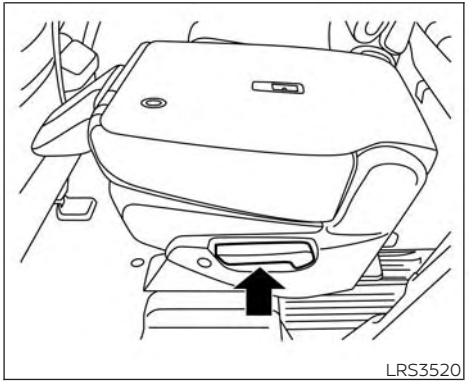

2nd row captain's seats (if so equipped)

Folding the 2nd row seats

To fold the 2nd row seats flat for maximum cargo hauling:

1. Make sure that the head restraints are lowered or removed. To remove the head restraint, push and hold the lock knob while moving the head restraint in an upward direction. Store the head restraint properly so it is not loose in the vehicle.

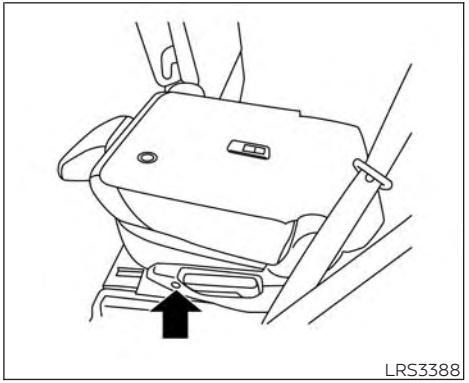

2nd row bench seats (if so equipped)

2. Stow the 2nd row seat belts in the seat belt hooks found on the sides of the vehicle.
3. Lift up on the recline lever on the side of the outboard seats to fold the seatbacks flat. The seatback will lock into place when in cargo mode to optimize the load floor.
4. To return the 2nd row seats to a seating position, lift up on the recline lever on the side of the outboard seats and push up on the seatback until it latches in place.

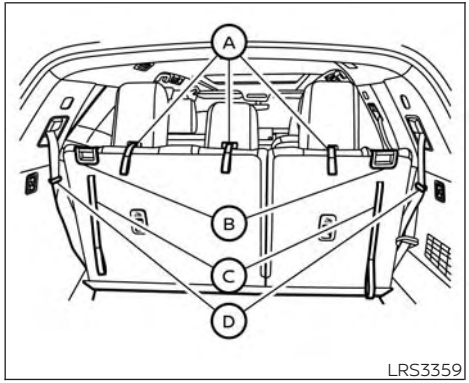

LRS3359

Folding the 3rd row seats

To fold the 3rd row seats flat for maximum cargo capacity:

1. Pull the strap Ⓐ to release the head restraint forward.
2. Stow the 3rd row seat belts in the seat belt hooks Ⓓ found on the sides of the cargo area.
3. Pull up on the latch Ⓑ located in the upper corner of each seatback and lower the seatback forward over the seat base.

To return the 3rd row seats to a seating position:

1. Use the pull straps Ⓒ to raise each seatback. Pull back until the seatback latches into position. **Make sure to properly raise each seatback to an upright and secured position.**
2. Do not use the pull strap to return the head restraint to the upright position. Pull back on the head restraint until it latches in the upright position.

⚠WARNING

When the seat is returned to the normal seating position, the head restraints must be returned to the upright position to properly protect vehicle occupants.

⚠CAUTION

- **When folding the 2nd row seat for maximum cargo holding, be sure that the console does not contact the center console of the captain's seat (if so equipped) to avoid possible damage to the console.**

⚠WARNING

Head restraints supplement the other vehicle safety systems. They may provide additional protection against injury in certain rear end collisions. Adjustable head restraints must be adjusted properly, as specified in this section. Check the adjustment after someone else uses the seat. Do not attach anything to the head restraint stalks or remove the head restraint. Do not use the seat if the head restraint has been removed. If the head restraint was removed, reinstall and properly adjust the head restraint before an occupant uses the seating position. Failure to follow these instructions can reduce the effectiveness of the head restraints. This may increase the risk of serious injury or death in a collision.

- Your vehicle is equipped with a head restraint that may be integrated, adjustable or non-adjustable.
- Adjustable head restraints have multiple notches along the stalk to lock them in a desired adjustment position.

- The non-adjustable head restraints have a single locking notch to secure them to the seat frame.
- Proper Adjustment:
  - For the adjustable type, align the head restraint so the center of your ear is approximately level with the center of the head restraint.
  - If your ear position is still higher than the recommended alignment, place the head restraint at the highest position.
- If the head restraint has been removed, ensure that it is reinstalled and locked in place before riding in that designated seating position.

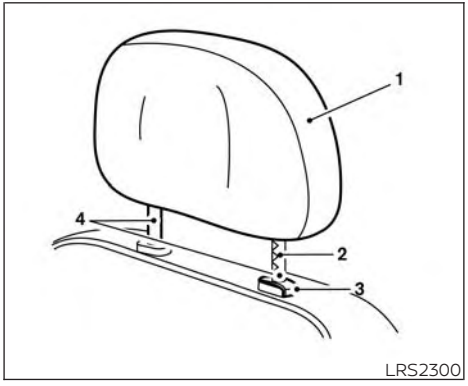

Type A (if so equipped)

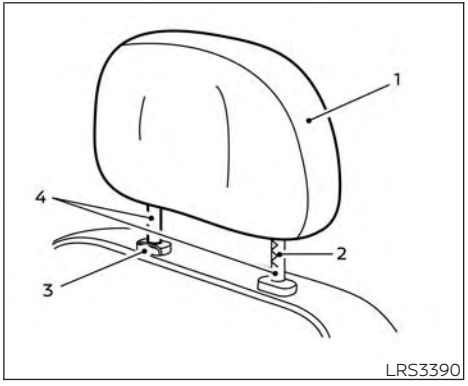

Type B (if so equipped)

ADJUSTABLE HEAD RESTRAINT COMPONENTS

1. Removable head restraint
2. Multiple notches
3. Lock knob
4. Stalks

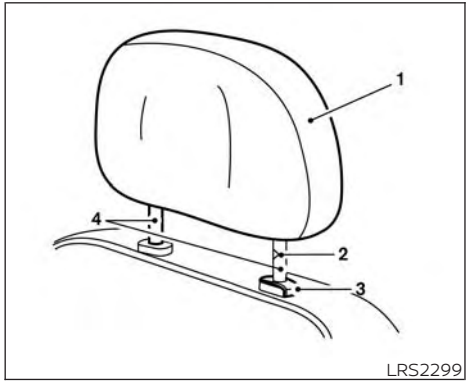

Type A (if so equipped)

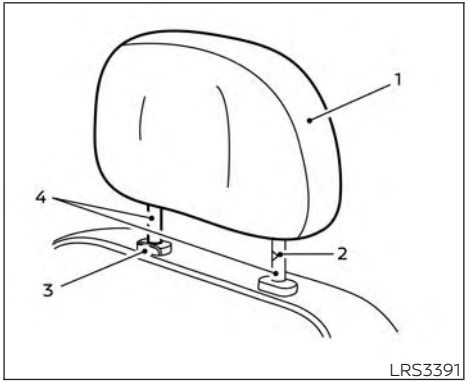

Type B (if so equipped)

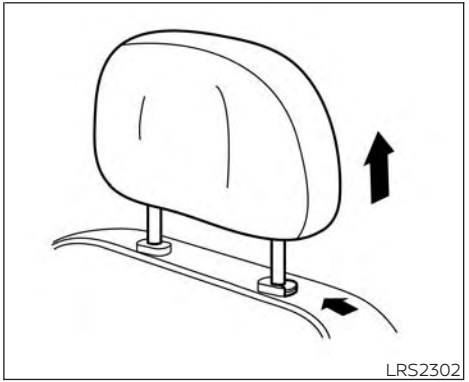

Type A (if so equipped)

NON-ADJUSTABLE HEAD RESTRAINT COMPONENTS

1. Removable head restraint
2. Single notch
3. Lock knob
4. Stalks

REMOVE

Use the following procedure to remove the head restraint:

1. Pull the head restraint up to the highest position.
2. Push and hold the lock knob.
3. Remove the head restraint from the seat.

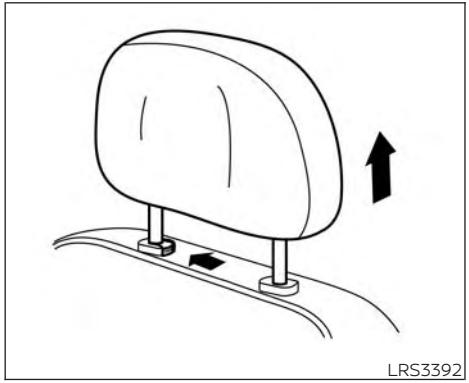

Type B (if so equipped)

4. Store the head restraint properly in a secure place so it is not loose in the vehicle.
5. Reinstall and properly adjust the head restraint before an occupant uses the seating position.

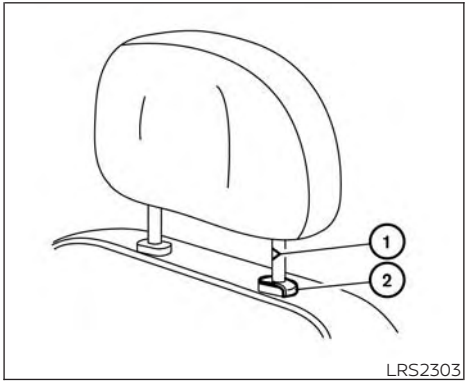

Type A (if so equipped)

INSTALL

1. Align the head restraint stalks with the holes in the seat. Make sure that the head restraint is facing the correct direction. The stalk with the notch (notches) ① must be installed in the hole with the lock knob ②.
2. Push and hold the lock knob and push the head restraint down.
3. Properly adjust the head restraint before an occupant uses the seating position.

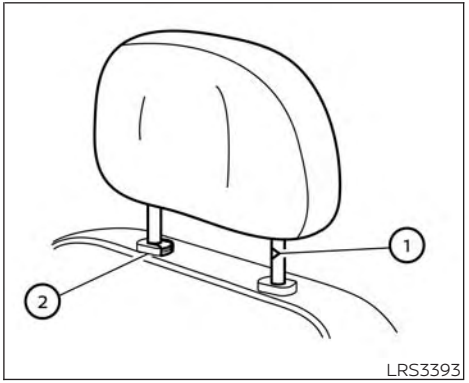

Type B (if so equipped)

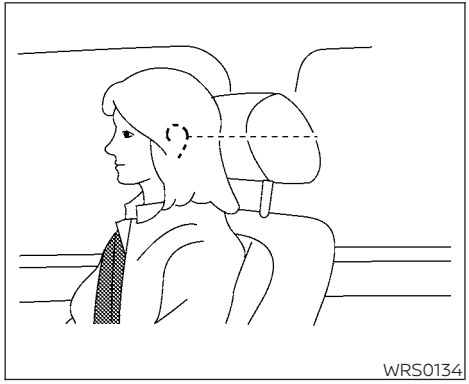

ADJUST

For adjustable head restraint

Adjust the head restraint so the center is level with the center of your ears. If your ear position is still higher than the recommended alignment, place the head restraint at the highest position.

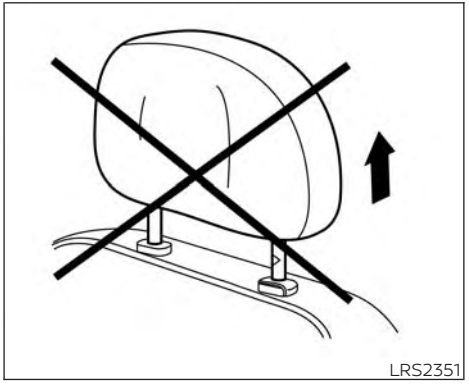

Type A (if so equipped)

For non-adjustable head restraint.

Make sure the head restraint is positioned so the lock knob is engaged in the notch before riding in that designated seating position.

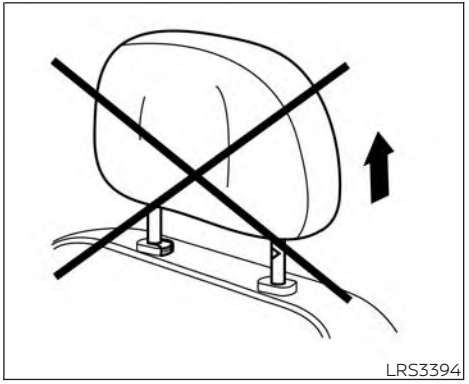

Type B (if so equipped)

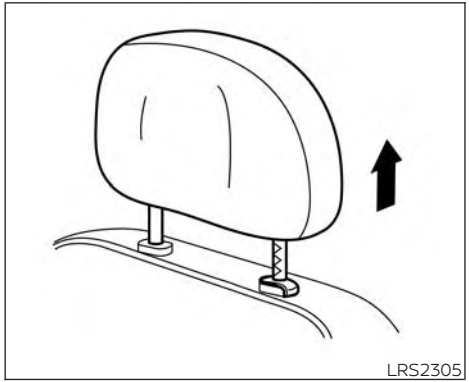

Type A (if so equipped)

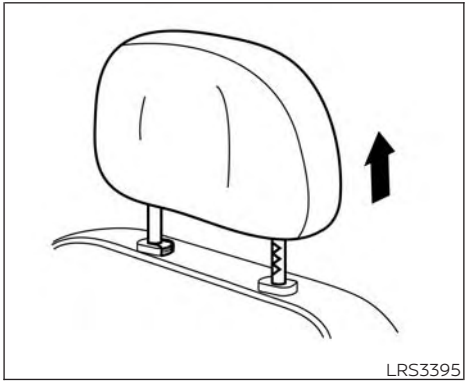

Type B (if so equipped)

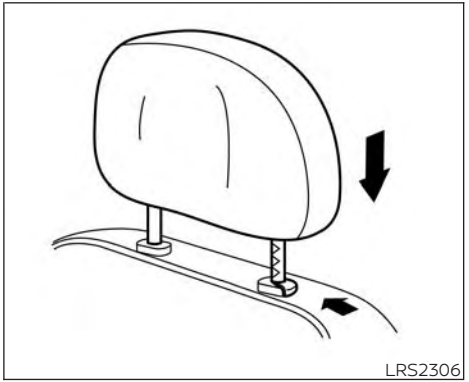

Type A (if so equipped)

Raise

To raise the head restraint, pull it up.

Make sure the head restraint is positioned so the lock knob is engaged in the notch before riding in that designated seating position.

Lower

To lower, push and hold the lock knob and push the head restraint down.

Make sure the head restraint is positioned so the lock knob is engaged in the notch before riding in that designated seating position.

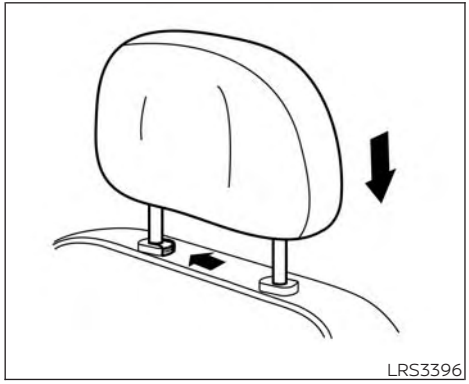

Type B (if so equipped)

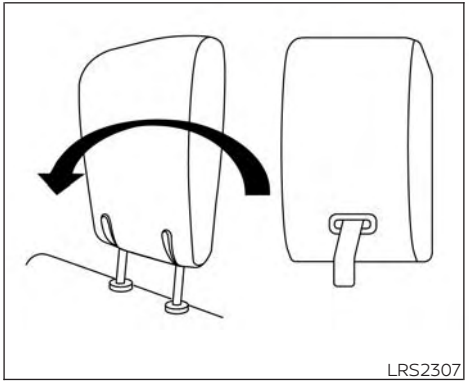

FOLDING HEAD RESTRAINT

To fold the head restraint, pull the strap located on the rear of the head restraint.

If the head restraint has been folded, make sure that it is returned to the upright position.

Make sure the head restraint is positioned so the lock knob(s) are engaged in the notch(es) before riding in that designated seating position.

⚠WARNING

When the seat is returned to the normal seating position, the head restraint must be returned to the upright position to properly protect vehicle occupants.

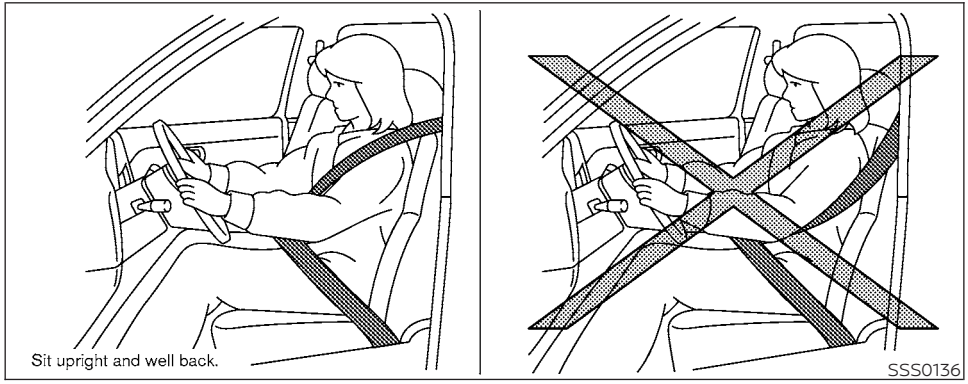

PRECAUTIONS ON SEAT BELT USAGE

If you are wearing your seat belt properly adjusted and you are sitting upright and well back in your seat with both feet on the floor, your chances of being injured or killed in a collision and/or the severity of injury may be greatly reduced. NISSAN strongly encourages you and all of your passengers to buckle up every time you drive, even if your seating position includes a supplemental air bag.

Some states, provinces or territories require that seat belts be worn at all times when a vehicle is being driven.

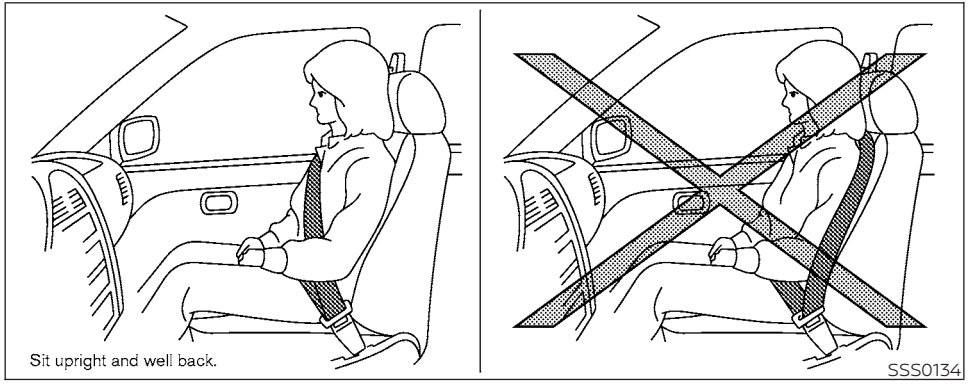

⚠WARNING

- **Every person who drives or rides in this vehicle should use a seat belt at all times. Children should be in the rear seats and in an appropriate restraint.**

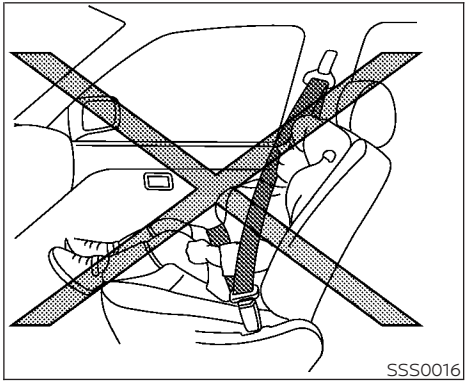

⚠WARNING

- **The seat belt should be properly adjusted to a snug fit. Failure to do so may reduce the effectiveness of the entire restraint system and increase the chance or severity of injury in an accident. Serious injury or death can occur if the seat belt is not worn properly.**

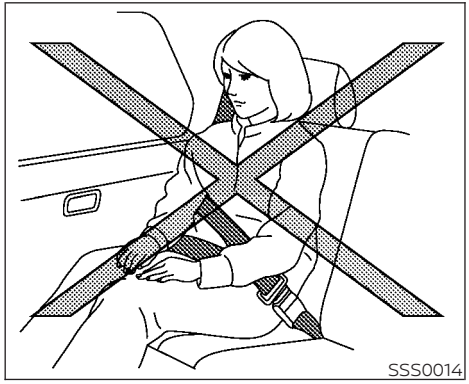
SSS0014

⚠WARNING

- **Always route the shoulder belt over your shoulder and across your chest. Never put the belt behind your back, under your arm or across your neck. The belt should be away from your face and neck, but not falling off your shoulder.**
- **Position the lap belt as low and snug as possible AROUND THE HIPS, NOT THE WAIST. A lap belt worn too high could increase the risk of internal injuries in an accident.**
- **Be sure the seat belt tongue is securely fastened to the proper buckle.**
- **Do not wear the seat belt inside out or twisted. Doing so may reduce its effectiveness.**
- **Do not allow more than one person to use the same seat belt.**
- **Never carry more people in the vehicle than there are seat belts.**
- **If the seat belt warning light glows continuously or chime continues while the ignition is turned ON with all doors closed and all seat belts fastened, it may indicate a malfunction in the system. Have the system checked. It is recommended that you visit a NISSAN dealer for this service.**
- **No changes should be made to the seat belt system. For example, do not modify the seat belt, add material, or install devices that may change the seat belt routing or tension. Doing so may affect the operation of the seat belt system. Modifying or tampering with the seat belt system may result in serious personal injury.**
- **Once seat belt pretensioner(s) have activated, they cannot be reused and must be replaced together with the retractor. It is recommended that you visit a NISSAN dealer for this service.**
- **All seat belt assemblies, including retractors and attaching hardware, should be inspected after any collision. It is recommended that you visit a NISSAN dealer for this service. NISSAN recommends that all seat belt assemblies in use during a collision be replaced unless the collision was minor and the belts show no damage and continue to operate properly. Seat belt assemblies not in use during a collision should also be inspected and replaced if either damage or improper operation is noted.**
- **All child restraints and attaching hardware should be inspected after any collision. Always follow the restraint manufacturer's inspection instructions and replacement recommendations. The child restraints should be replaced if they are damaged.**


LRS0786

SEAT BELT WARNING LIGHT AND CHIME

The light and chime remind you to fasten the driver, front passenger and rear passenger seat belts. A visual and audible alert will operate in the following conditions:

- If the driver seat belt is not fastened.
- The front passenger's seat belt is not fastened and the seat is occupied by a passenger for 7 seconds after the ignition switch is placed in the ON position.
- The front passenger's seat belt is not fastened and objects or external force on the passenger seat change the seat belt reminder classification to "occupied".
- Any rear passenger seat belt is operated from fastened to unfastened.

For additional information, see:

- "Seat belt warning light and chime" (P. 2-16).
- "Rear seat belt warning" (P. 2-43 or 2-71).

The below situations could result in the seat belt warning function operating, even with no occupant present in the front passenger seat:

- Heavy objects placed on the seat.
- Someone pushing or pulling on the front passenger seat.
- An object placed under the front passenger seat.
- An object placed between the seat cushion and center console or between the seat cushion and the door.
- An object hanging on the seat or placed in the seatback pocket.
- A child restraint or other object pressing against the rear of the seatback.

The rear seat belt reminder may operate if the rear seat belts are used without occupants.

PREGNANT WOMEN

NISSAN recommends that pregnant women use seat belts. The seat belt should be worn snug and always position the lap belt as low as possible around the hips, not the waist. Place the shoulder belt over your shoulder and across your chest. Never run the lap/shoulder belt over your abdominal area. Contact your doctor for specific recommendations.

INJURED PERSONS

NISSAN recommends that injured persons use seat belts. Check with your doctor for specific recommendations.

THREE-POINT TYPE SEAT BELT WITH RETRACTOR

⚠WARNING

- **Every person who drives or rides in this vehicle should use a seat belt at all times. Children should be in the rear seats and in an appropriate restraint.**
- **Do not ride in a moving vehicle when the seatback is reclined. This can be dangerous. The shoulder belt will not be against your body. In an accident, you could be thrown into it and receive neck or other serious injuries. You could also slide under the lap belt and receive serious internal injuries.**
- **For the most effective protection when the vehicle is in motion, the seat should be upright. Always sit well back and upright in the seat with both feet on the floor and adjust the seat belt properly.**
- **Do not allow children to play with the seat belts. Most seating positions are equipped with Automatic Locking Retractor (ALR) mode seat belts. If the seat belt becomes wrapped around a child's neck with the ALR mode activated, the child can be seriously injured or killed if the seat belt retracts and becomes tight. This can occur even if the vehicle is parked. Unbuckle the seat belt to release the child. If the seat belt cannot be unbuckled or is already unbuckled, release the child by cutting the seat belt with a suitable tool (such as a knife or scissors) to release the seat belt.**

Fastening the seat belts

1. Adjust the seat. For additional information, see "Seats" (P. 1-2).



LRS2674

2. Slowly pull the seat belt out of the retractor and insert the tongue into the buckle Ⓐ until you hear and feel the latch engage.
   - **The retractor is designed to lock during a sudden stop or on impact. A slow pulling motion permits the seat belt to move and allows you some freedom of movement in the seat.**
   - **If the seat belt cannot be pulled from its fully retracted position, firmly pull the belt and release it. Then smoothly pull the belt out of the retractor.**

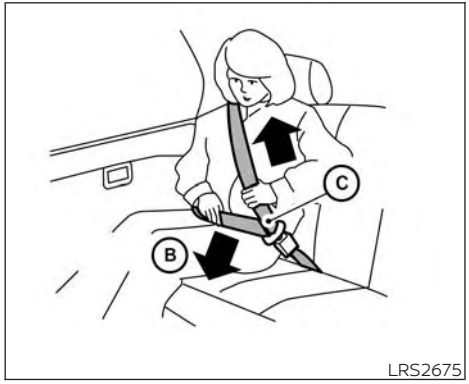

LRS2675

3. Position the lap belt portion **low and snug on the hips** Ⓑ as shown.
4. Pull the shoulder belt portion toward the retractor to take up extra slack Ⓒ. Be sure the shoulder belt is routed over your shoulder and across your chest.

The front passenger seat and the rear seating positions three-point seat belts have two modes of operation:

- Emergency Locking Retractor (ELR)
- Automatic Locking Retractor (ALR)

The ELR mode allows the seat belt to extend and retract to allow the driver and passengers some freedom of movement in the seat. The ELR locks the seat belt when the vehicle slows down rapidly or during certain impacts.

The ALR mode (child restraint mode) locks the seat belt for child restraint installation.

When the ALR mode is activated, the seat belt cannot be extended again until the seat belt tongue is detached from the buckle and fully retracted. The seat belt returns to the ELR mode after the seat belt fully retracts.

The ALR mode should be used only for child restraint installation. During normal seat belt use by an occupant, the ALR mode should not be activated. If it is activated, it may cause uncomfortable seat belt tension. It can also change the operation of the front passenger air bag. For additional information, see "Front passenger air bag and status light" (P. 1-91).

⚠WARNING

When fastening the seat belts, be certain that the seatbacks are completely secured in the latched position. If they are not completely secured, passengers may be injured in an accident or sudden stop.

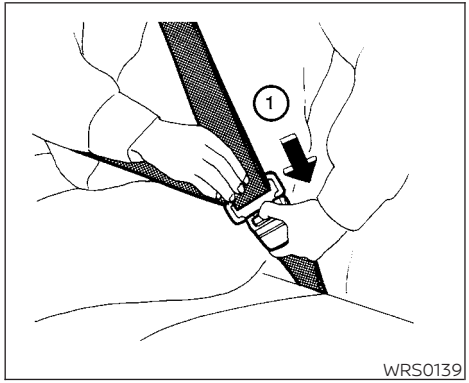

Unfastening the seat belts

To unfasten the seat belt, press the button on the buckle ①. The seat belt automatically retracts.

Checking seat belt operation

Seat belt retractors are designed to lock seat belt movement by two separate methods:

- When the seat belt is pulled quickly from the retractor
- When the vehicle slows down rapidly

To increase your confidence in the seat belts, check the operation as follows:

- Grasp the shoulder belt and pull forward quickly. The retractor should lock and restrict further belt movement.

If the retractor does not lock during this check, get the system checked. It is recommended that you visit a NISSAN dealer for this service, or to learn more about seat belt operation.

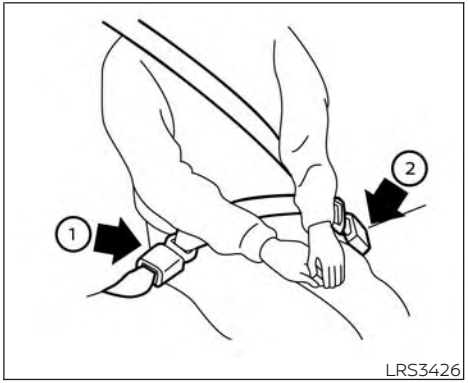

Center of the 3rd row bench seat

The 3rd row center seat belt has a connector tongue ① and a seat belt tongue ②. Both the connector tongue and the seat belt tongue must be securely latched for proper seat belt operation.

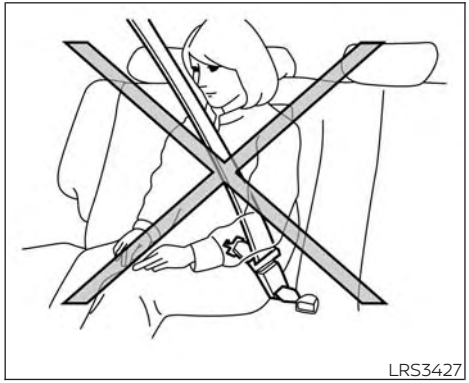
LRS3427

⚠ WARNING

- **Always fasten the connector tongue and the seat belt in the order shown.**
- **Always make sure both the connector tongue and the seat belt tongue are secured when using the seat belt or installing a child restraint. Do not use the seat belt or child restraint with only the seat belt tongue attached. This could result in serious personal injury in case of an accident or a sudden stop.**

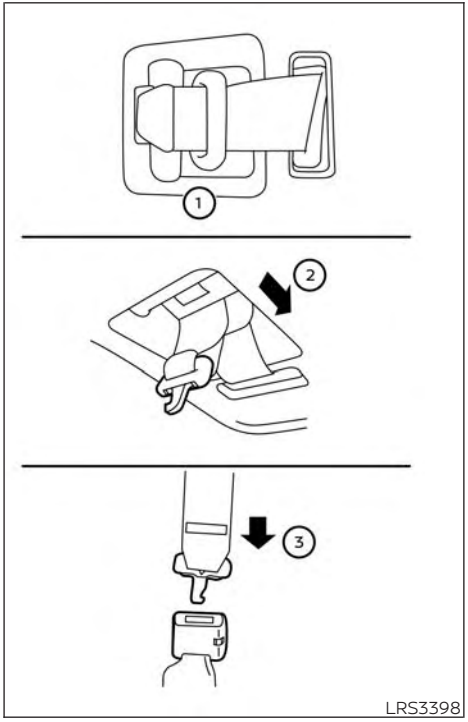

LRS3398

Attaching the 3rd row center seat belt

Always be sure the 3rd row center seat belt connector tongue and connector buckle are attached. Disconnect only when folding down the 3rd row seat.

To connect the buckle:

1. Pull out the connector tongue from the retractor base ①.
2. Pull out the seat belt tongue from the retractor base ②.
3. Pull the seat belt and secure the connector buckle until it clicks ③.

The 3rd row center seat belt connector tongue can be attached only into the 3rd row center seat belt connector buckle.

To fasten the seat belt, see "Fastening the seat belts" (P. 1-23).

⚠ WARNING

- **Do not unfasten the 3rd row center seat belt connector except when folding down the 3rd row seat.**
- **When attaching the 3rd row center seat belt connector, be certain that the seatbacks are completely secured in the latched position and the 3rd row center seat belt connector is completely secured.**
- **If the 3rd row center seat belt connector and the seatbacks are not secured in the correct position, serious personal injury may result in an accident or sudden stop.**

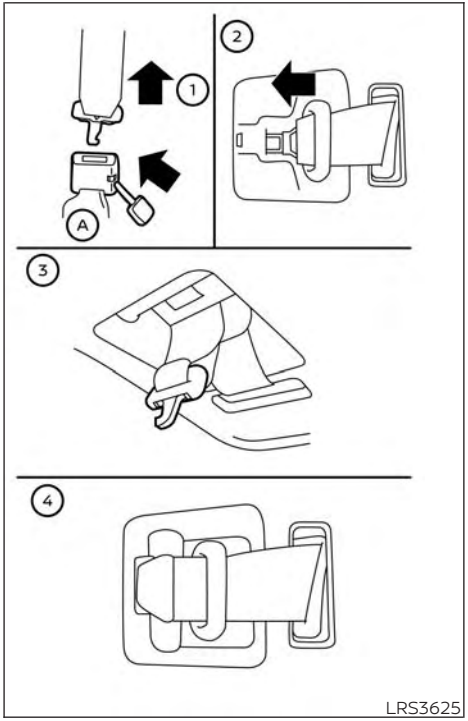

LRS3625

Stowing the 3rd row center seat belt

When folding down the 3rd row seat, the center seat belt can be retracted into a stowed position as follows:

1. Hold the connector tongue ① so that the seat belt does not retract suddenly when the tongue is released from the connector buckle. Release the connector tongue by inserting a suitable tool such as a key Ⓐ into the connector buckle.
2. Insert the seat belt tongue into the retractor base first ② by inserting the seat belt tongue into the uppermost hole of the retractor base.
3. Make sure the seat belt tongue is fully seated③. An audible click indicates it is properly attached.
4. Then secure the connector tongue into the retractor base ④ by inserting the connector tongue to the lower hole of the retractor base.

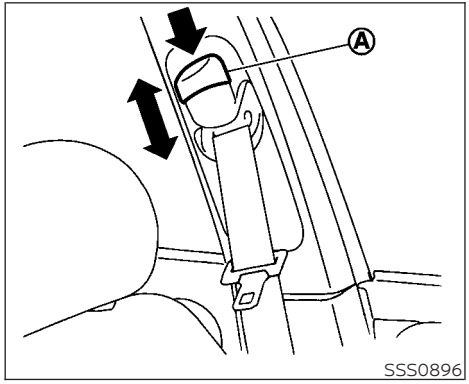

Ⓐ Shoulder belt height adjust button

Shoulder belt height adjustment (front seats)

The shoulder belt anchor height should be adjusted to the position best for you. For additional information, see "Precautions on seat belt usage" (P. 1-19).

To adjust, press the button Ⓐ and then move the shoulder belt anchor to the desired position so that the belt passes over the center of the shoulder. The belt should be away from your face and neck, but not falling off of your shoulder. Release the adjustment button to lock the shoulder belt anchor into position.

⚠WARNING

- **After adjustment, release the adjustment button and try to move the shoulder belt anchor up and down to make sure it is securely fixed in position.**
- **The shoulder belt anchor height should be adjusted to the position best for you. Failure to do so may reduce the effectiveness of the entire restraint system and increase the chance or severity of injury in an accident.**
- **The shoulder belt should rest on the middle of the shoulder. It must not rest against the neck.**
- **Be sure that the seat belt is not twisted in any way.**
- **Be sure that the shoulder belt anchor is secured by trying to move the shoulder belt anchor up and down after adjustment.**

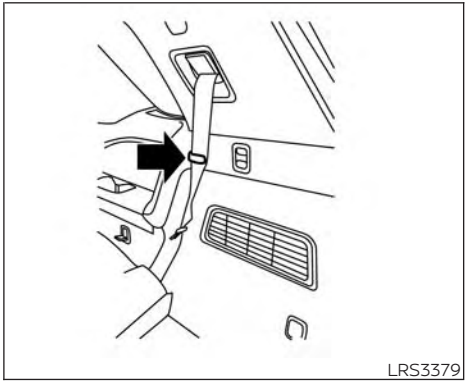

3rd row shown; 2nd row similar

Seat belt hook

When the seat belt is not in use and when folding down the rear seats, hook the rear seat belts on the seat belt hooks.

SEAT BELT EXTENDERS

If, because of body size or driving position, it is not possible to properly fit the lap/shoulder belt and fasten it, an extender that is compatible with the installed seat belts is available for purchase. The extender adds approximately 8 in (200 mm) of length and are available for the:

- Driver and front passenger seating position
- 2nd and 3rd row seating position

It is recommended that you visit a NISSAN dealer for assistance with purchasing an extender if an extender is required.

⚠WARNING

- **Only NISSAN seat belt extenders, made by the same company which made the original equipment seat belts, should be used with NISSAN seat belts.**
- **Adults and children who can use the standard seat belt should not use an extender. Such unnecessary use could result in serious personal injury in the event of an accident.**
- **Never use seat belt extenders to install child restraints. If the child restraint is not secured properly, the child could be seriously injured or killed in a collision or a sudden stop.**

SEAT BELT MAINTENANCE

- **To clean the seat belt webbing,** apply a mild soap solution or any solution recommended for cleaning upholstery or carpet. Then wipe with a cloth and allow the seat belts to dry in the shade. Do not allow the seat belts to retract until they are completely dry.
- **If dirt builds up in the shoulder belt guide of the seat belt anchors,** the seat belts may retract slowly. Wipe the shoulder belt guide with a clean, dry cloth.
- **Periodically check to see that the seat belt and the metal components,** such as buckles, tongues, retractors, flexible wires and anchors, work properly. If loose parts, deterioration, cuts or other damage on the webbing is found, the entire seat belt assembly should be replaced.

⚠WARNING

Do not allow children to play with the seat belts. Most seating positions are equipped with Automatic Locking Retractor (ALR) mode seat belts. If the seat belt becomes wrapped around a child's neck with the ALR mode activated, the child can be seriously injured or killed if the seat belt retracts and becomes tight. This can occur even if the vehicle is parked. Unbuckle the seat belt to release the child. If the seat belt cannot be unbuckled or is already unbuckled, release the child by cutting the seat belt with a suitable tool (such as a knife or scissors) to release the seat belt.

Children need adults to help protect them. They need to be properly restrained.

In addition to the general information in this manual, child safety information is available from many other sources, including doctors, teachers, government traffic safety offices, and community organizations. Every child is different, so be sure to learn the best way to transport your child.

There are three basic types of child restraint systems:

- Rear-facing child restraints
- Forward-facing child restraints
- Booster seats

The proper restraint depends on the child's size. Generally, infants up to about 1 year and less than 9 kg (20 lbs.) should be placed in rear-facing child restraints. Forward-facing child restraints are available for children who outgrow rear-facing child restraints and are at least 1 year old. Booster seats are used to help position a vehicle lap/shoulder belt on a child who can no longer use a forward-facing child restraint.

⚠ WARNING

Infants and children need special protection. The vehicle's seat belts may not fit them properly. The shoulder belt may come too close to the face or neck. The lap belt may not fit over their small hip bones. In an accident, an improperly fitting seat belt could cause serious or fatal injury. Always use appropriate child restraints.

Some states, provinces or territories require the use of approved child restraints for infants and small children. For additional information, see "Child restraints (Type A)" (P. 1-31).

A child restraint may be secured in the vehicle by using either the LATCH (Lower Anchors and Tethers for CHildren) system or with the vehicle seat belt. For additional information, see "Child restraints (Type A)" (P. 1-31).

NISSAN recommends that all pre-teens and children be restrained in the rear seat. Studies show that children are safer when properly restrained in the rear seat than in the front seat.

This is especially important because your vehicle has a supplemental restraint system (air bag system) for the front passenger. For additional information, see "Supplemental Restraint System (SRS)" (P. 1-80).

INFANTS

Infants up to at least 1 year old should be placed in a rear-facing child restraint. NISSAN recommends that infants and small children be placed in child restraints. You should choose a child restraint that fits your vehicle and always follow the manufacturer's instructions for installation and use.

SMALL CHILDREN

Children that are over 1 year old and weigh at least 9 kg (20 lbs.) should remain in a rear-facing child restraint as long as possible up to the height or weight limit of the child restraint. Children who outgrow the height or weight limit of the rear-facing child restraint and are at least 1 year old should be secured in a forward-facing child restraint with a harness. Refer to the manufacturer's instructions for minimum and maximum weight and height recommendations. You should choose a child restraint that fits your vehicle and always follow the manufacturer's instructions for installation and use.

LARGER CHILDREN

Children should remain in a forward-facing child restraint with a harness until they reach the maximum height or weight limit allowed by the child restraint manufacturer.

Once a child outgrows the height or weight limit of the harness-equipped forward-facing child restraint, NISSAN recommends that the child be placed in a commercially available booster seat to obtain proper seat belt fit. For a seat belt to fit properly, the booster seat should raise the child so that the shoulder belt is properly positioned across the chest and the top, middle portion of the shoulder. The shoulder belt should not cross the neck or face and should not fall off the shoulder. The lap belt should lie snugly across the lower hips or upper thighs, not the abdomen. Once the child has grown so the shoulder belt is no longer on or near the face and neck and the lap belt can be positioned properly across the lower hips or upper thighs, use the seat belt without the booster seat.

⚠WARNING

Never let a child stand or kneel on any seat and do not allow a child in the cargo area. The child could be seriously injured or killed in a sudden stop or collision.

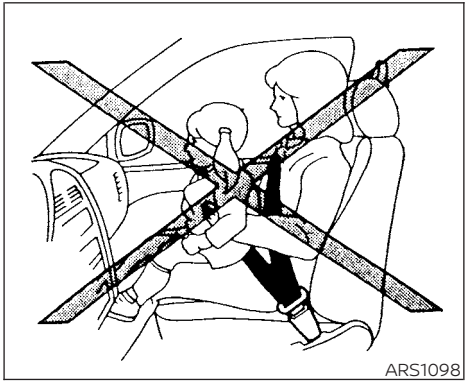
ARS1098

PRECAUTIONS ON CHILD RESTRAINTS

⚠WARNING

- **Failure to follow the warnings and instructions for proper use and installation of child restraints could result in serious injury or death of a child or other passengers in a sudden stop or collision:**

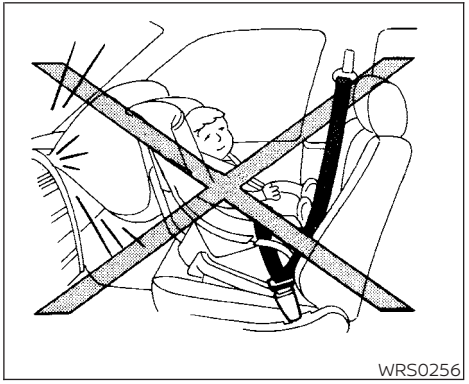
WRS0256

- **The child restraint must be used and installed properly. Always follow all of the child restraint manufacturer's instructions for installation and use.**
- **Infants and children should never be held on anyone's lap. Even the strongest adult cannot resist the forces of a collision.**

- Do not put a seat belt around both a child and another passenger.
- NISSAN recommends that all child restraints be installed in the rear seat. Studies show that children are safer when properly restrained in the rear seat than in the front seat. If you must install a forward-facing child restraint in the front seat, see "Forward-facing child restraint installation using the seat belts" (P. 1-47).
- Never install a rear-facing child restraint in the front seat. An inflating air bag could seriously injure or kill a child. A rear-facing child restraint must only be used in the rear seat.
- Be sure to purchase a child restraint that will fit the child and vehicle. Some child restraints may not fit properly in your vehicle.

- Child restraint anchorages are designed to withstand only those loads imposed by correctly fitted child restraints. Under no circumstances are they to be used to attach adult seat belts, or other items or equipment to the vehicle. Doing so could damage the child restraint anchorages. The child restraint will not be properly installed using the damaged anchorage, and a child could be seriously injured or killed in a collision.
- Never use the anchor points for adult seat belts, or other items.
- A child restraint with a top tether strap should not be used in the front passenger seat.
- Keep seatbacks as upright as possible after fitting the child restraint.
- Infants and children should always be placed in an appropriate child restraint while in the vehicle.

- When the child restraint is not in use, keep it secured with the LATCH system or a seat belt. In a sudden stop or collision, loose objects can injure occupants or damage the vehicle.
- A child restraint in a closed vehicle can become very hot. Check the seating surface and buckles before placing a child in the child restraint.
- 2nd row one touch function should not be used when a child restraint is occupied.
- The 2nd row one touch buttons are enabled during vehicles speeds less than 2 km/h (1.2 mph). If either button is pressed, the seat may unlatch even if the seat is occupied, and may move or pitch. If the seat is unlatched, occupant can be seriously injured during driving.
- To help avoid the risk of personal injury, supervise children, people who require the assistance of others, or pets occupying the 2nd and 3rd rows to prevent pressing the one touch buttons that operate the walk-in function.

This vehicle is equipped with a universal child restraint anchor system, referred to as the LATCH (Lower Anchors and Tethers for CHildren) system. Some child restraints include rigid or webbing-mounted attachments that can be connected to these anchors. For additional information, see "LATCH (Lower Anchors and Tethers for CHildren) system" (P. 1-33).

If you do not have a LATCH compatible child restraint, the vehicle seat belts can be used.

Several manufacturers offer child restraints for infants and children of various sizes. When selecting any child restraint, keep the following points in mind:

- Check the child restraint in your vehicle to be sure it is compatible with the vehicle's seat and seat belt system.
- If the child restraint is compatible with your vehicle, place your child in the child restraint and check the various adjustments to be sure the child restraint is compatible with your child. Choose a child restraint that is designed for your child's height and weight. Always follow all recommended procedures.
- If the combined weight of the child and child restraint is less than 29.5 kg (65 lbs.), you may use either the LATCH anchors or the seat belt to install the child restraint (not both at the same time).
- If the combined weight of the child and child restraint is greater than 29.5 kg (65 lbs.), use the vehicle's seat belt (not the lower anchors) to install the child restraint.
- Be sure to follow the child restraint manufacturer's instructions for installation.

Some states, provinces or territories require that infants and small children be restrained in an approved child restraint at all time while the vehicle is being operated.

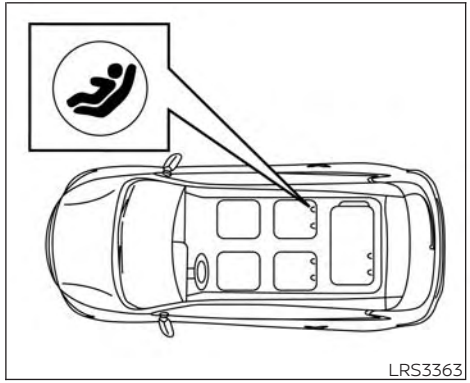

LATCH system lower anchor locations - captain's seats (if so equipped) (Left Hand Drive (LHD) shown, Right Hand Drive (RHD) similar)

LATCH (Lower Anchors and Tethers for CHildren) SYSTEM

Your vehicle is equipped with special anchor points that are used with LATCH system compatible child restraints. This system may also be referred to as the ISOFIX or ISOFIX compatible system. With this system, you do not have to use a vehicle seat belt to secure the child restraint unless the

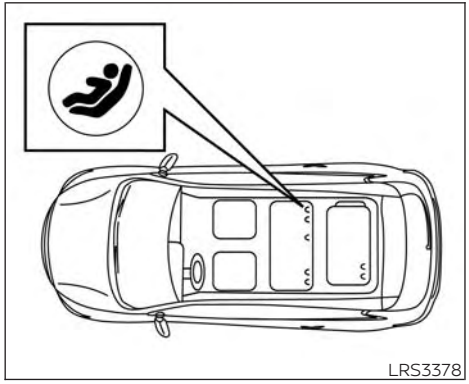

LATCH system lower anchor locations - bench seat (if so equipped) (Left Hand Drive (LHD) shown, Right Hand Drive (RHD) similar)

combined weight of the child and child restraint exceeds 29.5 kg (65 lbs.). If the combined weight of the child and child restraint is greater than 29.5 kg (65 lbs.), use the vehicle's seat belt (not the lower anchors) to install the child restraint. Be sure to follow the child restraint manufacturer's instructions for installation.

The LATCH lower anchor points are provided to install child restraints in the following positions only:

- 2nd row bench seats (if so equipped)
- 2nd row captain's seats (if so equipped)
- 3rd row left outboard seating position

LATCH lower anchor

⚠ WARNING

Failure to follow the warnings and instructions for proper use and installation of child restraints could result in serious injury or death of a child or other passengers in a sudden stop or collision:

- **Attach LATCH system compatible child restraints only at the locations shown in the illustration.**
- **Do not secure a child restraint in the 2nd row center position and outboard position at the same time.**
- **Inspect the lower anchors by inserting your fingers into the lower anchor area. Feel to make sure there are no obstructions over the anchors such as seat belt webbing or seat cushion material. The child restraint will not be secured properly if the lower anchors are obstructed.**
- **Child restraint anchorages are designed to withstand only those loads imposed by correctly fitted child restraints. Under no circumstances are they to be used to attach adult seat belts, or other items or equipment to the vehicle. Doing so could damage the child restraint anchorages. The child restraint will not be properly installed using the damaged anchorages, and a child could be seriously injured or killed in a collision.**

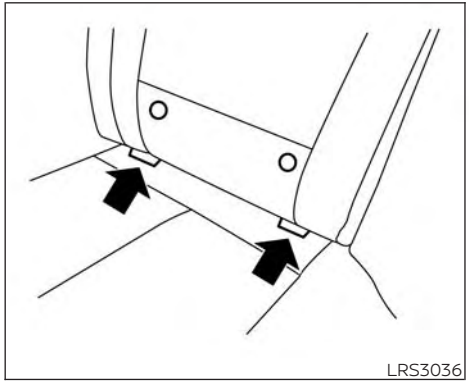

LATCH lower anchor location

LATCH lower anchor location

The LATCH lower anchors are located as shown. A label is attached to the seatback to help you locate the LATCH lower anchors.



LATCH label locations 2nd row captain's seats (if so equipped)

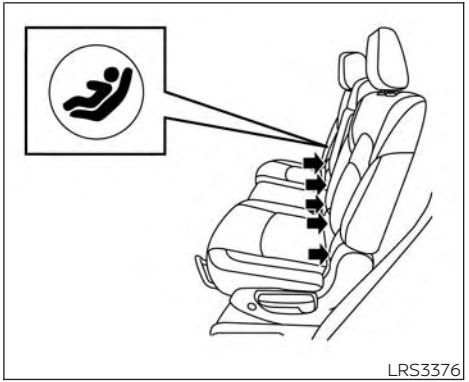

LATCH label locations 2nd row bench seat (if so equipped)



LATCH label location 3rd row seat

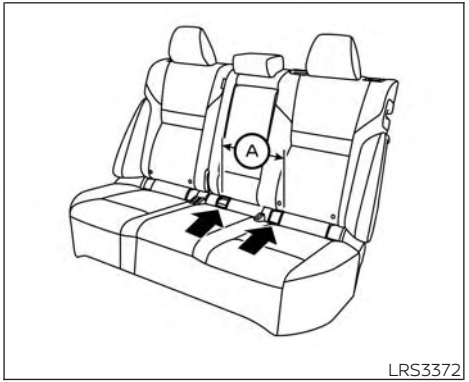

LATCH in the center 2nd row seating position (if so equipped)

A 5th LATCH anchor can be found between the outboard LATCH anchor pairs. It is specifically designed to be used together with the inboard LATCH anchor on the driver's side, in order to install a Child Restraint System (CRS) in the 2nd row center seating position.

These anchors utilize standard LATCH anchor spacing, Ⓐ of 11.02 in (280 mm).

⚠WARNING

- **Never attach two CRS attachments to the same LATCH anchor. This may overload the anchor in a collision, which could increase the risk of the occupant's serious injury or death.**
- **When installing the CRS in the center 2nd row seating position with the inboard LATCH anchors, be careful to ensure any occupant or CRS in the outboard seating positions is properly restrained using the vehicle seat belt and there is no interference with the center CRS installation. If the outboard occupants cannot be properly restrained, consider using the vehicle seat belt to restrain the CRS in the center seating position, or moving the CRS to another position instead.**

- **When installing the CRS in the center seating position, use the seat back recline feature to align the left and right sides of the seat back, creating one evenly reclined surface. Never install a CRS in the center seating position when one part of the seat back is further reclined than the other. This may create an unstable surface on which to install the CRS. Failure to evenly recline the seat backs before CRS installation could increase the risk of the occupant's serious injury or death. Remember to re-check that the CRS is properly installed any time the seats are reclined or adjusted.**

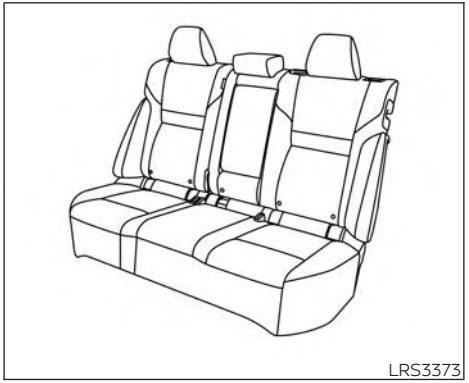

OK

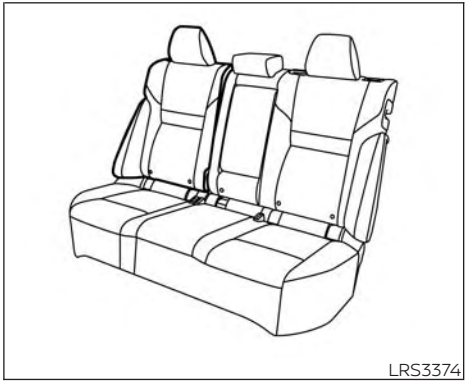

NG (the seat back recline is not aligned)

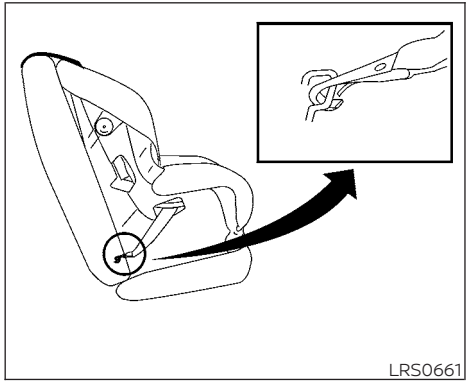

LATCH webbing-mounted attachment

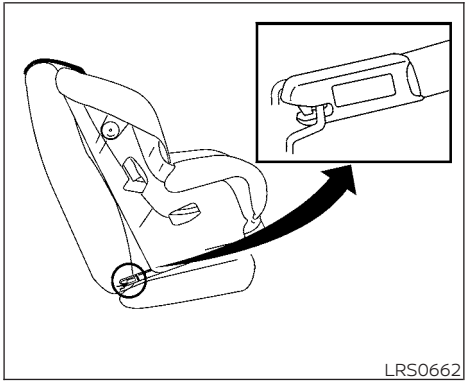

LATCH rigid-mounted attachment

Installing child restraint LATCH lower anchor attachments

LATCH compatible child restraints include two rigid or webbing-mounted attachments that can be connected to two anchors located at certain seating positions in your vehicle. With this system, you do not have to use a vehicle seat belt to secure the child restraint. Check your child restraint for a label stating that it is compatible with LATCH. This information may also be in the instructions provided by the child restraint manufacturer.

When installing a child restraint, carefully read and follow the instructions in this manual and those supplied with the child restraint.

Top tether anchor

⚠WARNING

- **Do not allow cargo to contact the top tether strap when it is attached to the top tether anchor. Properly secure the cargo so it does not contact the top tether strap. Cargo that is not properly secured or cargo that contacts the top tether strap may damage it during a collision. A child could be seriously injured or killed in a collision if the top tether strap is damaged.**
- **Child restraint anchorages are designed to withstand only those loads imposed by correctly fitted child restraints. Under no circumstances are they to be used to attach adult seat belts, or other items or equipment to the vehicle. Doing so could damage the child restraint anchorages. The child restraint will not be properly installed using the damaged anchorages, and a child could be seriously injured or killed in a collision.**

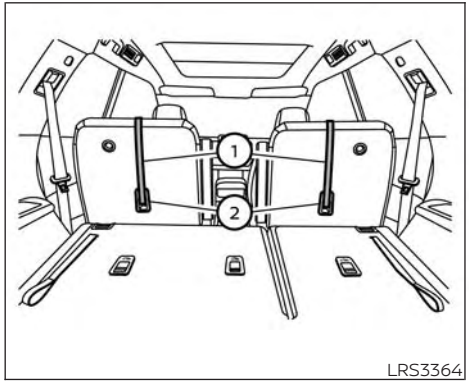

2nd row captain's seats (if so equipped)

Top tether anchor point locations

① Top tether strap

② Anchor point

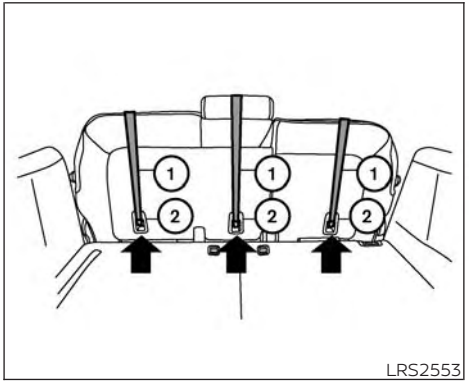

2nd row bench seat (if so equipped)

Anchor points are located in the following locations:

- 2nd row bench seat (if so equipped) on the seatback in the seating positions shown.
- 2nd row captain's seat (if so equipped) on the seatback in the seating positions shown.

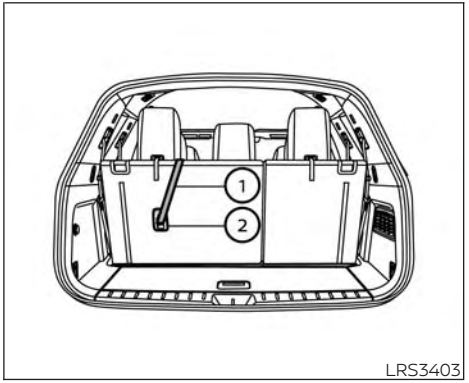

3rd row bench seat (Type A) (if so equipped) (Left Hand Drive (LHD) shown, Right Hand Drive (RHD) similar)

- 3rd row bench on the seatback of the driver's seat (Type A) (Left Hand Drive (LHD) shown, Right Hand Drive (RHD) similar) or in the seating positions shown (Type B).

If you have any questions when installing a top tether strap, it is recommended that you visit a NISSAN dealer for this service.

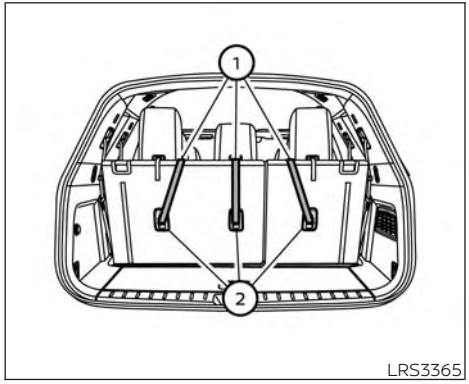

3rd row bench seat (Type B) (if so equipped)

REAR-FACING CHILD RESTRAINT INSTALLATION USING LATCH

For additional information, see "Child safety (Type A)" (P. 1-29) and "Child restraints (Type A)" (P. 1-31) for all Warnings and Cautions before installing a child restraint.

Do not use the lower anchors if the combined weight of the child and the child restraint exceeds 29.5 kg (65 lbs.). If the combined weight of the child and the child restraint is greater than 29.5 kg (65 lbs.), use the vehicle's seat belt (not the lower anchors) to install the child restraint. Be sure to follow the child restraint manufacturer's instructions for installation.

Follow these steps to install a rear-facing child restraint in the 2nd row seats using the LATCH system:

⚠WARNING

Child restraint anchorages are designed to withstand only those loads imposed by correctly fitted child restraints. Under no circumstances are they designed to be used for adult seat belts, harnesses or for attaching other items or equipment to the vehicle. Doing so could damage the child restraint anchorages. The child restraint will not be properly installed using the damaged anchorage, and a child could be seriously injured or killed in a collision.

1. Position the child restraint on the seat. Always follow the child restraint manufacturer's instructions.

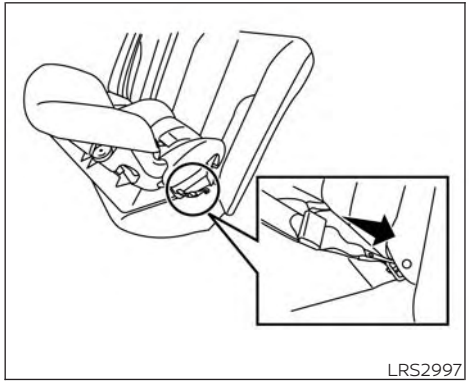

Rear-facing webbing-mounted – step 2

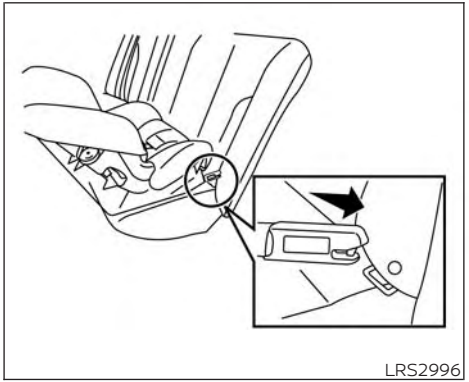

Rear-facing rigid-mounted – step 2

2. Secure the child restraint anchor attachments to the LATCH lower anchors. Check to make sure the LATCH attachment is properly attached to the lower anchors.

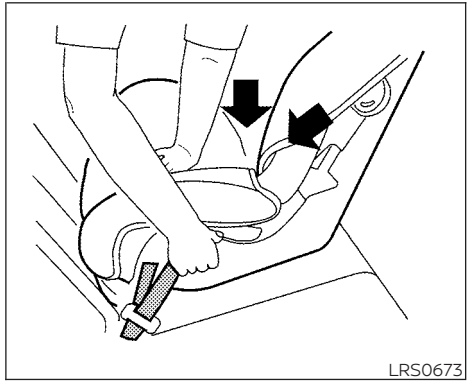

Rear-facing – step 3

3. For child restraints that are equipped with webbing-mounted attachments, remove any additional slack from the anchor attachments. Press downward and rearward firmly in the center of the child restraint with your hand to compress the vehicle seat cushion and seatback while tightening the webbing of the anchor attachments.

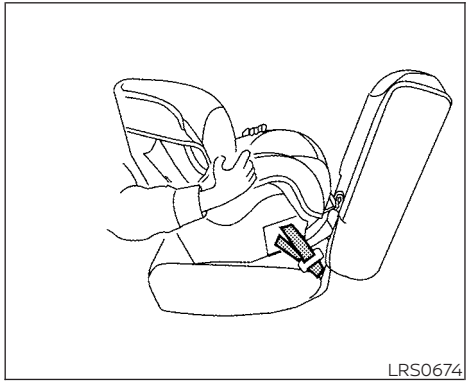

Rear-facing – step 4

4. After attaching the child restraint, test it before you place the child in it. Push it from side to side while holding the child restraint near the LATCH attachment path. The child restraint should not move more than 25 mm (1 inch), from side to side. Try to tug it forward and check to see if the LATCH attachment holds the restraint in place. If the restraint is not secure, tighten the LATCH attachment as necessary, or put the restraint in another seat and test it again. You may need to try a different child restraint or try installing by using the vehicle seat belt (if applicable). Not all child restraints fit in all types of vehicles.
5. Check to make sure the child restraint is properly secured prior to each use. If the child restraint is loose, repeat steps 1 through 4.

REAR-FACING CHILD RESTRAINT INSTALLATION USING THE SEAT BELTS

⚠WARNING

The three-point seat belt with Automatic Locking Retractor (ALR) must be used when installing a child restraint. Failure to use the ALR mode will result in the child restraint not being properly secured. The restraint could tip over or be loose and cause injury to a child in a sudden stop or collision.

For additional information, see "Child safety (Type A)" (P. 1-29) and "Child restraints (Type A)" (P. 1-31) for all Warnings and Cautions before installing a child restraint.

Do not use the lower anchors if the combined weight of the child and the child restraint exceeds 29.5 kg (65 lbs.). If the combined weight of the child and the child restraint is greater than 29.5 kg (65 lbs.), use the vehicle's seat belt (not the lower anchors) to install the child restraint. Be sure to follow the child restraint manufacturer's instructions for installation.

Follow these steps to install a rear-facing child restraint using the vehicle seat belts in the rear seats:

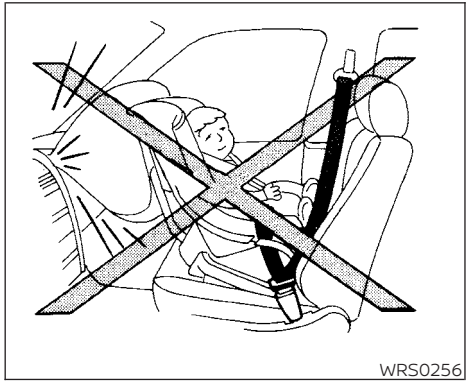

Rear-facing – step 1

1. **Child restraints for infants must be used in the rear-facing direction and therefore must not be used in the front seat.** Position the child restraint on the seat. Always follow the child restraint manufacturer's instructions.

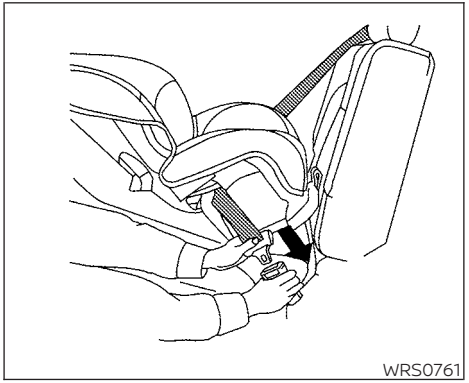

Rear-facing – step 2

2. Route the seat belt tongue through the child restraint and insert it into the buckle until you hear and feel the latch engage. Be sure to follow the child restraint manufacturer's instructions for belt routing.

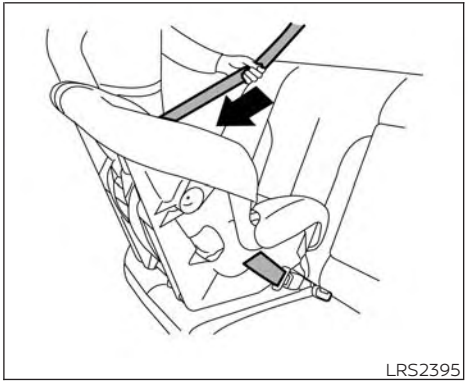

Rear-facing – step 3

3. Pull the shoulder belt until the belt is fully extended. At this time, the seat belt retractor is in the ALR mode (child restraint mode). It reverts to the ELR mode when the seat belt is fully retracted.

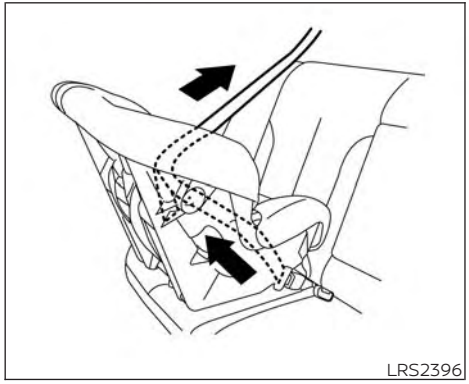

Rear-facing – step 4

4. Allow the seat belt to retract. Pull up on the shoulder belt to remove any slack in the belt.

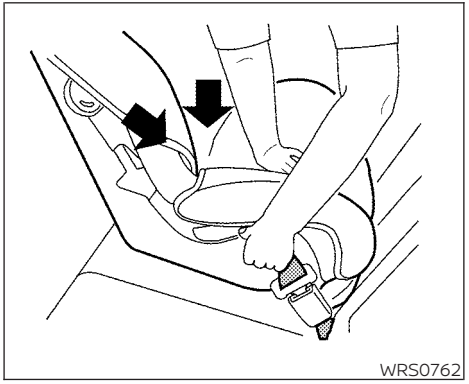

Rear-facing – step 5

5. Remove any additional slack from the seat belt; press downward and rearward firmly in the center of the child restraint to compress the vehicle seat cushion and seatback while pulling up on the seat belt.

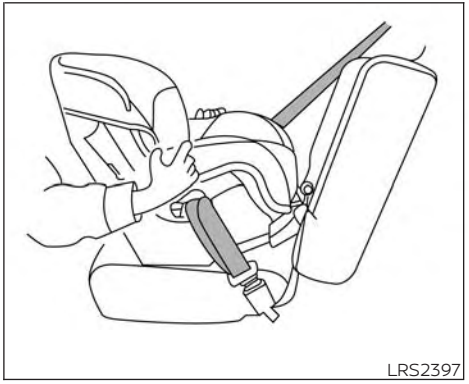

Rear-facing – step 6

6. After attaching the child restraint, test it before you place the child in it. Push it from side to side while holding the child restraint near the seat belt path. The child restraint should not move more than 25 mm (1 inch), from side to side. Try to tug it forward and check to see if the belt holds the restraint in place. If the restraint is not secure, tighten the seat belt as necessary, or put the restraint in another seat and test it again. You may need to try a different child restraint. Not all child restraints fit in all types of vehicles.

7. Check to make sure that the child restraint is properly secured prior to each use. If the seat belt is not locked, repeat steps 3 through 6.

After the child restraint is removed and the seat belt fully retracted, the ALR mode (child restraint mode) is canceled.

FORWARD-FACING CHILD RESTRAINT INSTALLATION USING LATCH

For additional information, see "Child safety (Type A)" (P. 1-29) and "Child restraints (Type A)" (P. 1-31) for all Warnings and Cautions before installing a child restraint.

Follow these steps to install a forward-facing child restraint in the 2nd row seats using the LATCH system:

1. Position the child restraint on the seat. Always follow the child restraint manufacturer's instructions.

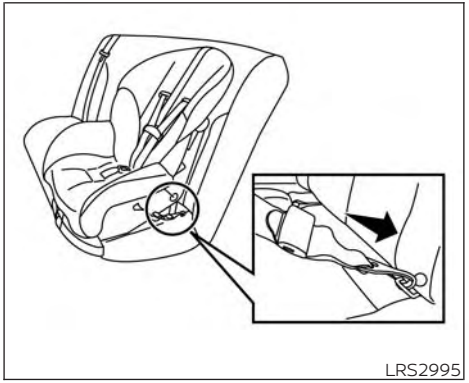

Forward-facing webbing-mounted – step 2

2. Secure the child restraint anchor attachments to the LATCH lower anchors. Check to make sure the LATCH attachment is properly attached to the lower anchors.

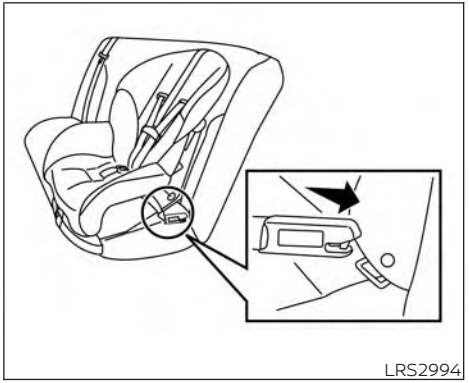

Forward-facing rigid-mounted – step 2

If the child restraint is equipped with a top tether strap, route the top tether strap and secure the tether strap to the tether anchor point. For additional information, see "Installing top tether strap (2nd row captain's seat or bench seat)" (P. 1-51) or "Installing top tether strap (3rd row bench seat) (P. 1-52).

Do not install child restraints that require the use of a top tether strap in seating positions that do not have a top tether anchor.

3. The back of the child restraint should be secured against the vehicle seatback.

   If necessary, adjust or remove the head restraint to obtain the correct child restraint fit. If the head restraint is removed, store it in a secure place. **Be sure to reinstall the head restraint when the child restraint is removed.** For additional information, see "Head restraints" (P. 1-12).

   If the seating position does not have an adjustable head restraint and it is interfering with the proper child restraint fit, try another seating position or a different child restraint.

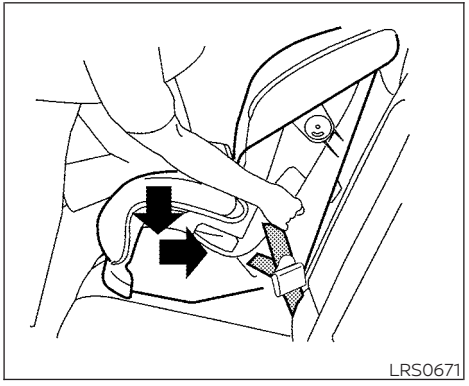

Forward-facing – step 4

4. For child restraints that are equipped with webbing-mounted attachments, remove any additional slack from the anchor attachments. Press downward and rearward firmly in the center of the child restraint with your knee to compress the vehicle seat cushion and seatback while tightening the webbing of the anchor attachments.
5. Tighten the tether strap according to the manufacturer's instructions to remove any slack.

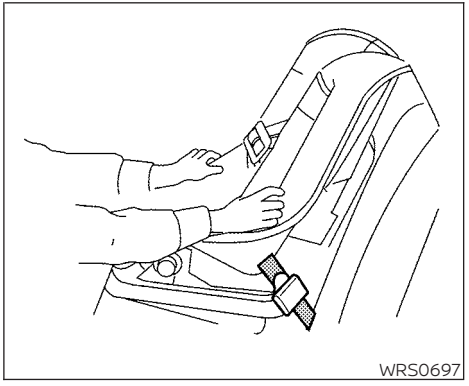

Forward-facing – step 6

6. After attaching the child restraint, test it before you place the child in it. Push it from side to side while holding the child restraint near the LATCH attachment path. The child restraint should not move more than 25 mm (1 inch (25 mm), from side to side. Try to tug it forward and check to see if the LATCH attachment holds the restraint in place. If the restraint is not secure, tighten the LATCH attachment as necessary, or put the restraint in another seat and test it again.

You may need to try a different child restraint. Not all child restraints fit in all types of vehicles.

7. Check to make sure the child restraint is properly secured prior to each use. If the child restraint is loose, repeat steps 1 through 6.

FORWARD-FACING CHILD RESTRAINT INSTALLATION USING THE SEAT BELTS

⚠ WARNING

The three-point seat belt with Automatic Locking Retractor (ALR) must be used when installing a child restraint. Failure to use the ALR mode will result in the child restraint not being properly secured. The restraint could tip over or be loose and cause injury to a child in a sudden stop or collision.

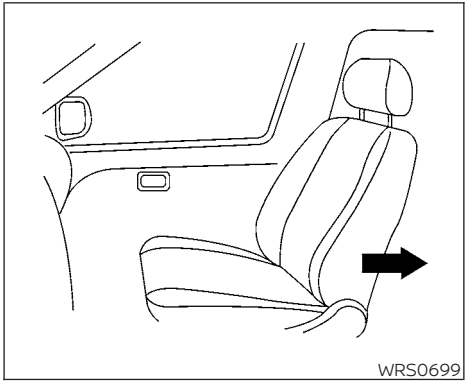

Forward-facing (front passenger seat) – step 1

For additional information, see "Child safety (Type A)" (P. 1-29) and "Child restraints (Type A)" (P. 1-31) for all Warnings and Cautions before installing a child restraint.

Do not use the lower anchors if the combined weight of the child and the child restraint exceeds 29.5 kg (65 lbs.). If the combined weight of the child and the child restraint is greater than 29.5 kg (65 lbs.), use the vehicle's seat belt (not the lower anchors) to install the child restraint. Be sure to follow the child restraint manufacturer's instructions for installation.

Follow these steps to install a forward-facing child restraint using the vehicle seat belt in the rear seats or in the front passenger seat:

1. **If you must install a child restraint in the front seat, it should be placed in a forward-facing direction only. Move the seat to the rearmost position. Child restraints for infants must be used in the rear-facing direction and, therefore, must not be used in the front seat.**
2. Position the child restraint on the seat. Always follow the child restraint manufacturer's instructions.

   The back of the child restraint should be secured against the vehicle seatback.

   If necessary, adjust or remove the head restraint to obtain the correct child restraint fit. If the head restraint is removed, store it in a secure place. **Be sure to reinstall the head restraint when the child restraint is removed.** For additional information about head restraint adjustment, removal and installation, see "Head restraints" (P. 1-12).

If the seating position does not have an adjustable head restraint and it is interfering with the proper child restraint fit, try another seating position or a different child restraint.

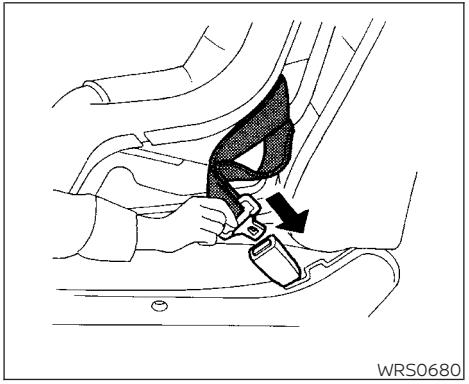

Forward-facing – step 3

3. Route the seat belt tongue through the child restraint and insert it into the buckle until you hear and feel the latch engage. Be sure to follow the child restraint manufacturer's instructions for belt routing.

If the child restraint is equipped with a top tether strap, route the top tether strap and secure the tether strap to the tether anchor point (2nd row installation only). For additional information, see "Installing top tether strap" (P. 1-51).

Do not install child restraints that require the use of a top tether strap in seating positions that do not have a top tether anchor.

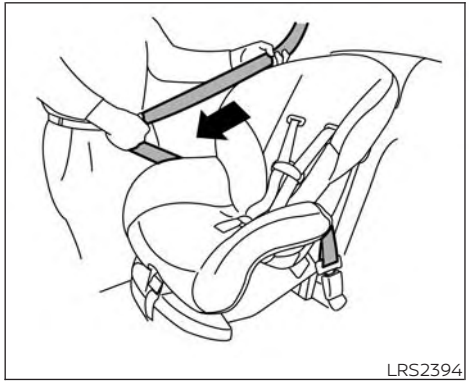

Forward-facing – step 4

4. Pull the shoulder belt until the belt is fully extended. At this time, the seat belt retractor is in the ALR mode (child restraint mode). It reverts to ELR mode when the seat belt is fully retracted.

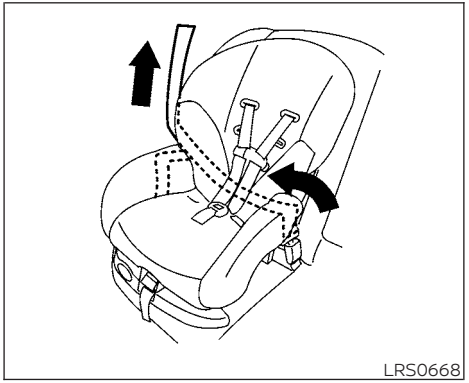

Forward-facing – step 5

5. Allow the seat belt to retract. Pull up on the shoulder belt to remove any slack in the belt.

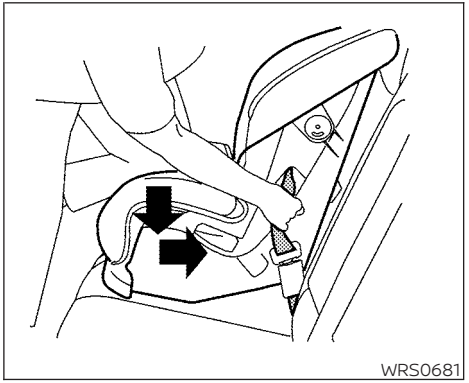

Forward-facing – step 6

6. Remove any additional slack from the seat belt; press downward and rearward firmly in the center of the child restraint with your knee to compress the vehicle seat cushion and seatback while pulling up on the seat belt.
7. Tighten the tether strap according to the manufacturer's instructions to remove any slack.

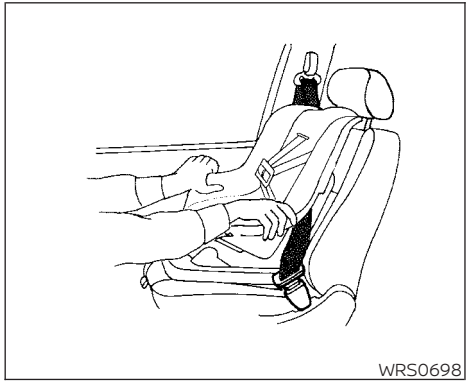
WRS0698

Forward-facing – step 8

8. After attaching the child restraint, test it before you place the child in it. Push it from side to side while holding the child restraint near the seat belt path. The child restraint should not move more than 25 mm (1 inch), from side to side. Try to tug it forward and check to see if the belt holds the restraint in place. If the restraint is not secure, tighten the seat belt as necessary, or put the restraint in another seat and test it again. You may need to try a different child restraint. Not all child restraints fit in all types of vehicles.
9. Check to make sure the child restraint is properly secured prior to each use. If the seat belt is not locked, repeat steps 4 through 8.



LRS3258

Forward-facing – step 10

10. If the child restraint is installed in the front passenger seat, place the ignition switch in the ON position. The front passenger air bag status light (OFF) should illuminate. If this light is not illuminated, see "Front passenger air bag and status light" (P. 1-91). **Move the child restraint to another seating position.** Have the system checked. It is recommended that you visit a NISSAN dealer for this service.

After the child restraint is removed and the seat belt is fully retracted, the ALR mode (child restraint mode) is canceled.

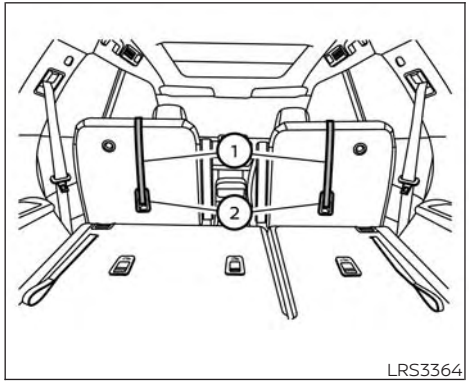

2nd row captain's seats (if so equipped)

INSTALLING TOP TETHER STRAP (2nd row captain's seat or bench seat)

① Top tether strap

② Anchor point

The child restraint top tether strap must be used when installing the child restraint with seat belts.

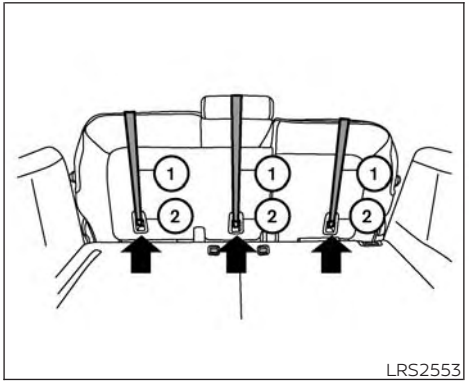

2nd row bench seat (if so equipped)

First, secure the child restraint with the seat belt.

OUTBOARD SEATING POSITIONS

1. Remove the head restraint and store it in a secure place. Be sure to reinstall the head restraint when the child restraint is removed. For additional information about head restraint adjustment, removal and installation, see "Head restraints" (P. 1-12).
2. Position the top tether strap ① as shown.
3. Secure the tether strap to the tether anchor point ② as shown.
4. Tighten the tether strap according to the manufacturer's instructions to remove any slack.

CENTER SEATING POSITION (if so equipped)

1. Position the top tether strap ① as shown.
2. Secure the tether strap to the tether anchor point ② as shown.
3. Tighten the tether strap according to the manufacturer's instructions to remove any slack. Make sure the head restraint does not contact the top tether strap.

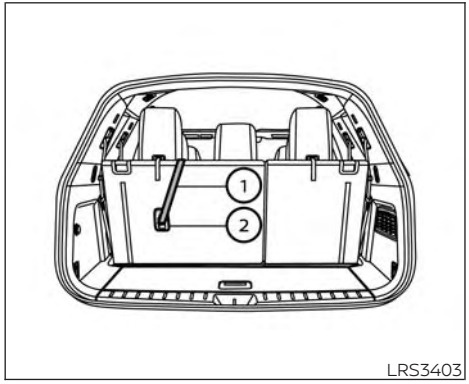

3rd row bench seat (Type A) (if so equipped) (Left Hand Drive (LHD) shown, Right Hand Drive (RHD) similar)

INSTALLING TOP TETHER STRAP (3rd row bench seat)

① Top tether strap

② Anchor point

First, secure the child restraint with the seat belt, as applicable.

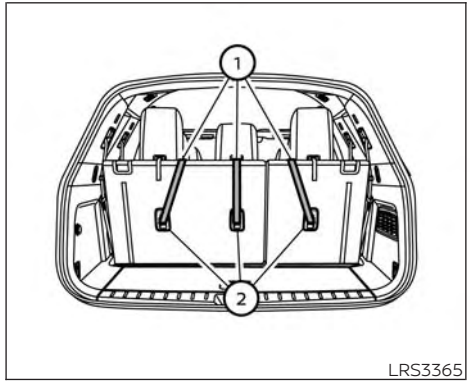

3rd row bench seat (Type B) (if so equipped)

⚠WARNING

In the 3rd row bench seat, a child restraint with a top tether strap can only be used on the driver's side (Type A) (Left Hand Drive (LHD) shown, Right Hand Drive (RHD) similar). Do not place in the passenger's side seating position (passenger's side for Left Hand Drive (LHD) models) and attempt to angle the tether strap to the driver's side seating position (passenger's side for Right Hand Drive models).

1. Position the top tether strap ① as shown.
2. Secure the tether strap to the tether anchor point ② as shown.
3. Tighten the tether strap according to the manufacturer's instructions to remove any slack. Make sure the head restraint does not contact the top tether strap.

If you have any questions when installing a top tether strap, it is recommended that you visit a NISSAN dealer for this service.

⚠WARNING

Child restraint anchorages are designed to withstand only those loads imposed by correctly fitted child restraints. Under no circumstances are they to be used to attach adult seat belts, or other items or equipment to the vehicle. Doing so could damage the child restraint anchorages. The child restraint will not be properly installed using the damaged anchorage, and a child could be seriously injured or killed in a collision.

⚠WARNING

Do not allow children to play with the seat belts. Most seating positions are equipped with Automatic Locking Retractor (ALR) mode (if so equipped) seat belts. If the seat belt becomes wrapped around a child's neck with the ALR mode (if so equipped) activated, the child can be seriously injured or killed if the seat belt retracts and becomes tight. This can occur even if the vehicle is parked. Unbuckle the seat belt to release the child. If the seat belt cannot be unbuckled or is already unbuckled, release the child by cutting the seat belt with a suitable tool (such as a knife or scissors) to release the seat belt.

Children need adults to help protect them. They need to be properly restrained.

In addition to the general information in this manual, child safety information is available from many other sources, including doctors, teachers, government traffic safety offices, and community organizations. Every child is different, so be sure to learn the best way to transport your child.

There are three basic types of child restraint systems:

- Rear-facing child restraint
- Forward-facing child restraint
- Booster seat

The proper restraint depends on the child's size. Generally, infants up to about 1 year and less than 9 kg (20 lbs.) should be placed in rear-facing child restraints. Forward-facing child restraints are available for children who outgrow rear-facing child restraints and are at least 1 year old. Booster seats are used to help position a vehicle lap/shoulder belt on a child who can no longer use a forward-facing child restraint.

⚠WARNING

Infants and children need special protection. The vehicle's seat belts may not fit them properly. The shoulder belt may come too close to the face or neck. The lap belt may not fit over their small hip bones. In an accident, an improperly fitting seat belt could cause serious or fatal injury. Always use appropriate child restraints.

Some states, provinces or territories require the use of approved child restraints for infants and small children. For additional information, see "Child restraints (Type B)" (P. 1-54).

A child restraint may be secured in the vehicle by using either the ISOFIX system or with the vehicle seat belt. For additional information, see "Child restraints (Type B)" (P. 1-54).

NISSAN recommends that all child restraints be installed in the rear seat. According to collision statistics, children are safer when properly restrained in the rear seat than in the front seat. This is especially important because your vehicle has a supplemental restraint system (air bag system) for the front passenger. For additional information, see "Supplemental Restraint System (SRS)" (P. 1-80).

INFANTS

Infants up to at least 1 year old should be placed in a rear-facing child restraint. NISSAN recommends that infants and small children be placed in child restraints.

You should choose a child restraint that fits your vehicle and always follow the manufacturer's instructions for installation and use.

SMALL CHILDREN

Children that are over 1 year old and weigh at least 9 kg (20 lbs.) should remain in a rear-facing child restraint as long as possible up to the height or weight limit of the child restraint. Children who outgrow the height or weight limit of the rear-facing child restraint and are at least 1 year old should be secured in a forward-facing child restraint with a harness. Refer to the manufacturer's instructions for minimum and maximum weight and height recommendations. You should choose a child restraint that fits your vehicle and always follow the manufacturer's instructions for installation and use.

LARGER CHILDREN

Children should remain in a forward-facing child restraint with a harness until they reach the maximum height or weight limit allowed by the child restraint manufacturer.

Once a child outgrows the height or weight limit of the harness-equipped forward-facing child restraint, NISSAN recommends that the child be placed in a commercially available booster seat to obtain proper seat belt fit. For a seat belt to fit properly, the booster seat should raise the child so that the shoulder belt is properly positioned across the chest and the top, middle portion of the shoulder. The shoulder belt should not cross the neck or face and should not fall off the shoulder. The lap belt should lie snugly across the lower hips or upper thighs, not the abdomen. Once the child has grown so the shoulder belt is no longer on or near the face and neck and the lap belt can be positioned properly across the lower hips or upper thighs, use the seat belt without the booster seat.

⚠WARNING

Never let a child stand or kneel on any seat and do not allow a child in the cargo area. The child could be seriously injured or killed in a sudden stop or collision.

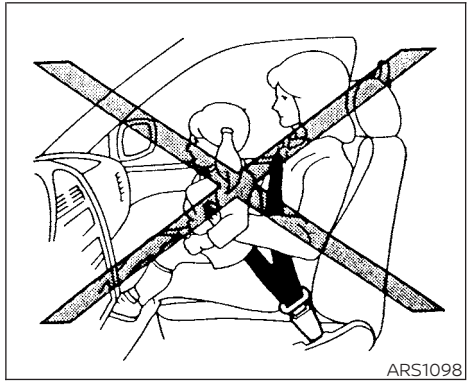
ARS1098

PRECAUTIONS ON CHILD RESTRAINTS

⚠WARNING

- **Infants and small children should always be placed in an appropriate child restraint while riding in the vehicle. Failure to use a child restraint can result in serious injury or death.**

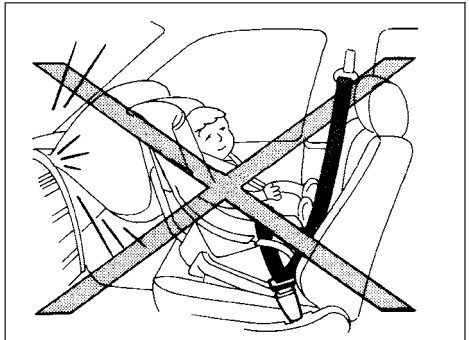

WRS0256

- Infants and small children should never be carried on your lap. It is not possible for even the strongest adult to resist the forces of a severe accident. Also, do not put the same seat belt around both your child and yourself.
- Even with the NISSAN Advanced Air Bag System, never install a rear-facing child restraint in the front seat. An inflating front air bag could seriously injure or kill your child. A rear-facing child restraint must only be used in the rear seat.
- All child restraints should be installed in the rear seat. According to accident statistics, children are safer when properly restrained in the rear seat than in the front seat. If you must install a front facing child restraint in the front seat, see "Booster seat installation" (P. 1-78).
- Improper use or improper installation of a child restraint can increase the risk or severity of injury for both the child and other occupants of the vehicle and can lead to serious injury or death in an accident.
- Follow all of the child restraint manufacturer's instructions for installation and use. When purchasing a child restraint, be sure to select one which will fit your child and vehicle. It may not be possible to properly install some types of child restraints in your vehicle.
- If the child restraint is not anchored properly, the risk of a child being injured in a collision or a sudden stop greatly increases.
- Child restraint anchorages are designed to withstand only those loads imposed by correctly fitted child restraints. Under no circumstances are they to be used to attach adult seat belts, harnesses or other items or equipment to the vehicle. Doing so could damage the child restraint anchorages. The child restraint will not be properly installed using the damaged anchorage, and a child could be seriously injured or killed in a collision.
- Adjustable seatbacks should be positioned to fit the child restraint, but as upright as possible.
- After attaching the child restraint, test it before you place the child in it. Push it from side to side while holding the seat near the ISOFIX attachment or by the seat belt path. The child restraint should not move more than 25 mm (1 inch), from side to side. Try to tug it forward and check to see if the belt holds the restraint in place. If the restraint is not secure, tighten the belt as necessary, or put the restraint in another seat and test it again. You may need to try a different child restraint. Not all child restraints fit in all types of vehicles.

- **When your child restraint is not in use, keep it secured with the ISOFIX system or a seat belt to prevent it from being thrown around in case of a sudden stop or accident.**
- **In vehicles equipped with a side air bag system, do not let any infants or small children sit in the front passenger's seat as the air bag may cause serious injury in case of deployment during a collision.**
- **Remember that a child restraint left in a closed vehicle can become very hot. Check the seating surface and buckles before placing your child in the child restraint.**
- **2nd row one touch function should not be used when a child restraint is occupied.**
- **The 2nd row one touch buttons are enabled during vehicles speeds less than 2 km/h (1.2 mph). If either button is pressed, the seat may unlatch even if the seat is occupied, and may move or pitch. If the seat is unlatched, occupant can be seriously injured during driving.**
- **To help avoid the risk of personal injury, supervise children, people who require the assistance of others, or pets occupying the 2nd and 3rd rows to prevent pressing the one touch buttons that operate the walk-in function.**

This vehicle is equipped with a universal child restraint lower anchor system, referred to as the ISOFIX system. Some child restraints include two rigid or webbing-mounted attachments that can be connected to these lower anchors. For additional information, see "ISOFIX child restraint system" (P. 1-62).

If you do not have an ISOFIX compatible child restraint, the vehicle seat belts can be used. For additional information, see "Child restraint installation using the seat belts" (P. 1-68). In general, child restraints are also designed to be installed with a lap/shoulder seat belt.

Several manufacturers offer child restraints for infants and small children of various sizes. When selecting any child restraint, keep the following points in mind:

- Check the child restraint in your vehicle to be sure it is compatible with the vehicle's seat and seat belt system.
- If the child restraint is compatible with your vehicle, place your child in the child restraint and check the various adjustments to be sure the child restraint is compatible with your child. Choose a child restraint that is designed for your child's height and weight. Always follow all recommended procedures.

Some states, provinces or territories require that infants and small children be restrained in an approved child restraint at all times while the vehicle is being operated.

UNIVERSAL CHILD RESTRAINTS FOR FRONT SEATS AND REAR SEATS

NOTE:

Universal child restraints approved to UN Regulation No. 44 (UN R44) or UN Regulation No. 129 (UN R129) are clearly marked "Universal"

When selecting any child restraint, keep the following points in mind:

- Choose a child restraint that complies with UN R44 or UN R129.
- Place your child in the child restraint and check the various adjustments to be sure the child restraint is compatible with your child. Always follow all of the recommended procedures.
- Check the child restraint in your vehicle to be sure it is compatible with the vehicle's seat belt system.
- Refer to the tables in this section for a list of the recommended fitment positions and the approved child restraints for your vehicle.

Mass group of child restraint

Mass group	Child's weight
Group 0	up to 10 kg
Group 0+	up to 13 kg
Group I	9 to 18 kg
Group II	15 to 25 kg
Group III	22 to 36 kg

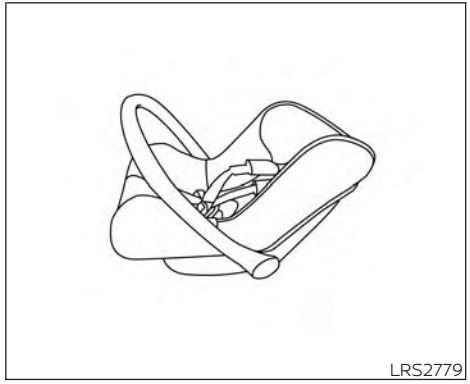

Child safety seat categories 0 and 0+

Examples of child restraint types:



Child safety seat categories 0+ and I



Child safety seat categories II and III

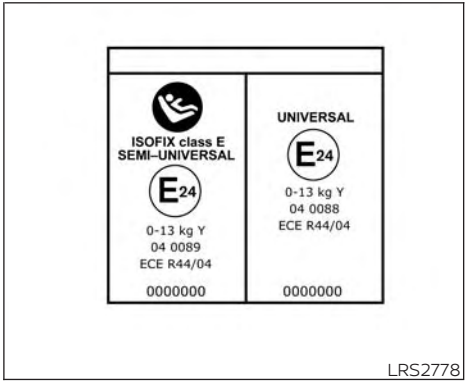

Example of ECE Regulation No. 44 Child Restraint label

⚠WARNING

In vehicles equipped with a side air bag system, do not let any infants or small children sit in the front passenger's seat as the air bag may cause serious injury in case of deployment during a collision.

NOTE:

Universal child restraints approved to UN Regulation No. 44 (UN R44) or UN Regulation No. 129 (UN R129) are clearly marked "Universal".

Approved child restraint positions

Mass Group		Seating Position						
		Front Passenger	2nd Row Out-board (LH) *1*2	2nd Row Out-board (RH) *1*2	2nd Row Center (if so equipped)	3rd row Out-board (LH) *2*3	3rd Row Out-board (RH) *2*3	3rd Row Center *2*3
Group 0	up to 10 kg	X	U	U	U	U	U	U
Group 0+	up to 13 kg	X	U	U	U	U	U	U
Group I	9 to 18 kg	X	U	U	U	U	U	U
Group II	15 to 25 kg	X	U	U	U	U	U	U
Group III	22 to 36 kg	X	U	U	U	U	U	U

U: Suitable for "universal" category restraints, forward and rearward facing, approved for use in this mass group.
UF: Suitable for forward facing "universal" category restraints approved for use in this mass group.
L: Suitable for particular child restraints given on the attached child restraint manufacturer's website, or "semi-universal" categories.
X: Seat position not suitable for children in this mass group.
*1: Adjust front seat (slider, lifter, seatback) to accommodate the child's legs and the child restraint.
*2: Adjust head restraint to upper most position or, if necessary, remove it in case of any interference with the child restraint system.
*3: Adjust second row seat (slider, lifter, seatback) to accommodate the child's legs and the child restraint.

⚠WARNING

In vehicles equipped with a side air bag system, do not let any infants or small children sit in the front passenger's seat as the air bag may cause serious injury in case of deployment during a collision.

NOTE:

Universal child restraints approved to UN Regulation No. 44 (UN R44) or UN Regulation No. 129 (UN R129) are clearly marked "Universal".

List of approved ISOFIX and specific universal child restraints

Weight Group				Seating Position					
				2nd Row Outboard (LH) *1*2	2nd Row Outboard (RH) *1*2	2nd Row Center (Bench Seat) (if so equipped)	3rd Row Outboard (LH) *2*3	3rd Row Outboard (RH)	3rd Row Center
Carry-cot		F	ISO/L1	X	X	X	X	X	X
		G	ISO/L2	X	X	X	X	X	X
Group 0		E	ISO/R1	IL	IL	IL	IL	X	X
Group 0+		E	ISO/R1	IL	IL	IL	IL	X	X
		D	ISO/R2	IL	IL	IL	X	X	X
		C	ISO/R3	IL	IL	IL	X	X	X
Group I	9 to 18 kg	D	ISO/R2	IL	IL	IL	X	X	X
		C	ISO/R3	IL	IL	IL	X	X	X
		B	ISO/F2	IL/IUF	IL/IUF	IL/IUF	IL/IUF	X	X
		B1	ISO/F2X	IL/IUF	IL/IUF	IL/IUF	IL/IUF	X	X
		A	ISO/F3	IL/IUF	IL/IUF	IL/IUF	IL/IUF	X	X
Group II	15 to 25 kg	- -	- -	IL	IL	IL	IL	X	X
Group III	22 to 36 kg	- -	- -	IL	IL	IL	IL	X	X

IUF: Suitable for ISOFIX forward facing child restraint systems of the "universal" category approved for use in this mass group.
IL: Suitable for ISOFIX child restraint system in the "semi-universal" category.
X: Seat position not suitable for children in this mass group.
*1: Adjust front seat (slider, lifter, seatback) to accommodate the child's legs and the child restraint.
*2: Adjust head restraint to upper most position or, if necessary, remove it in case of any interference with the child restraint system.
*3: Adjust second row seat (slider, lifter, seatback) to accommodate the child's legs and the child restraint.

⚠WARNING

In vehicles equipped with a side air bag system, do not let any infants or small children sit in the front passenger's seat as the air bag may cause serious injury in case of deployment during a collision.

NOTE:

Universal child restraints approved to UN Regulation No. 44 (UN R44) or UN Regulation No. 129 (UN R129) are clearly marked "Universal".

Permissible options for fitting an i-Size child restraint (if so equipped)

	Seating Position				
	Front Passenger	2nd Row Outboard Seats *1	2nd Row Center Seats *1	3rd Row Outboard Seats	3rd Row Center Seats
i-Size Child Restraints	X	i-U	i-U	X	X

i-U: Suitable for i-Size "universal" Child Restraint Systems forward and rearward facing.
i-UF: Suitable for forward-facing i-Size "universal" Child Restraint Systems only.
X: Seating position not suitable for i-Size "universal" Child Restraint Systems.
*1: Adjust head restraint to upper most position or, if necessary, remove it in case of any interference with the child restraint system.

⚠ WARNING

In vehicles equipped with a side air bag system, do not let any infants or small children sit in the front passenger's seat as the air bag may cause serious injury in case of deployment during a collision.

NOTE:

Universal child restraints approved to UN Regulation No. 44 (UN R44) or UN Regulation No. 129 (UN R129) are clearly marked "Universal".

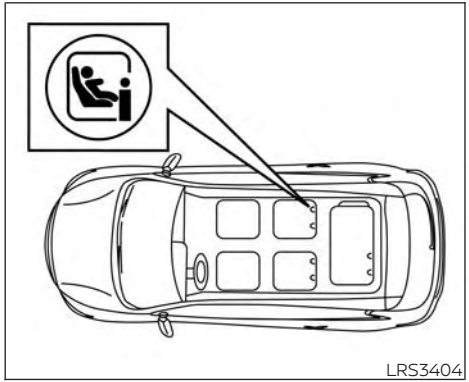

ISOFIX system lower anchor locations - captain's seats

ISOFIX CHILD RESTRAINT SYSTEM

The ISOFIX anchor points are located as follows:

- 2nd row bench seats (if so equipped)
- 2nd row captain's seats (if so equipped)
- 3rd row driver's side seating position

The ISOFIX system anchors are located at the rear of the seat cushion near the seatback. A label is attached to the seatback to help you locate the ISOFIX system anchors.

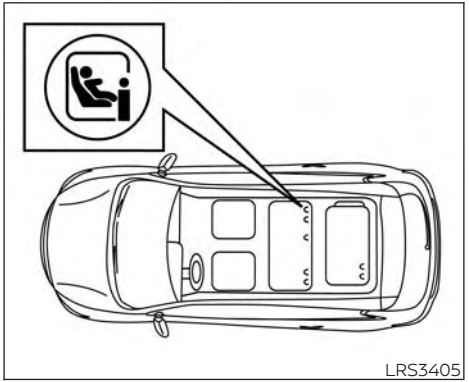

ISOFIX system lower anchor locations - 2nd row bench seat

⚠WARNING

- **Attach ISOFIX system compatible child restraints only at the locations shown. If a child restraint is not secured properly, your child could be seriously injured or killed in an accident.**

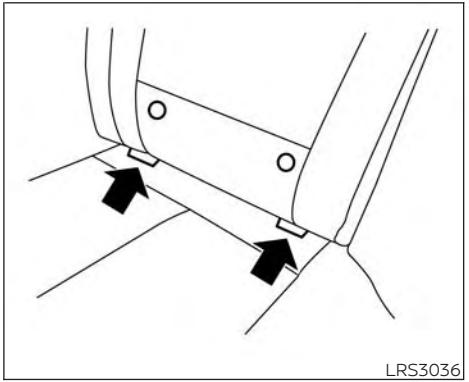

- **Child restraint anchorages are designed to withstand only those loads imposed by correctly fitted child restraints. Under no circumstances are they to be used for adult seat belts, harnesses or for attaching other items or equipment to the vehicle. Doing so could damage the child restraint anchorages. The child restraint will not be properly installed using the damaged anchorage, and a child could be seriously injured or killed in a collision.**

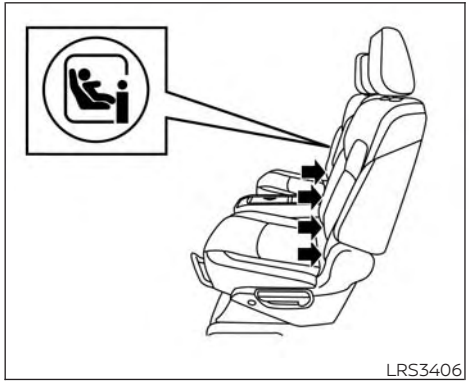

ISOFIX anchor point labels — 2nd row captain's seats (if so equipped)

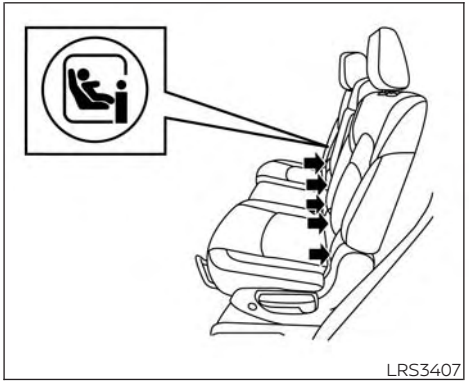

ISOFIX anchor point labels — 2nd row bench seat (if so equipped)

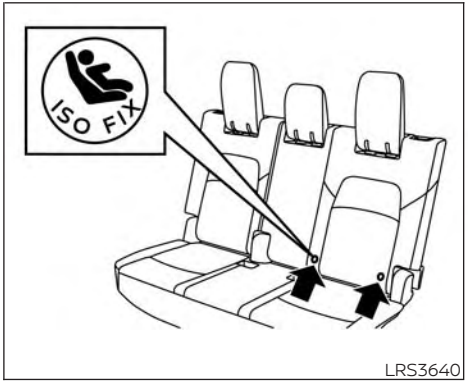

ISOFIX anchor point labels — 3rd row bench seat (Left Hand Drive (LHD) shown, Right Hand Drive (RHD) similar)

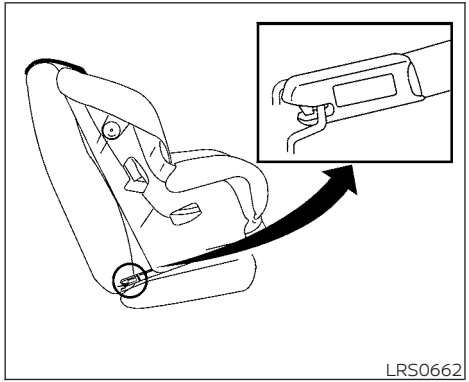
LRS0662

ISOFIX child restraints include two rigid attachments that can be connected to two anchors located in the seat. With this system, you do not have to use a vehicle seat belt to secure the child restraint. Check your child restraint for a label stating that it is compatible with the ISOFIX child restraints. This information may also be in the instructions provided by the child restraint manufacturer.

ISOFIX child restraints generally require the use of a top tether strap or other anti-rotation devices such as support legs. When installing ISOFIX child restraints, carefully read and follow the instructions in this manual and those supplied with the child restraints.

FORWARD-FACING CHILD RESTRAINT INSTALLATION USING ISOFIX

Be sure to follow the manufacturer's instructions for the proper use of your child restraint. Follow these steps to install a forward-facing child restraint on the rear outboard seats using ISOFIX:

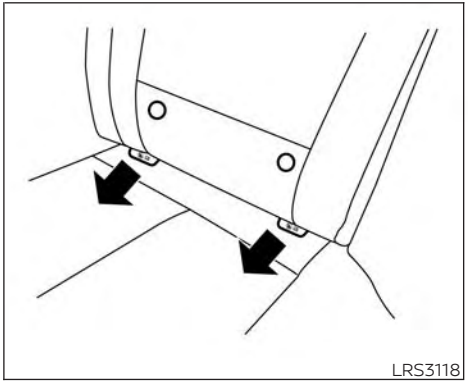
LRS3118

Forward-facing – step 1

1. Remove the plastic covers from the ISOFIX anchors by pulling the covers straight back. Store the covers in a secure area.
2. Position the child restraint on the seat. Always follow the child restraint manufacturer's instructions.

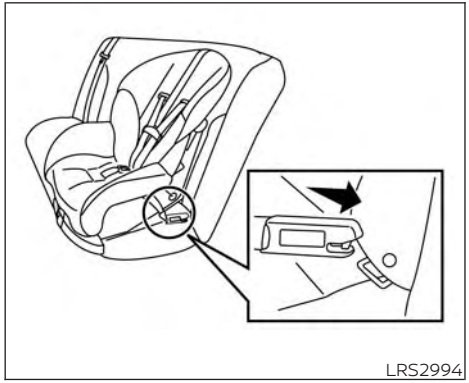

Forward-facing – step 3

3. Secure the child restraint anchor attachments to the ISOFIX lower anchors. Check to make sure the ISOFIX attachment is properly attached to the lower anchors.

   If the child restraint is equipped with a top tether strap, route the top tether strap and secure the tether strap to the tether anchor point. For additional information, see "Top tether strap child restraint" (P. 1-73).

   Do not install child restraints that require the use of a top tether strap in seating positions that do not have a top tether anchor.

4. The back of the child restraint should be secured against the vehicle seatback.

   If necessary, adjust or remove the head restraint to obtain the correct child restraint fit. If the head restraint is removed, store it in a secure place. **Be sure to reinstall the head restraint when the child restraint is removed.** For additional information, see "Head restraints" (P. 1-12).

   If the seating position does not have an adjustable head restraint and it is interfering with the proper child restraint fit, try another seating position or a different child restraint.

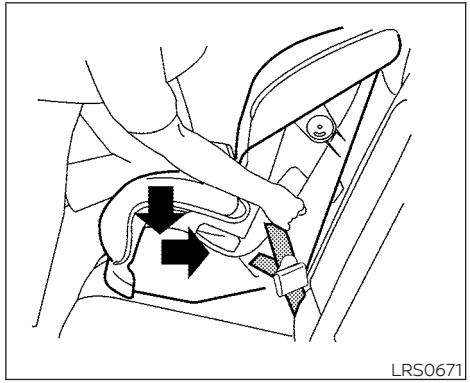

Forward-facing – step 5

5. For child restraints that are equipped with webbing-mounted attachments, remove any additional slack from the anchor attachments. Press downward and rearward firmly in the center of the child restraint with your knee to compress the vehicle seat cushion and seatback while tightening the webbing of the anchor attachments.

6. Tighten the tether strap according to the manufacturer's instructions to remove any slack.
7. If the child restraint is equipped with other anti-rotation devices such as support legs, use them instead of the top tether strap following the child restraint manufacturer's instructions.

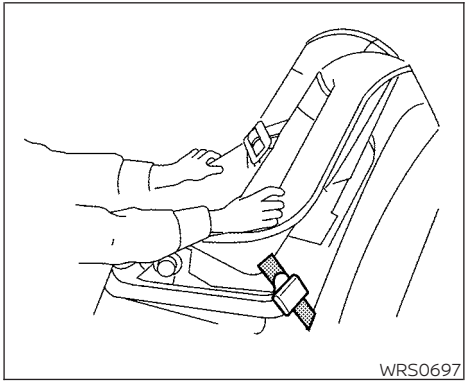

Forward-facing – step 8

8. After attaching the child restraint, test it before you place the child in it. Push it from side to side while holding the child restraint near the ISOFIX attachment path. The child restraint should not move more than 25 mm (1 inch) from side to side. Try to tug it forward and check to see if the ISOFIX attachment holds the restraint in place. If the restraint is not secure, tighten the ISOFIX attachment as necessary or put the restraint in another seat and test it again. You may need to try a different child restraint. Not all child restraints fit in all types of vehicles.
9. Check to make sure the child restraint is properly secured prior to each use. If the child restraint is loose, repeat steps 3 through 7.
10. If you remove the child restraint reinstall the plastic ISOFIX anchor covers after use by pushing the covers straight onto the ISOFIX anchors.

REAR-FACING CHILD RESTRAINT INSTALLATION USING ISOFIX

For additional information, see all Warnings and Cautions in "Child safety (Type B)" (P. 1-53) and "Child restraints (Type B)" (P. 1-54) before installing a child restraint.

Do not use the lower anchors if the combined weight of the child and the child restraint exceeds 29.5 kg (65 lbs.). If the combined weight of the child and the child restraint is greater than 29.5 kg (65 lbs.), use the vehicle's seat belt (not the lower anchors) to install the child restraint. Be sure to follow the child restraint manufacturer's instructions for installation.

Follow these steps to install a rear-facing child restraint using the ISOFIX system:

1. Position the child restraint on the seat. Always follow the child restraint manufacturer's instructions.
2. Secure the child restraint anchor attachments to the ISOFIX lower anchors. Check to make sure the ISOFIX attachment is properly attached to the lower anchors.

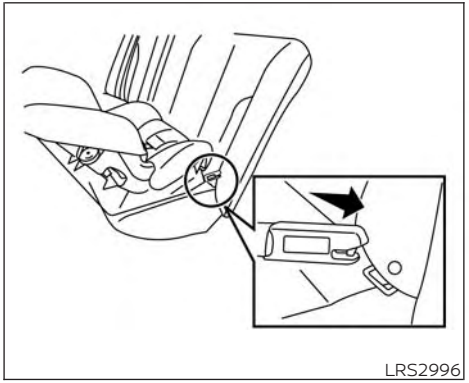

Rear-facing rigid-mounted – step 2

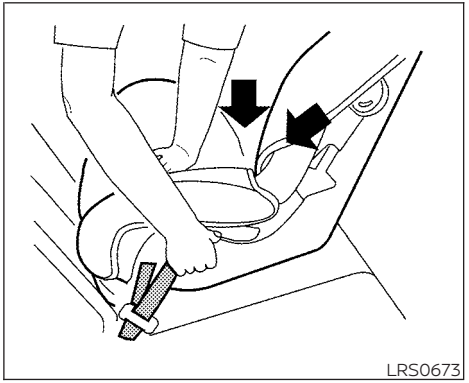

Rear-facing – step 3

3. For child restraints that are equipped with webbing-mounted attachments, remove any additional slack from the anchor attachments. Press downward and rearward firmly in the center of the child restraint with your hand to compress the vehicle seat cushion and seatback while tightening the webbing of the anchor attachments.
4. Tighten the tether strap according to the manufacturer's instructions to remove any slack.

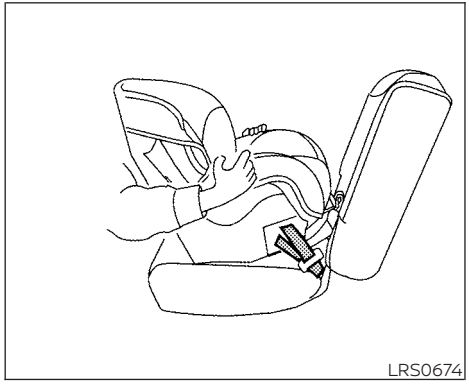

Rear-facing – step 5

5. After attaching the child restraint, test it before you place the child in it. Push it from side to side while holding the child restraint near the ISOFIX attachment path. The child restraint should not move more than 25 mm (1 inch), from side to side. Try to tug it forward and check to see if the ISOFIX attachment holds the restraint in place. If the restraint is not secure, tighten the ISOFIX attachment as necessary, or put the restraint in another seat and test it again. You may need to try a different child restraint or try installing by using the vehicle seat belt (if applicable). Not all child restraints fit in all types of vehicles.
6. Check to make sure the child restraint is properly secured prior to each use. If the child restraint is loose, repeat steps 2 through 5.

CHILD RESTRAINT INSTALLATION USING THE SEAT BELTS

⚠WARNING

- **The three-point seat belt in your vehicle is equipped with an Automatic Locking Retractor (ALR) which must be used when installing a child restraint.**
- **Failure to use the ALR mode will result in the child restraint not being properly secured. The restraint could tip over or otherwise be unsecured and cause injury to the child in a sudden stop or collision.**

Forward-facing

When you install a child restraint in the 2nd row or 3rd row seats, follow these steps:

1. Position the child restraint on the seat. Adjust the head restraint to its highest position. Always follow the child restraint manufacturer's instructions.

   The back of the child restraint should be secured against the vehicle seatback.

   If necessary, adjust or remove the head restraint to obtain the correct child restraint fit. For additional information, see "Head restraints" (P. 1-12).

   If the head restraint is removed, store it in a secure place. Be sure to reinstall the head restraint when the child restraint is removed.

   If the seating position does not have an adjustable head restraint and it is interfering with the proper child restraint fit, try another seating position or a different child restraint.

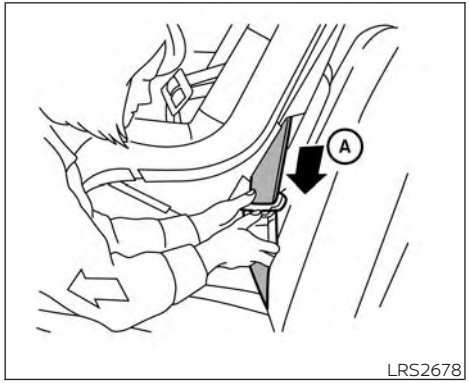

Forward-facing — step 2

2. Route the seat belt tongue through the child restraint and insert it into the buckle until you hear and feel the latch engage Ⓐ. Be sure to follow the child restraint manufacturer's instructions for belt routing.

If the child restraint is equipped with a top tether strap, route the top tether strap and secure the tether strap to the tether anchor point. For additional information, see "Top tether strap child restraint" (P. 1-73).

Do not install child restraints that require the use of a top tether strap in seating positions that do not have a top tether anchor.

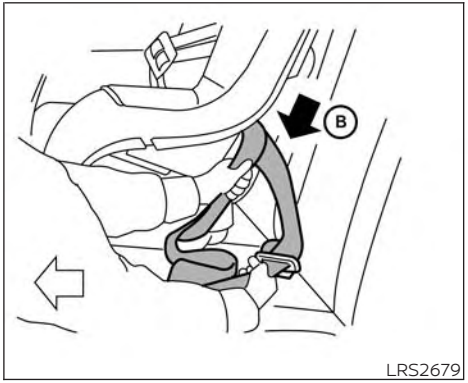

Forward-facing — step 3

3. Pull the shoulder belt until the belt is fully extended Ⓑ. At this time, the seat belt retractor is in the ALR mode (child restraint mode). It reverts back to ELR mode when the seat belt is fully retracted.

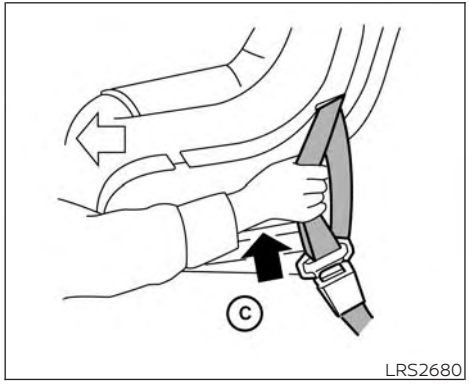

Forward-facing — step 4

4. Allow the seat belt to retract. Pull up on the shoulder belt Ⓒ to remove any slack in the belt.

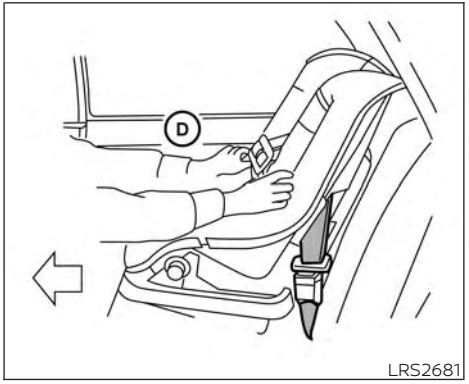

Forward-facing — step 5

5. After attaching the child restraint, test it before you place the child in it. Push it from side to side while holding the seat near the seat belt path. The child restraint should not move more than 25 mm (1 in) from side to side. Try to tug it forward Ⓓ and check to see if the belt holds the restraint in place. If the restraint is not secure, tighten the belt as necessary or put the restraint in another seat and test it again. You may need to try a different child restraint. Not all child restraints fit in all types of vehicles.
6. Check that the retractor is in the ALR mode by trying to pull more seat belt out of the retractor. If you cannot pull any more seat belt webbing out of the retractor, the retractor is in the ALR mode.
7. Check to make sure that the child restraint is properly secured prior to each use. If the seat belt is not locked, repeat steps 3 through 6.

After the child restraint is removed and the seat belt is fully retracted, the ALR mode (child restraint mode) is canceled.

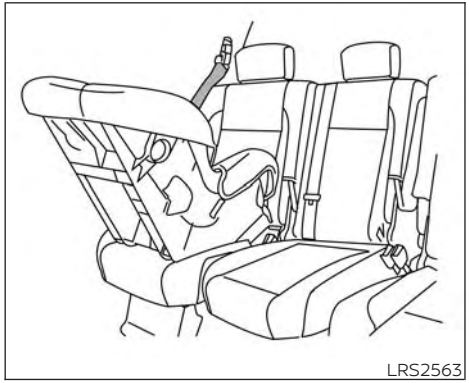

Rear-facing — step 1

Rear-facing

When you install a child restraint on the 2nd row or 3rd row seats, follow these steps:

1. Position the child restraint on the seat. Always follow the child restraint manufacturer's instructions.

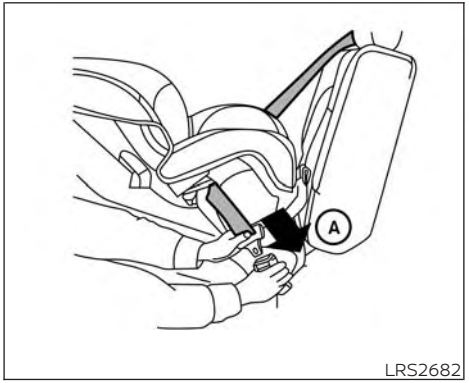

Rear-facing — step 2

2. Route the seat belt tongue through the child restraint and insert it into the buckle until you hear and feel the latch engage Ⓐ.

   Be sure to follow the child restraint manufacturer's instructions for belt routing.

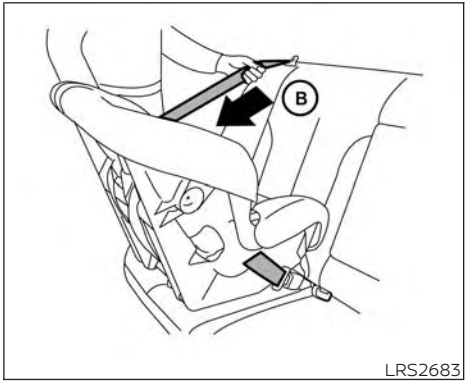

Rear-facing — step 3

3. Pull the shoulder belt until the belt is fully extended Ⓑ. At this time, the seat belt retractor is in the ALR mode (child restraint mode). It reverts to ELR mode when the seat belt is fully retracted.

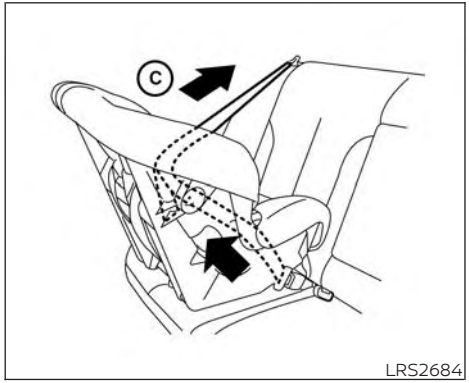

Rear-facing — step 4

4. Allow the seat belt to retract Ⓒ. Pull up on the shoulder belt to remove any slack in the belt.

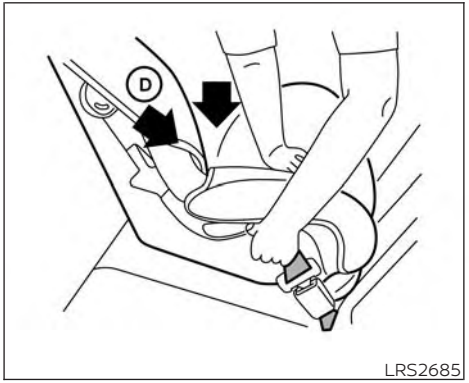

Rear-facing — step 5

5. Remove any additional slack from the seat belt; press downward Ⓓ and rearward firmly in the center of the child restraint to compress the vehicle seat cushion and seatback while pulling up on the seat belt.

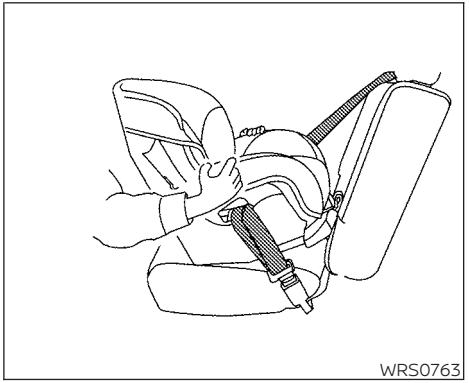

Rear-facing — step 6

6. After attaching the child restraint, test it before you place the child in it. Push it from side to side while holding the seat near the seat belt path. The child restraint should not move more than 25 mm (1 in) from side to side. Try to tug it forward and check to see if the belt holds the restraint in place. If the restraint is not secure, tighten the belt as necessary or put the restraint in another seat and test it again. You may need to try a different child restraint. Not all child restraints fit in all types of vehicles.

7. Check that the retractor is in the ALR mode by trying to pull more seat belt out of the retractor. If you cannot pull any more seat belt webbing out of the retractor, the retractor is in the ALR mode.
8. Check to make sure that the child restraint is properly secured prior to each use. If the seat belt is not locked, repeat steps 3 through 7.

After the child restraint is removed and the seat belt fully retracted, the ALR mode (child restraint mode) is canceled.

TOP TETHER STRAP CHILD RESTRAINT

If your child restraint has a top tether strap, it must be secured to the anchor point provided behind its position.

⚠ WARNING

Child restraint anchorages are designed to withstand only those loads imposed by correctly fitted child restraints. Under no circumstances are they to be used for adult seat belts, harnesses or for attaching other items or equipment to the vehicle. Doing so could damage the child restraint anchorages. The child restraint will not be properly installed using the damaged anchorage, and a child could be seriously injured or killed in a collision.

First, secure the child restraint with the seat belt or the ISOFIX system, as applicable.

For the 2nd row captain's seat and 2nd row bench seat outboard seating positions only, adjust the head restraint to its highest position and route the top tether strap between the head restraint and the top of the seatback. Secure the tether strap to the tether anchor point located on the back of the seatback of the same seat that the child restraint is in.

For best child restraint fit, see the child restraint installation instructions in this section and the child restraint manufacturer's instructions.

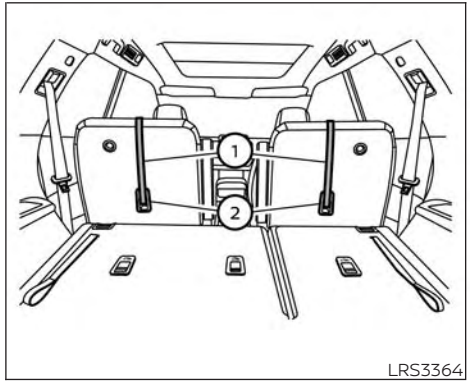

2nd row captain's seats (if so equipped)

Top tether anchor point locations

① Top tether strap

② Anchor point

Anchor points are located in the following locations:

- 2nd row bench seats (if so equipped)
- 2nd row captain's seats (if so equipped)
- 3rd row bench seats 3rd row bench on the seatback of the driver's seat (Type A) (Left Hand Drive (LHD) shown, Right Hand Drive (RHD) similar) or in the seating positions shown (Type B).

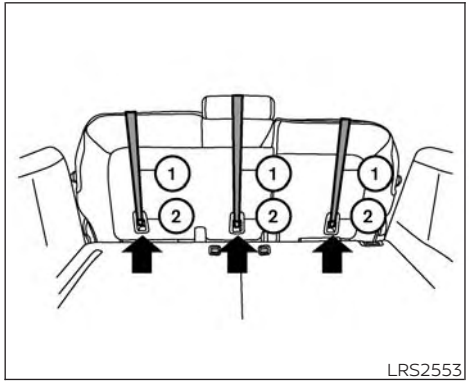

2nd row bench seat (if so equipped)

If you have any questions when installing a top tether strap, it is recommended that you visit an NISSAN dealer for this service.

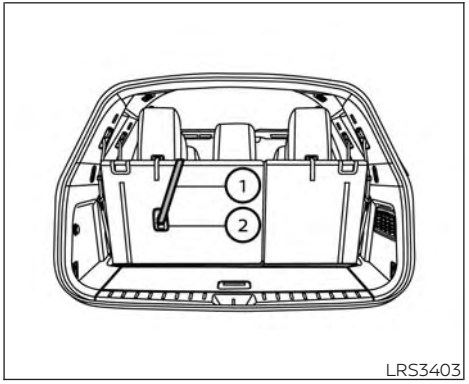

3rd row bench seat (Type A) (if so equipped) (Left Hand Drive (LHD) shown, Right Hand Drive (RHD) similar)

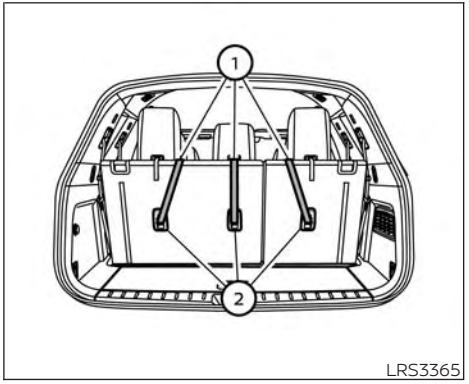

3rd row bench seat (Type B) (if so equipped)

BOOSTER SEATS

For additional information on installing a booster seat in your vehicle, follow the instructions outlined in this section.

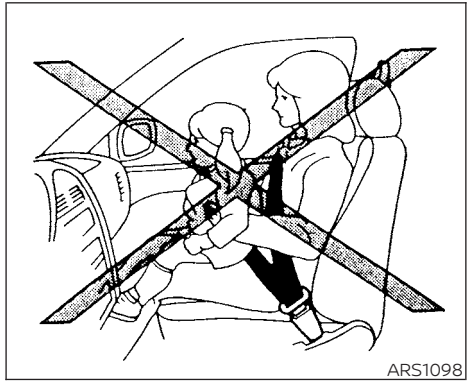
ARS1098

PRECAUTIONS ON BOOSTER SEATS

⚠ WARNING

- **Infants and small children should always be placed in an appropriate child restraint while riding in the vehicle. Failure to use a child restraint or booster seat can result in serious injury or death.**
- **Infants and small children should never be carried on your lap. It is not possible for even the strongest adult to resist the forces of a severe accident. The child could be crushed between the adult and parts of the vehicle. Also, do not put the same seat belt around both your child and yourself.**
- **NISSAN recommends that the booster seat be installed in the rear seat. According to accident statistics, children are safer when properly restrained in the rear seat than in the front seat. If you must install a booster seat in the front seat, see "Booster seat installation" (P. 1-78).**
- **A booster seat must only be installed in a seating position that has a lap/shoulder belt. Failure to use a three-point type seat belt with a booster seat can result in a serious injury in sudden stop or collision.**
- **Improper use or improper installation of a booster seat can increase the risk or severity of injury for both the child and other occupants of the vehicle and can lead to serious injury or death in an accident.**

- **Do not use towels, books, pillows or other items in place of a booster seat. Items such as these may move during normal driving or a collision and result in serious injury or death. Booster seats are designed to be used with a lap/shoulder belt. Booster seats are designed to properly route the lap and shoulder portions of the seat belt over the strongest portions of a child's body to provide the maximum protection during a collision.**
- **Follow all of the booster seat manufacturer's instructions for installation and use. When purchasing a booster seat, be sure to select one which will fit your child and vehicle. It may not be possible to properly install some types of booster seats in your vehicle.**
- **If the booster seat and seat belt is not used properly, the risk of a child being injured or killed in a collision or a sudden stop greatly increases.**
- **Adjustable seatbacks should be positioned to fit the booster seat, but as upright as possible.**
- **After placing the child in the booster seat and fastening the seat belt, make sure the shoulder portion of the belt is away from the child's face and neck and the lap portion of the belt does not cross the abdomen.**
- **Do not put the shoulder belt behind the child or under the child's arm. If you must install a booster seat in the front seat, see "Booster seat installation" (P. 1-78).**
- **When your booster seat is not in use, keep it secured with a seat belt to prevent it from being thrown around in case of a sudden stop or accident.**

⚠ CAUTION

Remember that a booster seat left in a closed vehicle can become very hot. Check the seating surface and buckles before placing your child in the booster seat.

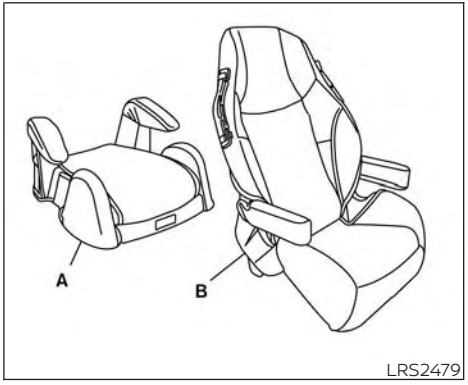

A. Low back booster seat

B. High back booster seat

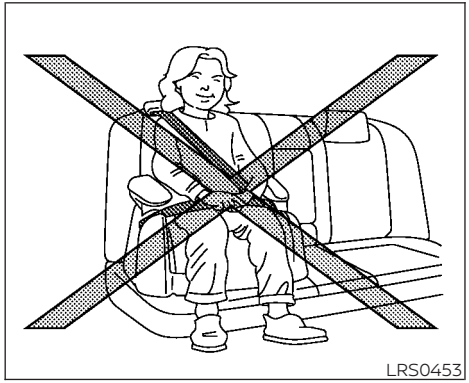
LRS0453

Booster seats of various sizes are offered by several manufacturers. When selecting any booster seat, keep the following points in mind:

- Check the booster seat in your vehicle to be sure it is compatible with the vehicle's seat and seat belt system.


LRS0464

- Make sure the child's head will be properly supported by the booster seat or vehicle seat. The seatback must be at or above the center of the child's ears. For example, if a low back booster seat is chosen, the vehicle seatback must be at or above the center of the child's ears. If the seatback is lower than the center of the child's ears, a high back booster seat should be used.
- If the booster seat is compatible with your vehicle, place your child in the booster seat and check the various adjustments to be sure the booster seat is compatible with your child. Choose a booster seat that is designed for your child's height and weight. Always follow all recommended procedures.

The instructions in this section apply to booster seat installation in the rear seats or the front passenger seat.

Some states, provinces or territories require that infants and small children be restrained in an approved child restraint at all times while the vehicle is being operated.

BOOSTER SEAT INSTALLATION

⚠ WARNING

- **NISSAN recommends that booster seats be installed in the 2nd row and 3rd row seating positions. However, if you must install a booster seat in the front passenger seat, move the passenger's seat to the rearmost position.**
- **To avoid injury to child, do not use the lap/shoulder belt in the Automatic Locking Retractor (ALR) mode when using a booster seat with the seat belts.**

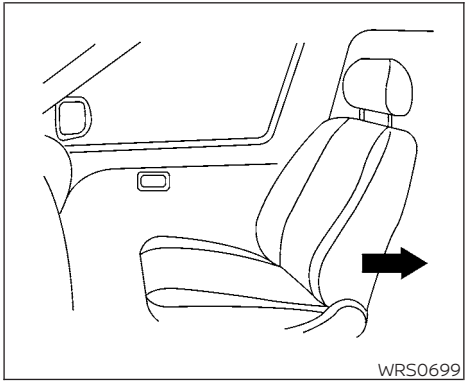
WRS0699

Follow these steps to install a booster seat in the rear seat or in the front passenger seat:

1. **If you must install a booster seat in the front seat, move the seat to the rearmost position.**
2. Position the booster seat on the seat. Only place it in a front facing direction. Always follow the booster seat manufacturer's instructions.


LRS0454

Front passenger position

3. The booster seat should be positioned on the vehicle seat so that it is stable. If necessary, adjust or remove the head restraint to obtain the correct booster seat fit. For additional information, see "Head restraints" (P. 1-12).

   If the head restraint is removed, store it in a secure place. Be sure to reinstall the head restraint when the booster seat is removed.


LRS0451

2nd row center bench seat position (if so equipped)

If the seating position does not have an adjustable head restraint and it is interfering with the proper booster seat fit, try another seating position or a different booster seat.

4. Position the lap portion of the seat belt low and snug on the child's hips. Be sure to follow the booster seat manufacturer's instructions for adjusting the seat belt routing.

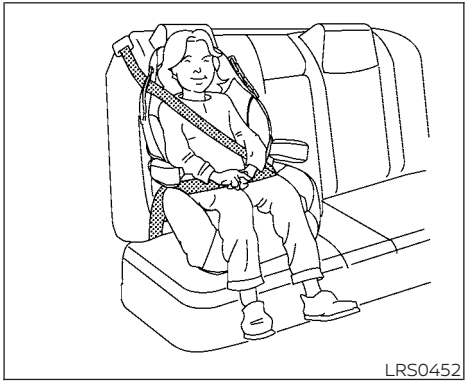
LRS0452

2nd row outboard position

5. Pull the shoulder belt portion of the seat belt toward the retractor to take up extra slack. Be sure the shoulder belt is positioned across the top, middle portion of the child's shoulder. Be sure to follow the booster seat manufacturer's instructions for adjusting the seat belt routing.
6. Follow the warnings, cautions and instructions for properly fastening a seat belt shown in "Three-point type seat belt with retractor" (P. 1-23).



LRS3258

7. If the booster seat is installed in the front passenger seat, place the power switch in the ON position. Either the front passenger ON or OFF air bag status light will illuminate, depending on the size of the child and the type of booster seat being used. For additional information, see "Front passenger air bag and status light" (P. 1-91).

PRECAUTIONS ON SRS

This SRS section contains important information concerning the following systems:

- Driver and front passenger supplemental front-impact air bag (NISSAN Advanced Air Bag System)
- Front seat-mounted side-impact supplemental air bag
- 2nd row outboard seat-mounted side-impact supplemental air bag (if so equipped)
- Front central seat-mounted side-impact supplemental air bag (if so equipped)
- Roof-mounted curtain side-impact and rollover supplemental air bag
- Driver and front passenger supplemental knee air bag (if so equipped)
- Seat belt with pretensioner(s) (front and 2nd row outboard seats (if so equipped))

Supplemental front-impact air bag system

The NISSAN Advanced Air Bag System can help cushion the impact force to the head and chest of the driver and front passenger in certain frontal collisions.

Vehicle damage (or lack of it) is not always an indication of proper side air bag and curtain air bag operation.

Front seat-mounted side-impact supplemental air bag system

This system can help cushion the impact force to the chest area of the driver and front passenger in certain side-impact collisions. The side air bags are designed to inflate on the side where the vehicle is impacted.

2nd row outboard seat-mounted side-impact supplemental air bag system (if so equipped)

This system can help cushion the impact force to the head area of the driver and front passenger in certain side-impact and rollover collisions. In a side impact, this air bag is designed to inflate during a vehicle impact from either side.

Front central seat-mounted side-impact supplemental air bag (if so equipped)

This system can help cushion the impact force to the head area of the driver and front passenger in certain side-impact and rollover collisions. In a side-impact, this air bag is designed to inflate during a vehicle impact from either side.

Roof-mounted curtain side-impact and rollover supplemental air bag system

This system can help cushion the impact force to the head of occupants in front and rear outboard seating positions in certain side-impact collisions. The curtain air bags are designed to inflate on the side where the vehicle is impacted. In a rollover, the curtain air bags are designed to inflate and remain inflated for a short time.

Driver and front passenger supplemental knee air bag (if so equipped)

This system can help cushion the impact force to the driver's and front passenger's knees in certain collisions.

The SRS is designed to **supplement** the crash protection provided by the driver and front passenger and rear outboard seat belts and is **not a substitute** for them. Seat belts should always be correctly worn and the occupant seated a suitable distance away from the steering wheel, instrument panel and door finishers. For additional information, see "Seat belts" (P. 1-19).

The supplemental air bags operate only when the ignition switch is placed in the ON position.

After placing the ignition switch in the ON position, the supplemental air bag warning light illuminates. The supplemental air bag warning light will turn off after about 7 seconds if the system is operational.

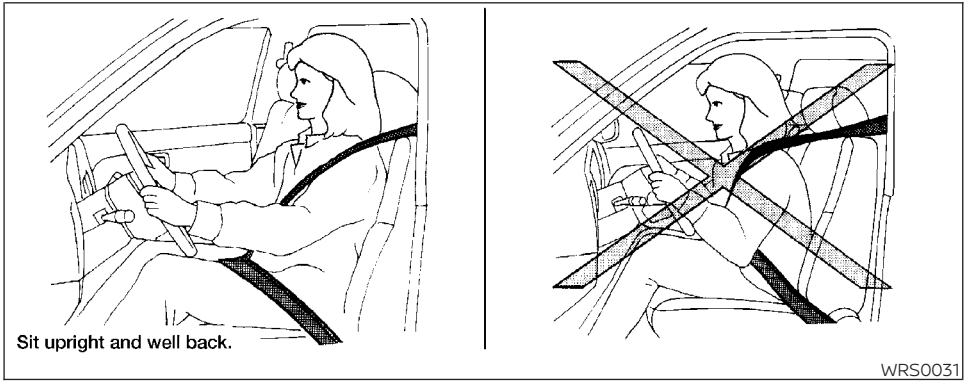

⚠WARNING

- **The front air bags ordinarily will not inflate in the event of a side impact, rear impact, rollover, or lower severity frontal collision. Always wear your seat belts to help reduce the risk or severity of injury in various kinds of accidents**
- **The front passenger air bag and front passenger supplemental knee air bag (if so equipped) will not inflate if the passenger air bag status light is lit. For additional information, see "Front passenger air bag and status light" (P. 1-91).**

- **The seat belts and the front air bags are most effective when you are sitting well back and upright in the seat. The front air bags inflate with great force. Even with the NISSAN Advanced Air Bag System, if you are unrestrained, leaning forward, sitting sideways or out of position in any way, you are at greater risk of injury or death in a crash. You may also receive serious or fatal injuries from the front air bag if you are up against it when it inflates. Always sit back against the seatback and as far away as practical from the steering wheel or instrument panel. Always properly use the seat belts.**
- **The driver and front passenger seat belt buckles are equipped with sensors that detect if the seat belts are fastened. The NISSAN Advanced Air Bag System monitors the severity of a collision and seat belt usage, then inflates the air bags as needed. Failure to properly wear seat belts can increase the risk or severity of injury in an accident.**
- **The front passenger seat is equipped with an occupant classification sensor (weight sensor) that turns the front passenger air bag and front passenger supplemental knee air bag (if so equipped) OFF under some conditions. This sensor is only used in this seat. Failure to be properly seated and wearing the seat belt can increase the risk or severity of injury in an accident. For additional information, see "Front passenger air bag and status light" (P. 1-91).**
- **Keep hands on the outside of the steering wheel. Placing them inside the steering wheel rim could increase the risk that they are injured when the front air bag inflates.**

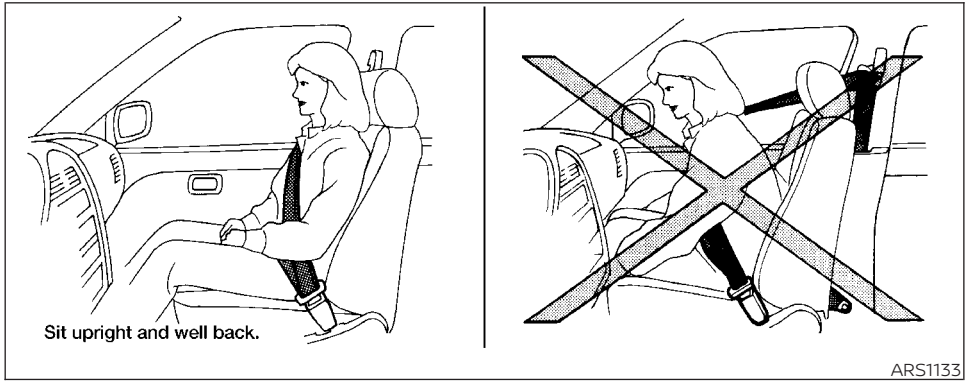

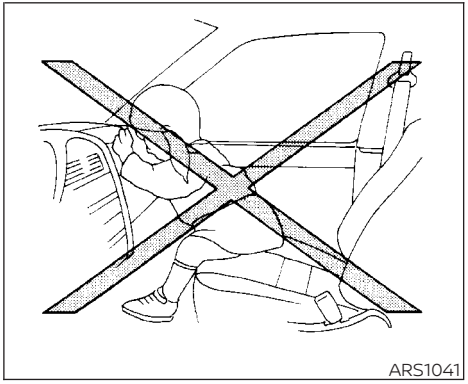

⚠WARNING

- **Never let children ride unrestrained or extend their hands or face out of the window. Do not attempt to hold them in your lap or arms. Some examples of dangerous riding positions are shown in the illustrations.**

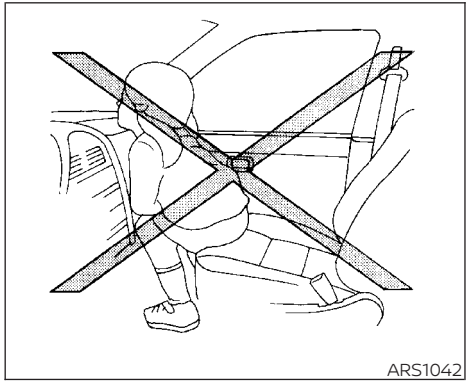
ARS1042

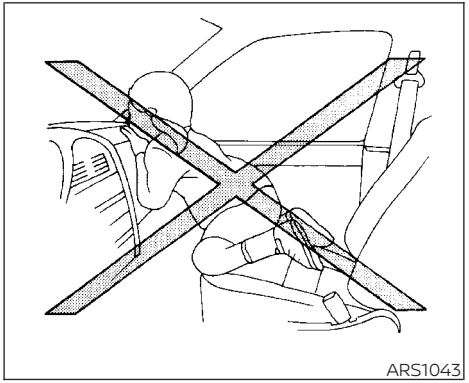
ARS1043

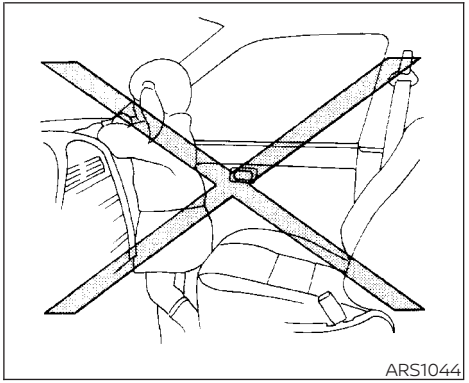
ARS1044

⚠ WARNING

- **Children may be severely injured or killed when the front air bags, side air bags or curtain air bags inflate if they are not properly restrained. Pre-teens and children should be properly restrained in the rear seat, if possible.**

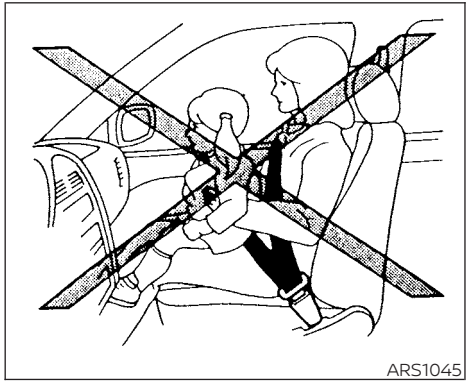
ARS1045

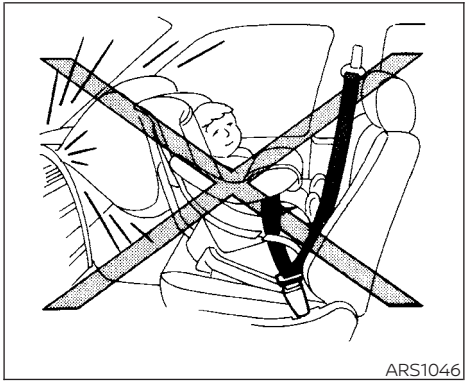
ARS1046

⚠WARNING

- **Even with the NISSAN Advanced Air Bag System, never install a rear-facing child restraint in the front seat. An inflating front air bag could seriously injure or kill your child. For additional information, see "Child restraints (Type A)" (P. 1-31) or "Child restraints (Type B)" (P. 1-54).**

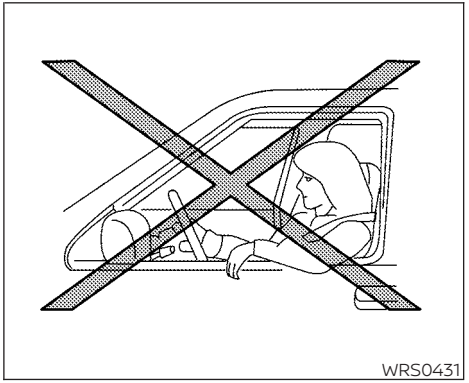
WRS0431

⚠WARNING

Front, front central and rear outboard seat-mounted side-impact supplemental air bags and roof-mounted curtain side-impact and rollover supplemental air bags:

- **The side air bags and curtain air bags ordinarily will not inflate in the event of a frontal impact, rear impact, or lower severity side collision. Always wear your seat belts to help reduce the risk or severity of injury in various kinds of accidents.**

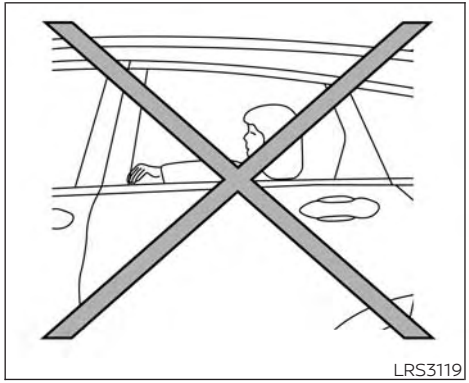
LRS3119

⚠WARNING

- **The seat belts, the side air bags and curtain air bags are most effective when you are sitting well back and upright in the seat with both feet on the floor. The side air bag and curtain air bag inflate with great force. Do not allow anyone to place their hand, leg or face near the side air bag on the side of the seatback of the front and rear seat or near the side roof rails. Do not allow anyone sitting in the front seats or rear outboard seats to extend their hand out of the window or lean against the door. Some examples of dangerous riding positions are shown in the previous illustrations.**

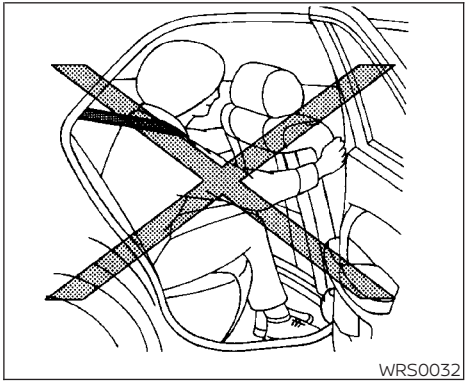
WRS0032

⚠WARNING

- **When sitting in the rear seat, do not hold onto the seatback of the front seat. If the side air bag inflates, you may be seriously injured. Be especially careful with children, who should always be properly restrained. Some examples of dangerous riding positions are shown in the illustrations.**
- **Do not use seat covers on the front or rear seatbacks. They may interfere with side air bag inflation.**

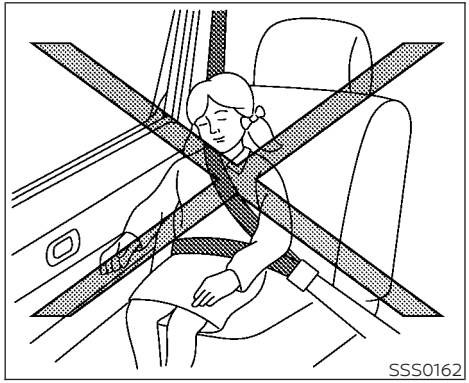
SSS0162

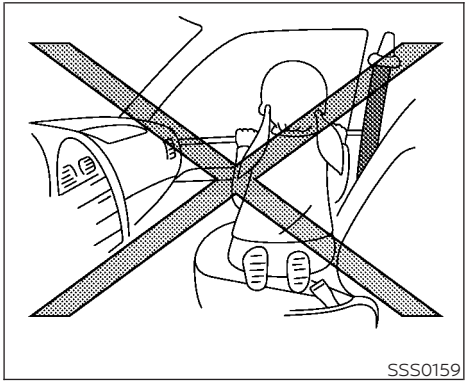
SSS0159

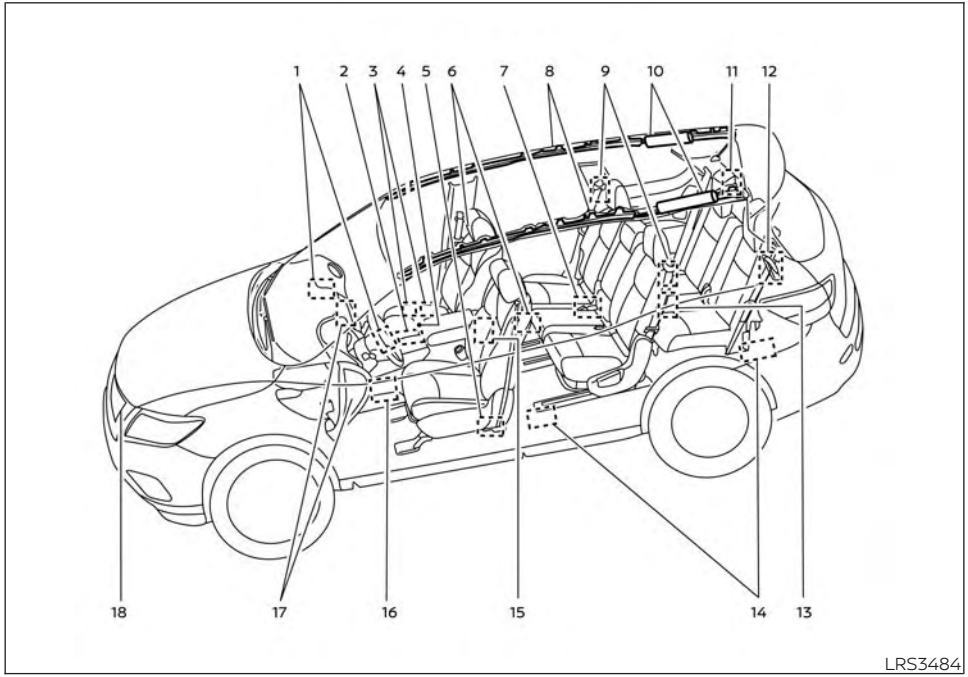

NISSAN Advanced Air Bag System (front seats)

1. Supplemental front-impact air bag modules
2. Air bag Control Unit (ACU)
3. Occupant classification system control unit
4. Occupant classification sensor (weight sensor)
5. Seat belt with pretensioner(s) (front seats) (driver's side shown; front passenger side similar)
6. Front seat-mounted side-impact supplemental air bag modules
7. Seat belt (2nd row center seat (if so equipped))
8. Roof-mounted curtain side-impact and rollover supplemental air bags
9. 2nd row outboard seat-mounted side-impact supplemental air bag modules (if so equipped)
10. Roof-mounted curtain side-impact and rollover supplemental air bag inflators
11. Seat belt (3rd row center seat)
12. Seat belt (3rd row outboard seat; driver's side shown; passenger's side similar)
13. Seat belt with pretensioner(s) (2nd row outboard seats) (if so equipped)
14. Satellite sensors (driver's side shown; passenger side similar)

15. Front central seat-mounted side-impact supplemental air bag (if so equipped)
16. Pressure sensors in door (driver's side shown; front passenger side similar)
17. Driver and front passenger supplemental knee air bags (if so equipped)
18. Crash zone sensor

⚠ WARNING

To ensure proper operation of the passenger's NISSAN Advanced Air Bag System, please observe the following items.

- **Do not allow a passenger in the 2nd row captain's chair or 2nd row bench seats to push or pull on the seatback pocket.**
- **Do not place heavy loads heavier than 4 kg (9.1 lbs.) on the seatback, head restraint or in the seatback pocket.**
- **Make sure that there is nothing pressing against the rear of the seatback, such as a child restraint installed in the rear seat or an object stored on the floor.**
- **Make sure that there is no object placed under the front passenger seat.**
- **Make sure that there is no object placed between the seat cushion and center console or between the seat cushion and the door.**
- **If a forward-facing child restraint is installed in the front passenger seat, do not position the front passenger seat so the child restraint contacts the instrument panel. If the child restraint does contact the instrument panel, the system may determine the seat is occupied and the front passenger air bag and front passenger supplemental knee air bag may deploy in a collision. Also the front passenger air bag status light may not illuminate. For additional information about installing and using child restraints, see "Child restraints (Type A) (P. 1-31) or "Child restraints (Type B) (P. 1-54).**
- **Confirm the operating condition with the front passenger air bag status light.**
- **If you notice that the front passenger air bag status light is not operating as described in this section, get the occupant classification system checked. It is recommended that you visit a NISSAN dealer for this service.**
- **Until you have confirmed with a dealer that your passenger seat occupant classification system is working properly, position the occupants in the rear seating positions.**
- **Do not position the front passenger seat so it contacts the rear seat. If the front seat does contact the rear seat, the air bag system may determine a sensor malfunction has occurred and the front passenger air bag status light may illuminate and the supplemental air bag warning light may flash.**

This vehicle is equipped with the NISSAN Advanced Air Bag System for the driver and front passenger seats. **All of the information, cautions and warnings in this manual still apply and must be followed.**

The driver supplemental front-impact air bag is located in the center of the steering wheel. The front passenger supplemental front-impact air bag is mounted in the instrument panel above the glove box. The front air bags are designed to inflate in higher severity frontal collisions, although they may inflate if the forces in another type of collision are similar to those of a higher severity frontal impact. They may not inflate in certain frontal collisions. Vehicle damage (or lack of it) is not always an indication of proper front air bag system operation.

The NISSAN Advanced Air Bag System monitors information from the crash zone sensor, the Air bag Control Unit (ACU), seat belt buckle sensors and occupation classification sensor (weight sensor). Inflator operation is based on the severity of a collision and seat belt usage for the driver. For the front passenger, the occupant classification sensor is also monitored. Based on information from the sensor, only one front air bag may inflate in a crash, depending on the crash severity and whether the front occupants are belted or unbelted. Additionally, the front passenger air bag and the front passenger (if so equipped) supplemental knee air bag may be automatically turned off under some conditions, depending on the weight detected on the front passenger seat and how the seat belt is used. If the front passenger air bag and front passenger supplemental knee (if so equipped) air bag is OFF, the front passenger air bag status light will be illuminated. For additional information, see "Front passenger air bag and status light" (P. 1-91). One front air bag inflating does not indicate improper performance of the system.

If you have any questions about your air bag system, it is recommended that you visit a NISSAN dealer to obtain information about the system. If you are considering modification of your vehicle due to a disability, you may also contact NISSAN. Contact information is contained in the front of this Owner's Manual.

When a front air bag inflates, a fairly loud noise may be heard, followed by the release of smoke. This smoke is not harmful and does not indicate a fire. Care should be taken to not inhale it, as it may cause irritation and choking. Those with a history of a breathing condition should get fresh air promptly.

Front air bags, along with the use of seat belts, help to cushion the impact force on the face and chest of the front occupants. They can help save lives and reduce serious injuries. However, an inflating front air bag may cause facial abrasions or other injuries. Front air bags, other than the driver and front passenger's knee air bags, do not provide restraint to the lower body.

Even with NISSAN Advanced Air Bags, seat belts should be correctly worn and the driver and front passenger seated upright as far as practical away from the steering wheel or instrument panel. The front air bags inflate quickly in order to help protect the front occupants. Because of this, the force of the front air bag inflating can increase the risk of injury if the occupant is too close to, or is against, the front air bag module during inflation.

The front air bags deflate quickly after a collision.

The front air bags operate only when the ignition switch is in the ON position.

After placing the ignition switch in the ON position, the supplemental air bag warning light illuminates. The supplemental air bag warning light will turn off after about 7 seconds if the system is operational.



Front passenger air bag and status light

⚠WARNING

The front passenger air bag and front passenger supplemental knee air bag (if so equipped) are designed to automatically turn OFF under some conditions. Read this section carefully to learn how it operates. Proper use of the seat, seat belt, and child restraints is necessary for most effective protection. Failure to follow all instructions in this manual concerning the use of seats, seat belts, and child restraints can increase the risk or severity of injury in an accident.

Status light

The front passenger seat is equipped with an occupant classification sensor (weight sensor) that turns the front passenger air bag and front passenger supplemental knee air bag (if so equipped) on or off depending on the weight applied to the front passenger seat. The status of the front passenger air bag and front passenger supplemental knee air bag (if so equipped) (ON or OFF) is indicated by the front passenger air bag status lights and which is located on the instrument panel.

After the ignition switch is placed in the "ON" position, the front passenger air bag status lights on the instrument panel illuminate for about 7 seconds and then turn off or remain illuminated depending on the front passenger seat occupied status. The lights operate as follows:

CONDITION	DESCRIPTION	PASSENGER AIR BAG STATUS LIGHT	FRONT PASSENGER AIR BAG AND FRONT PASSENGER SUPPLEMENTAL KNEE AIR BAG (if so equipped) STATUS
Empty	Empty front passenger seat	Air bag OFF (illuminated)	INHIBITED
Nobody/Somebody	Bag or Child or Child Restraint or Small Adult in front passenger seat	Air bag OFF (illuminated)	INHIBITED
Adult	Adult in the front passenger seat	Air bag ON (illuminated)	ACTIVATED

In addition to the above, certain objects placed on the front passenger seat may also cause the lights to operate as described above depending on their weight.

For additional information related to the normal operation and troubleshooting of this occupant classification sensor system, see "Normal operation" (P. 1-93) and "Troubleshooting" (P. 1-94).

Front passenger air bag

The front passenger air bag and front passenger supplemental knee air bag (if so equipped) are designed to automatically turn OFF when the vehicle is operated under some conditions as described below in accordance with U.S. regulations. If the front passenger air bag and front passenger supplemental knee air bag (if so equipped) are OFF, it will not inflate in a crash. The driver air bag and other air bags in your vehicle are not part of this system.

The purpose of the regulation is to help reduce the risk of injury or death from an inflating air bag to certain front passenger seat occupants, such as children, by requiring the air bag to be automatically turned OFF. Certain sensors are used to meet the requirements.

The occupant classification sensor in this vehicle is a weight sensor. It is designed to detect an occupant and objects on the seat by weight. For example, if a child is in the front passenger seat, the NISSAN Advanced Air Bag System is designed to turn the front passenger air bag and front passenger supplemental knee air bag (if so equipped) OFF in accordance with the regulations. Also, if a child restraint of the type specified in the regulations is on the seat, its weight and the child's weight can be detected and cause the air bags to turn OFF.

Front passenger seat adult occupants who are properly seated and using the seat belt as outlined in this manual should not cause the front passenger air bag and front passenger supplemental knee air bag (if so equipped) to be automatically turned OFF. For small adults it may be turned OFF, however if the occupant takes his/her weight off the seat cushion (for example, by not sitting upright, by sitting on an edge of the seat, or by otherwise being out of position), this could cause the sensor to turn the front passenger air bag and front passenger supplemental knee air bag (if so equipped) OFF. Always be sure to be seated and wearing the seat belt properly for the most effective protection by the seat belt and supplemental air bag.

NISSAN recommends that pre-teens and children be properly restrained in a rear seat. NISSAN also recommends that appropriate child restraints and booster seats be properly installed in a rear seat. If this is not possible, the occupant classification sensor is designed to operate as described above to turn the front passenger air bag and front passenger supplemental knee air bag (if so equipped) OFF for specified child restraints as required by the regulations. Failing to properly secure child restraints and to use the ALR mode may allow the restraint to tip or move in a collision or sudden stop. This can also result in the front passenger air bag and front passenger supplemental knee air bag (if so equipped) inflating in a crash instead of being OFF. For additional information, see "Child restraints (Type A)" (P. 1-31) or "Child restraints (Type B)" (P. 1-54).

If the front passenger seat is not occupied, the front passenger air bag and front passenger supplemental knee air bag (if so equipped) are designed not to inflate in a crash. However, heavy objects placed on the seat could result in air bag inflation, because of the object's weight detected by the occupant classification sensor. Other conditions could also result in air bag inflation, such as if a child is standing on the seat, or if two children are on the seat, contrary to the instructions in this manual. Always be sure that you and all vehicle occupants are seated and restrained properly.

Using the front passenger air bag status lights, you can monitor when the front passenger air bag and front passenger supplemental knee air bag (if so equipped) are automatically turned OFF.

If an adult occupant is in the seat but the front passenger air bag OFF status light is illuminated (indicating that the front passenger air bag and front passenger supplemental knee air bag (if so equipped) are OFF), it could be that the person is a small adult, or is not sitting on the seat properly or not using the seat belt properly.

If a child restraint must be used in the front seat, the front passenger air bag OFF status light may or may not be illuminated, depending on the size of the child and the type of child restraint being used. If the air bag ON status light is illuminated (indicating that the front passenger air bag and front passenger supplemental knee air bag (if so equipped) might inflate in a crash), it could be that the child restraint or seat belt is not being used properly. Make sure that the child restraint is installed properly, the seat belt is used properly and the occupant is positioned properly. If the air bag status light is still not illuminated, reposition the occupant or child restraint in a rear seat.

If the front passenger air bag OFF status light will not illuminate even though you believe that the child restraint, the seat belts and the occupant are properly positioned, it is recommended that you take your vehicle to a NISSAN dealer. A NISSAN dealer can check system status by using a special tool. However, until you have confirmed with a dealer that your air bag is working properly, reposition the occupant or child restraint in a rear seat.

The NISSAN Advanced Air Bag System and front passenger air bag status lights will take a few seconds to register a change in the front passenger seat status. This is normal system operation and does not indicate a malfunction.

If a malfunction occurs in the front passenger air bag system, the supplemental air bag warning light , located in the meter and gauges area of the instrument panel, will be illuminated (blinking or steadily lit). Have the system checked. It is recommended that you visit a NISSAN dealer for this service.

Normal operation

In order for the occupant classification sensor system to classify the front passenger based on weight, please follow the precautions and steps outlined below:

Precautions

- Make sure that there are no objects weighing over 4 kg (9.1 lbs.) hanging on the seat or placed in the seatback pocket (if so equipped).
- Make sure that a child restraint or other object is not pressing against the rear of the seatback.
- Make sure that a rear passenger is not pushing or pulling on the back of the front passenger seat.
- Make sure that the front passenger seat or seatback is not forced back against an object on the seat or floor behind it.
- Make sure that there is no object placed under the front passenger seat.

Steps

1. Adjust the seat as outlined in "Seats" (P. 1-2). Sit upright, leaning against the seatback, and centered on the seat cushion with your feet comfortably extended to the floor.
2. Make sure there are no objects on your lap.
3. Fasten the seat belt as outlined in "Seat belts" (P. 1-19). Front passenger seat belt buckle status is monitored by the occupant classification system, and is used as an input to determine occupancy status. So, it is highly recommended that the front passenger fasten their seat belt.
4. Remain in this position for 30 seconds allowing the system to classify the front passenger before the vehicle is put into motion.
5. Ensure proper classification by checking the front passenger air bag status lights.

NOTE:

This vehicle's occupant classification sensor system generally keeps the classification locked during driving, so it is important that you confirm that the front passenger is properly classified prior to driving. However, the occupant classification sensor may recalculate the weight of the occupant under some conditions (both while driving and when stopped), so front passenger seat occupants should continue to remain seated as outlined above.

Troubleshooting

If you think the front passenger air bag status lights are incorrect:

1. If the OFF light ( ) is illuminated with an adult occupying the front passenger seat:

- Occupant is a small adult — the air bag light is functioning as intended. The front passenger air bag and front passenger (if so equipped) supplemental knee air bag are suppressed.

However, if the occupant is not a small adult, then this may be due to the following conditions that may be interfering with the weight sensors:

- Occupant is not sitting upright, leaning against the seatback, and centered on the seat cushion with his/her feet comfortably extended to the floor.
- A child restraint or other object pressing against the rear of the seatback.
- A rear passenger pushing or pulling on the back of the front passenger seat.
- Forcing the front seat or seatback against an object on the seat or floor behind it.
- An object placed under the front passenger seat.
- An object placed between the seat cushion and center console or between the seat cushion and the door.

If the vehicle is moving, please come to a stop when it is safe to do so. Check and correct any of the above conditions. Restart the vehicle and wait 1 minute.

NOTE:

A system check will be performed during which the front passenger air bag status lights will remain lit for about 7 seconds initially.

If the OFF light ( ) is illuminated after this, the person should be advised not to ride in the front passenger seat and the

vehicle should be checked as soon as possible. It is recommended that you visit a NISSAN dealer for this service.

2. If the ON light ( ) is illuminated with a small adult, child or child restraint occupying the front passenger seat.

   This may be due to the following conditions that may be interfering with the weight sensors:

- Small adult or child is not sitting upright, leaning against the seatback, and centered on the seat cushion with his/her feet comfortably extended to the floor.
- The child restraint is not properly installed, as outlined in "Child restraints (Type A)" (P. 1-31) or "Child restraints (Type B)" (P. 1-54).
- An object weighing over 4 kg (9.1 lbs.) hanging on the seat or placed in the seatback pocket (if so equipped).
- A child restraint or other object pressing against the rear of the seatback.
- A rear passenger pushing or pulling on the back of the front passenger seat.
- Forcing the front seat or seatback against an object on the seat or floor behind it.
- An object placed under the front passenger seat.
- An object placed between the seat cushion and center console.

If the vehicle is moving, please come to a stop when it is safe to do so. Check and correct any of the above conditions. Restart the vehicle and wait 1 minute.

NOTE:

A system check will be performed during which the front passenger air bag status lights will remain lit for about 7 seconds initially.

If the ON light ( ) is illuminated after this, the small adult, child or child restraint should be repositioned in a rear seat and the vehicle should be checked as soon as possible. It is recommended that you visit a NISSAN dealer for this service.

3. If the ON light ( ) is illuminated with no front passenger and no objects on the front passenger seat, the vehicle should be checked. It is recommended that you visit a NISSAN dealer as soon as possible.

Other supplemental front-impact air bag precautions

⚠ WARNING

- **Do not place any objects on the steering wheel pad or on the instrument panel. Also, do not place any objects between any occupant and the steering wheel or instrument panel. Such objects may become dangerous projectiles and cause injury if the front air bags inflate.**
- **Immediately after inflation, several front air bag system components will be hot. Do not touch them; you may severely burn yourself.**
- **No unauthorized changes should be made to any components or wiring of the supplemental air bag system. This is to prevent accidental inflation of the supplemental air bag or damage to the supplemental air bag system.**
- **Do not make unauthorized changes to your vehicle's electrical system, suspension system or front end structure. This could affect proper operation of the front air bag system.**

- **Tampering with the front air bag system may result in serious personal injury. Tampering includes changes to the steering wheel and the instrument panel assembly by placing material over the steering wheel pad and above the instrument panel or by installing additional trim material around the air bag system.**
- **Removing or modifying the front passenger seat may affect the function of the air bag system and result in serious personal injury.**
- **Modifying or tampering with the front passenger seat may result in serious personal injury. For example, do not change the front seats by placing material on the seat cushion or by installing additional trim material, such as seat covers, on the seat that are not specifically designed to assure proper air bag operation. Additionally, do not stow any objects under the front passenger seat or the seat cushion and seatback. Such objects may interfere with the proper operation of the occupant classification sensor (weight sensor).**
- **No unauthorized changes should be made to any components or wiring of the seat belt system. This may affect the front air bag system. Tampering with the seat belt system may result in serious personal injury.**
- **It is recommended that you visit a NISSAN dealer for work on and around the front air bag. It is also recommended that you visit a NISSAN dealer for installation of electrical equipment. The Supplemental Restraint System (SRS) wiring harnesses* should not be modified or disconnected. Unauthorized electrical test equipment and probing devices should not be used on the air bag system.**
- **A cracked windshield should be replaced immediately by a qualified repair facility. A cracked windshield could affect the function of the supplemental air bag system.**

***The SRS wiring harness connectors are yellow and orange for easy identification.**

When selling your vehicle, we request that you inform the buyer about the front air bag system and guide the buyer to the appropriate sections in this Owner's Manual.

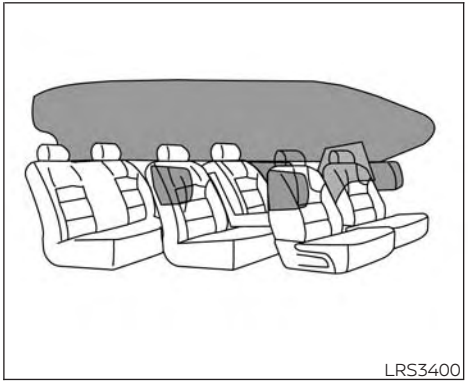
LRS3400

FRONT, 2ND ROW OUTBOARD (if so equipped), AND FRONT CENTRAL (if so equipped) SEAT-MOUNTED SIDE-IMPACT SUPPLEMENTAL AIR BAG AND ROOF-MOUNTED CURTAIN SIDE-IMPACT AND ROLLOVER SUPPLEMENTAL AIR BAG SYSTEMS

The side air bags are located in the outside of the seatback of the front and rear seats (if so equipped). The front central air bag (if so equipped) is located in the inside of

the seatback of the driver's seat. The curtain air bags are located in the side roof rails in all three rows. **All of the information, cautions and warnings in this manual must be followed.** The side air bags and curtain air bags are designed to inflate in higher severity side collisions, although they may inflate if the forces in another type of collision are similar to those of a higher severity impact. They are designed to inflate on the side where the vehicle is impacted. They may not inflate in certain side collisions.

Curtain air bags are also designed to inflate in certain types of rollover collisions or near rollovers. As a result, certain vehicle movements (for example, during severe off-roading) may cause the curtain air bags to inflate.

Vehicle damage (or lack of it) is not always an indication of proper side air bag and curtain air bag operation.

When the side air bags and curtain air bags inflate, a fairly loud noise may be heard, followed by release of smoke. This smoke is not harmful and does not indicate a fire. Care should be taken not to inhale it, as it may cause irritation and choking. Those with a history of a breathing condition should get fresh air promptly.

Side air bags, along with the use of seat belts, help to cushion the impact force on the chest of the front and rear outboard occupants. Front central side air bag, along with the use of seat belts helps cushion the impact force on the head area of the front occupants. Curtain air bags help to cushion the impact force to the head of occupants in the front and rear outboard seating positions in all rows. They can help save lives and reduce serious injuries. However, an inflating side air bag or curtain air bag may cause abrasions or other injuries. Side air bags and curtain air bags do not provide restraint to the lower body.

The seat belts should be correctly worn and the driver, front passenger, and 2nd row outboard occupants seated upright as far as practical away from the side air bag. Rear seat passengers should be seated as far away as practical from the door finishers and side roof rails. The side air bags and curtain air bags inflate quickly in order to help protect the occupants. Because of this, the force of the side air bags and curtain air bags inflating can increase the risk of injury if the occupant is too close to, or is against, these air bag modules during inflation. The side air bag will deflate quickly after the collision is over. The front central side air bag and curtain air bags will remain inflated for a short period of time.

The side air bags and curtain air bags operate only when the ignition switch is placed in the ON position.

After placing the ignition switch in the ON position, the supplemental air bag warning light illuminates. The supplemental air bag warning light will turn off after about 7 seconds if the system is operational.

⚠WARNING

- **Do not place any objects near the seatback of the front seats. Also, do not place any objects (an umbrella, bag, etc.) between the front door finisher and the front seat. Such objects may become dangerous projectiles and cause injury if a side air bag inflates.**
- **Right after inflation, several side air bag and curtain air bag system components will be hot. Do not touch them; you may severely burn yourself.**

- **No unauthorized changes should be made to any components or wiring of the side air bag and curtain air bag systems. This is to prevent damage to or accidental inflation of the side air bag and curtain air bag systems.**
- **Do not make unauthorized changes to your vehicle's electrical system, suspension system or side panel. This could affect proper operation of the curtain air bag systems.**
- **Tampering with the side air bag system may result in serious personal injury. For example, do not change the front seats by placing material near the seatbacks or by installing additional trim material, such as seat covers, around the side air bag.**
- **It is recommended that you visit a NISSAN dealer for work on and around the side air bag and curtain air bag. It is also recommended that you visit a NISSAN dealer for installation of electrical equipment. The SRS wiring harnesses* should not be modified or disconnected. Unauthorized electrical test equipment and probing devices should not be used on the side air bag or curtain air bag systems.**

***The SRS wiring harness or connectors are yellow or orange for easy identification.**

When selling your vehicle, we request that you inform the buyer about the side air bags and curtain air bag system and guide the buyer to the appropriate sections in this Owner's Manual.

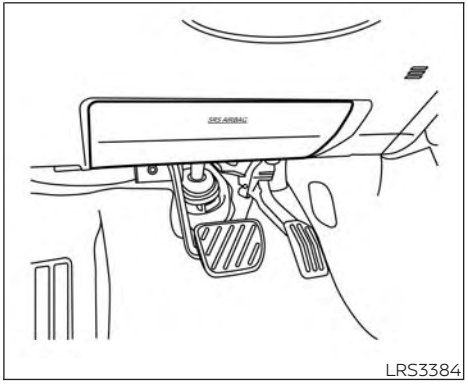

Driver's side

DRIVER AND FRONT PASSENGER SUPPLEMENTAL KNEE AIR BAG (if so equipped)

The knee air bag is located in the knee bolster, on the driver's and passenger's side. **All of the information, cautions and warnings in this manual apply and must be followed.** The knee air bag is designed to inflate in higher severity frontal collisions, although it may inflate if the forces in another type of collision are similar to those of a higher severity frontal impact. It may not inflate in certain collisions.

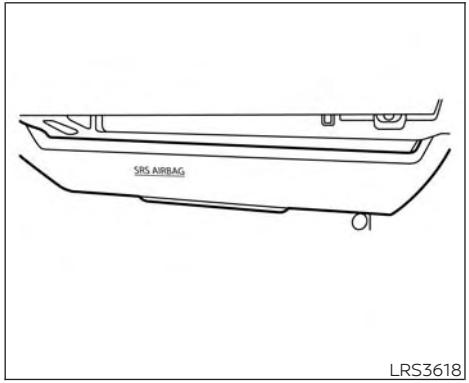

Passenger's side (if so equipped)

Vehicle damage (or lack of it) is not always an indication of proper knee air bag operation.

When the knee air bag inflates, a fairly loud noise may be heard, followed by release of smoke. This smoke is not harmful and does not indicate a fire. Care should be taken not to inhale it, as it may cause irritation and choking. Those with a history of a breathing condition should get fresh air promptly.

The knee air bag helps to cushion the impact force on the knees of the driver and passenger. It can help reduce serious injuries. However, an inflating knee air bag may cause abrasions or other injuries. The knee air bag provides restraint to the lower body.

The knee air bag inflates quickly in order to help protect the occupants. Because of this, the force of the knee air bag inflating can increase the risk of injury if the occupant is too close to, or is against, this air bag module during inflation. The knee air bag will deflate quickly after the collision is over OR the knee air bag will remain inflated for a short time.

The knee air bag operates only when the ignition switch is placed in the ON position.

After placing the ignition switch in the ON position, the supplemental air bag warning light illuminates. The supplemental air bag warning light will turn off after about 7 seconds if the system is operational.

⚠WARNING

- **Do not place any objects between the knee bolster and the driver's or passenger's seat. Such objects may become dangerous projectiles and cause injury if a knee air bag inflates.**
- **Right after inflation, the knee air bag system components will be hot. Do not touch them; you may severely burn yourself.**
- **No unauthorized changes should be made to any components or wiring of the knee air bag system. This is to prevent damage to or accidental inflation of the knee air bag system.**
- **Do not make unauthorized changes to your vehicle's electrical system or suspension system. This could affect proper operation of the knee air bag system.**
- **Tampering with the knee air bag system may result in serious personal injury. For example, do not change the driver or passenger knee bolster or install additional trim material around the knee air bag.**

- **It is recommended that you visit a NISSAN dealer for work on and around the knee air bag. It is also recommended that you visit a NISSAN dealer for installation of electrical equipment. The SRS wiring harnesses* should not be modified or disconnected. Unauthorized electrical test equipment and probing devices should not be used on the knee air bag system.**

***The SRS wiring harness or connectors are yellow or orange for easy identification.**

When selling your vehicle, we request that you inform the buyer about the knee air bag system and guide the buyer to the appropriate sections in this manual.

SEAT BELT WITH PRETENSIONER(s) FRONT AND 2ND ROW OUTBOARD SEATS (if so equipped)

⚠ WARNING

- **The pretensioner(s) cannot be reused after activation. They must be replaced together with the retractor and buckle as a unit.**
- **If the vehicle becomes involved in a collision but pretensioner(s) are not activated, be sure to have the pretensioner system checked and, if necessary, replaced. It is recommended that you visit a NISSAN dealer for this service.**
- **No unauthorized changes should be made to any components or wiring of the pretensioner system. This is to prevent damage to or accidental activation of the pretensioner(s). Tampering with the pretensioner system may result in serious personal injury.**
- **It is recommended that you visit a NISSAN dealer for work on and around the pretensioner system. It is also recommended that you visit a NISSAN dealer for installation of electrical equipment. Unauthorized electrical test equipment and probing devices should not be used on the pretensioner system.**
- **If you need to dispose of the pretensioner(s) or scrap the vehicle, it is recommended that you visit a NISSAN dealer for this service. Incorrect disposal procedures could cause personal injury.**

The pretensioner system may activate with the supplemental air bag system in certain types of collisions. Working with the seat belt retractor, the pretensioner(s) help tighten the seat belt when the vehicle becomes involved in certain types of collisions, helping to restrain front and 2nd row outboard seat occupants.

The pretensioner(s) are encased within the seat belt retractor and to the seat belt anchor affixed to the floor of the vehicle. These seat belts are used the same way as conventional seat belts.

When pretensioner(s) activate, smoke is released and a loud noise may be heard. This smoke is not harmful and does not indicate a fire. Care should be taken not to inhale it, as it may cause irritation and choking. Those with a history of a breathing condition should get fresh air promptly.

After the pretensioner(s') activation, load limiters allow the seat belt to release webbing (if necessary) to reduce forces against the chest.

The supplemental air bag warning light is used to indicate malfunctions in the pretensioner system. For additional information, see "Supplemental air bag warning light" (P. 1-103). If the operation of the supplemental air bag warning light indicates there is a malfunction, have the system checked. It is recommended that you visit a NISSAN dealer for this service.

When selling your vehicle, we request that you inform the buyer about the pretensioner system and guide the buyer to the appropriate sections in this Owner's Manual.

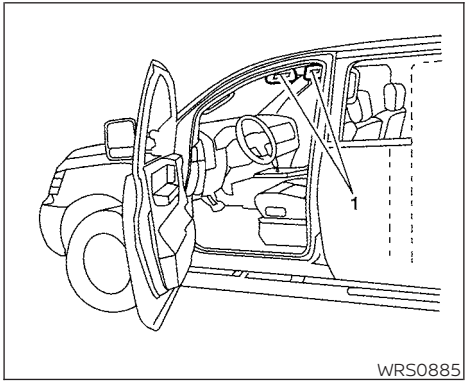

1. SRS Air bag warning labels

   The warning labels are located on the surface of the sun visor.

SUPPLEMENTAL AIR BAG WARNING LABELS (Type A)

Warning labels about the supplemental front-impact air bag system are placed in the vehicle as shown in the illustration.

⚠WARNING

Do not use a rear-facing child restraint on a seat protected by an air bag in front of it. If the air bag deploys, it may cause serious injury or death.

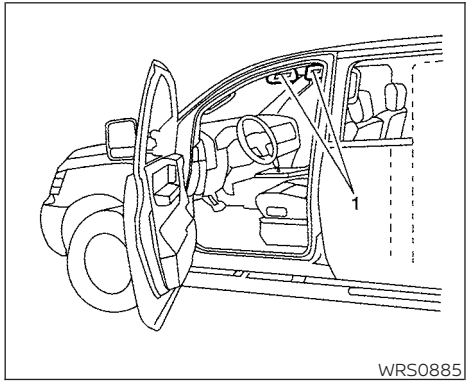

SUPPLEMENTAL AIR BAG WARNING LABELS TYPE B (if so equipped)

1. SRS air bag warning labels

   The warning labels are located on the surface of the sun visor and on the side of the glove box (if so equipped)

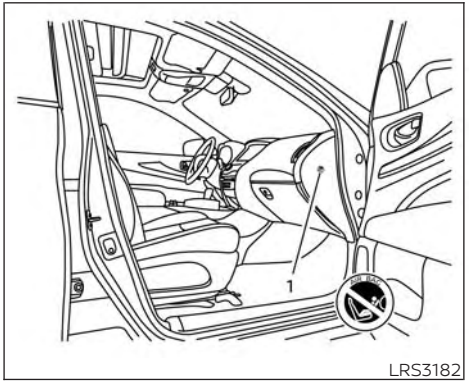

Passenger's side (if so equipped)

Warning labels about the supplemental front-impact air bag system are placed in the vehicle as shown in the illustration.

The label warns you not to fit a rear-facing child restraint system on the front passenger seat as such a restraint system used in this position could cause serious injury to the infant in case of an air bag deployment during a collision.



The label warns:

⚠WARNING

"NEVER use a rearward facing child restraint on a seat protected by an ACTIVE AIR BAG in front of it, DEATH or SERIOUS INJURY to the CHILD can occur."

In vehicles equipped with a front-impact passenger air bag system, use a rear-facing child restraint system only in the rear seats.

When installing a child restraint system in your vehicle, always follow the child restraint system manufacturer's instructions for installation. For additional information, see "Child restraints (Type B)" (P. 1-54).


LRS0100

SUPPLEMENTAL AIR BAG WARNING LIGHT

The supplemental air bag warning light, displaying in the instrument panel, monitors the circuits for the air bag systems, pretensioner(s) and all related wiring.

When the ignition switch is placed in the ON position, the supplemental air bag warning light illuminates for about 7 seconds and then turns off. This means the system is operational.

If any of the following conditions occur, the front air bag, side air bag, curtain air bag, knee air bag and pretensioner systems need servicing:

- The supplemental air bag warning light remains on after approximately 7 seconds.
- The supplemental air bag warning light flashes intermittently.
- The supplemental air bag warning light does not come on at all.

Under these conditions, the front air bag, side air bag, curtain air bag or pretensioner systems may not operate properly. They must be checked and repaired. It is recommended that you visit a NISSAN dealer for this service.

⚠WARNING

If the supplemental air bag warning light is on, it could mean that the front air bag, side air bag, curtain air bag, knee air bag and/or pretensioner systems will not operate in an accident. To help avoid injury to yourself or others, have your vehicle checked as soon as possible. It is recommended that you visit a NISSAN dealer for this service.

Repair and replacement procedure

The front air bags, side air bags, curtain air bags, knee air bag and pretensioner(s) are designed to inflate on a one-time-only basis. As a reminder, unless it is damaged, the supplemental air bag warning light remains illuminated after inflation has occurred. These systems should be repaired and/or replaced as soon as possible. It is recommended that you visit a NISSAN dealer for this service.

When maintenance work is required on the vehicle, the front air bags, side air bags, curtain air bags, knee air bag, pretensioner(s) and related parts should be pointed out to the person performing the maintenance. The ignition switch should always be in the LOCK position when working under the hood or inside the vehicle.

⚠WARNING

- **Once a front air bag, side air bag, curtain air bag, or knee air bag has inflated, the air bag module will not function again and must be replaced. Additionally, the activated pretensioner(s) must also be replaced. The air bag module and pretensioner(s) should be replaced. The air bag module and pretensioner(s) cannot be repaired.**
- **The front air bag, side air bag, curtain air bag, knee air bag systems and the pretensioner system should be inspected if there is any damage to the front end or side portion of the vehicle. It is recommended that you visit a NISSAN dealer for this service.**
- **If you need to dispose of a supplemental air bag or pretensioner systems or scrap the vehicle, it is recommended that you visit a NISSAN dealer for this service. Incorrect disposal procedures could cause personal injury.**
- **If there is an impact to your vehicle from any direction, your Occupant Classification Sensor (OCS) should be checked to verify it is still functioning correctly. It is recommended that you visit a NISSAN dealer for this service. The OCS should be checked even if no air bags deploy as a result of the impact. Failure to verify proper OCS function may result in an improper air bag deployment resulting in injury or death.**

2 Instruments and controls

Instrument panel 2-4
Meters and gauges 2-6
Speedometer and odometer 2-6
Tachometer 2-8
Engine coolant temperature gauge 2-9
Fuel gauge 2-10
Distance To Empty (DTE) 2-11
Warning lights, indicator lights and audible reminders 2-12
Checking lights 2-14
Warning/Indicator lights (red) 2-14
Warning/Indicator lights (yellow) 2-17
Warning/Indicator lights (other) 2-22
Audible reminders 2-23
Vehicle information display 7 inch (18 cm) Type A (if so equipped) 2-24
How to use the vehicle information display 2-24
Startup display 2-25
Trip computer 2-26
Oil control system (if so equipped) 2-29
Settings 2-30
Vehicle information display warnings and indicators 2-40
Vehicle information display 12.3 inch (31 cm) Type B (if so equipped) 2-49
How to use the vehicle information display 2-49
Startup display 2-50
Trip computer 2-51
Changing the meter screen view 2-54
Oil control system (if so equipped) 2-55
Settings 2-56
Vehicle information display warnings and indicators 2-66
Security systems 2-77
Vehicle security system 2-77
NISSAN Vehicle Immobilizer System 2-78
Wiper and washer switch 2-79
Switch operation 2-79
Rain-sensing auto wiper system (if so equipped) 2-81
Rear switch operation 2-82
Rear window and outside mirror defogger switch 2-83
Headlight and turn signal switch 2-83
Headlight control switch 2-83

LED Daytime Running Lights (DRL) system (Type A) 2-89
LED Daytime Running Lights (DRL) system (Type B) 2-90
Instrument brightness control 2-90
Turn signal switch 2-90
Front and rear fog light (if so equipped) switch 2-91
Horn 2-92
Climate controlled seat switches (if so equipped) 2-92
Heated seat switches 2-93
Heated 2nd row seat switches (if so equipped) 2-94
Steering Assist switch (for vehicles with ProPILOT Assist) (if so equipped) 2-95
Hill descent control switch (if so equipped) 2-95
Warning systems switch (for vehicles without ProPILOT Assist) (if so equipped) 2-96
Head Up Display (HUD) (if so equipped) 2-97
How to use the HUD 2-98
Driver Assistance/Navigation linking 2-99
Emergency call (SOS) button (Type A) (if so equipped) 2-101
Emergency Services Call ECall/SOS System (Type B) (if so equipped) 2-102
Automatic Emergency Call 2-102
Rear Door Alert (if so equipped) 2-104
Power outlets 2-105
12v outlets 2-105
120v outlet (if so equipped) 2-106
USB/iPod® charging ports 2-107
Wireless charger (if so equipped) 2-108
Wireless charger indicator 2-109
Wireless charger operation 2-109
Extended storage switch 2-110
Storage 2-111
Front-door pockets 2-111
Lower console storage tray 2-111
Seatback pockets 2-112
Storage trays 2-112
Glove box 2-113
Console box 2-114
2nd row console (if so equipped) 2-114

Overhead sunglasses storage 2-115
Cup holders 2-116
Cargo area storage bin 2-118
Luggage hooks 2-119
Roof rack (if so equipped) 2-119
Windows 2-120
Power windows 2-120
Rear door sunshade (if so equipped) 2-123
Power moonroof (if so equipped) 2-124
Automatic moonroof and sunshade 2-124
Interior lights 2-126
Map lights 2-127
Personal lights 2-127
Cargo light 2-127
HomeLink® Universal Transceiver (Type A) (if so equipped) 2-128
Programming HomeLink® 2-129
Programming HomeLink® for gate openers 2-131
Operating the HomeLink® Universal Transceiver 2-131
Programming trouble-shooting 2-131
Clearing the programmed information 2-131
Reprogramming a single HomeLink® button 2-132
If your vehicle is stolen 2-132
HomeLink® Universal Transceiver (Type B) (if so equipped) 2-133
Programming HomeLink® 2-133
Using the garage door Two-Way Communication 2-136
Programming HomeLink® for gate openers 2-137
Operating the HomeLink® Universal Transceiver 2-137
Programming trouble-shooting 2-137
Clearing the programmed information 2-138
Reprogramming a single HomeLink® button 2-138
If your vehicle is stolen 2-138

INSTRUMENT PANEL

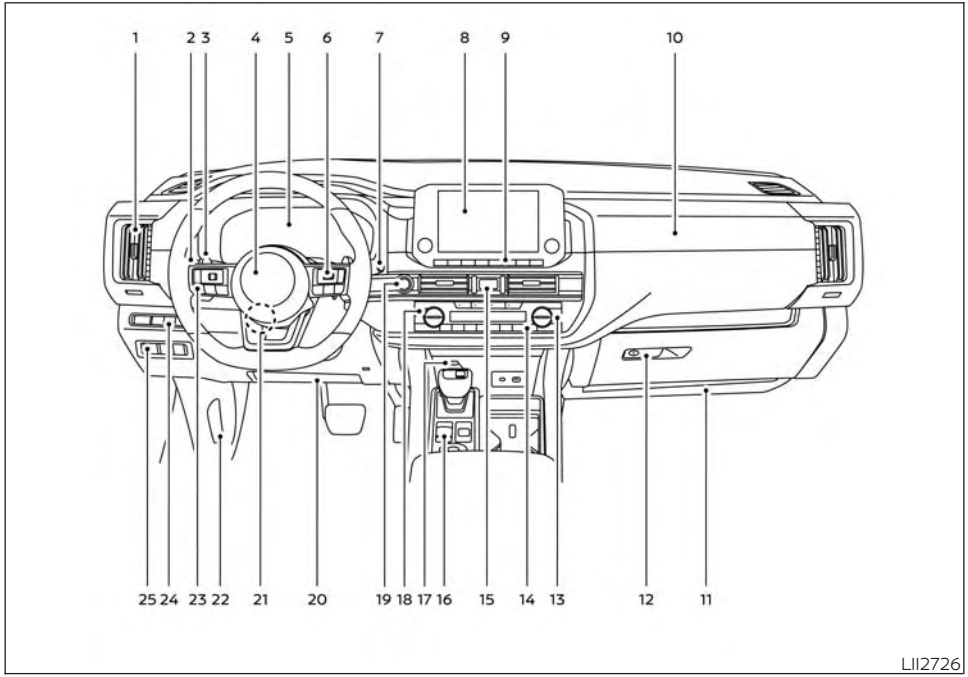

Left Hand Drive shown, Right Hand Drive similar

1. Vents (P. 4-31)
2. Headlight/fog light (if so equipped)/ turn signal switch (P. 2-83, 2-91)
3. Paddle shifter (P. 5-24)
4. Driver supplemental air bag (P. 1-80)
   Horn (P. 2-92)
5. Meters and gauges (P. 2-6)
   Warning and indicator lights (P. 2-12)
   Vehicle information display (P. 2-24 or 2-49)
6. Cruise control switches (if so equipped) (P. 5-103)
   ProPILOT Assist switches (if so equipped) (P. 5-133)
   Bluetooth® Hands-Free Phone System*
7. Wiper and washer switch (P. 2-79)
   Rear window wiper and washer switch (P. 2-82)
8. Center display*
   Navigation system* (if so equipped)
9. Audio controls*
10. Front passenger supplemental air bag (P. 1-80)
11. Front passenger supplemental knee air bag (if so equipped) (P. 1-98)
12. Glove box (P. 2-113)

13. Passenger heated seat switch (P. 2-93)
    Passenger climate-controlled seat switch (if so equipped) (P. 2-92)
14. Automatic heater and air conditioning controls (P. 4-32)
15. Hazard warning flasher switch (P. 6-2)
16. Electronic parking brake (P. 5-27)
    Automatic brake hold switch (P. 5-29)
17. Power outlet (P. 2-105)
18. Driver heated seat switch (P. 2-93)
    Driver climate-controlled seat switch (if so equipped) (P. 2-92)
19. Push-button ignition switch (P. 5-15)
20. Driver supplemental knee air bag (P. 1-98)
21. Tilt and telescopic steering wheel control (P. 3-34)
22. Hood release (P. 3-24)
23. Control panel and vehicle information display switches (P. 2-24, 2-49)
24. Liftgate instrument panel switch (P. 3-24)
    Steering Assist switch (if so equipped) (P. 2-95)
    Instrument brightness control switch (P. 2-90)
    Head Up Display (HUD) switch (if so equipped) (P. 2-97)
25. Manual headlight aiming switch (if so equipped) (P. 2-86)

*: Refer to the separate NissanConnect® Owner's Manual.

Refer to the page number indicated in parenthesis for operating details.

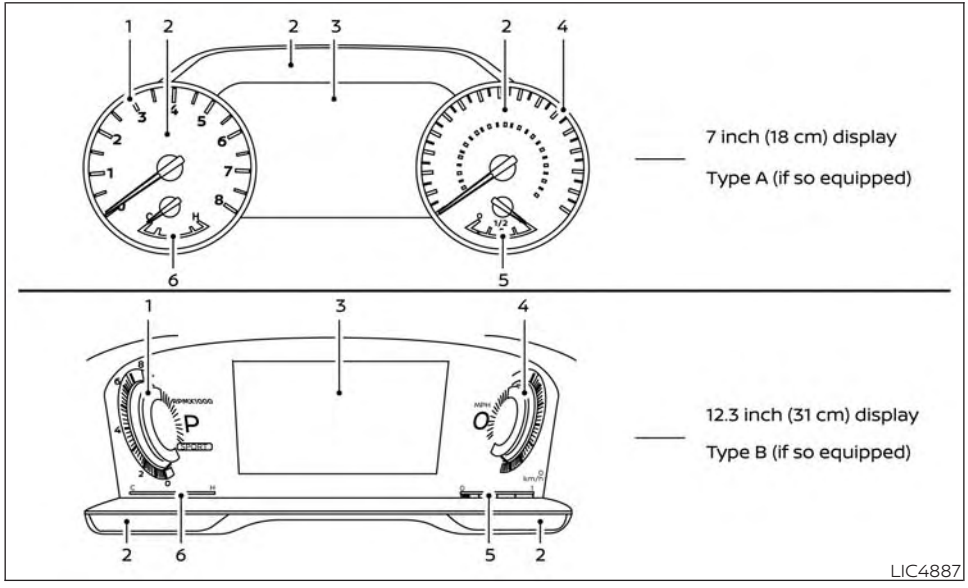

1. Tachometer
2. Warning and indicator lights
3. Vehicle information display
   Odometer
   Twin trip odometer
4. Speedometer
5. Fuel gauge
6. Engine coolant temperature gauge

SPEEDOMETER AND ODOMETER

This vehicle is equipped with a speedometer and odometer. The speedometer is located on the right side of the meter cluster (if so equipped) or the right side of the vehicle information display. The odometer is located within the vehicle information display.

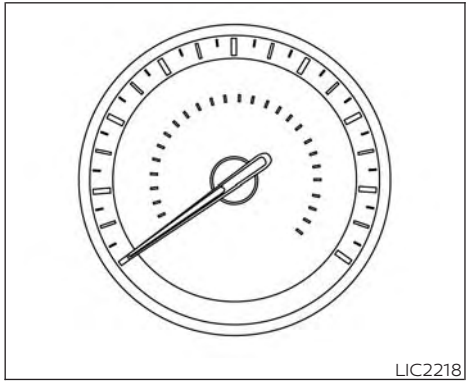

7 inch (18 cm) Type A (if so equipped)

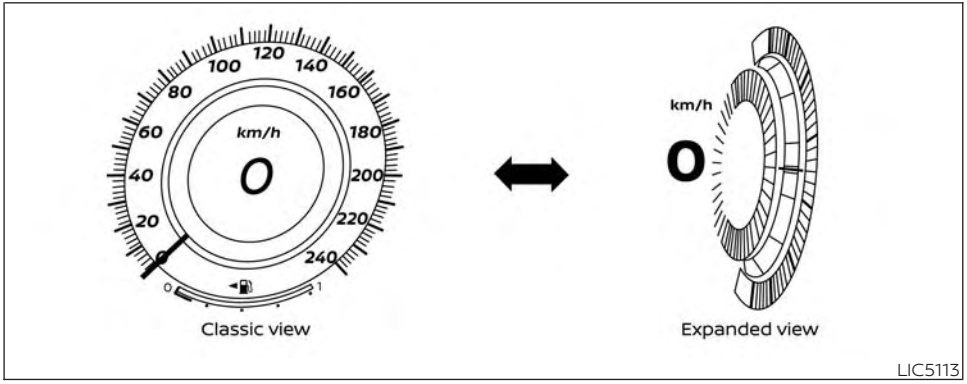

12.3 inch (31 cm) Type B (if so equipped)

Speedometer

The speedometer indicates vehicle speed.

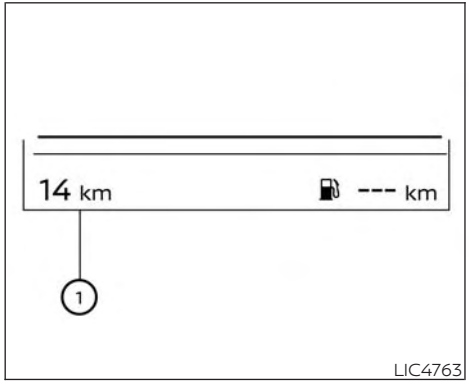

Odometer

The odometer ① is displayed in the vehicle information display when the ignition switch is placed in the ON position.

The odometer records the total distance the vehicle has been driven.

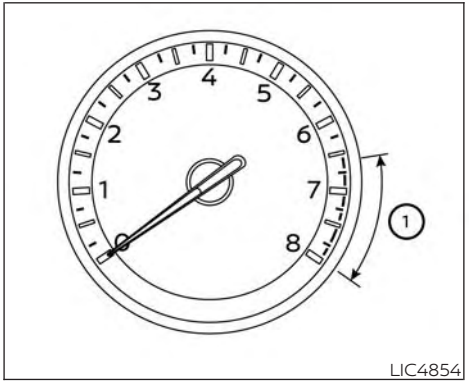

7 inch (18 cm) Type A (if so equipped)

TACHOMETER

The tachometer indicates engine speed in revolutions per minute (rpm). Do not rev the engine into the red zone ①.

⚠ CAUTION

When engine speed approaches the red zone, reduce engine speed. Operating the engine in the red zone may cause serious engine damage.

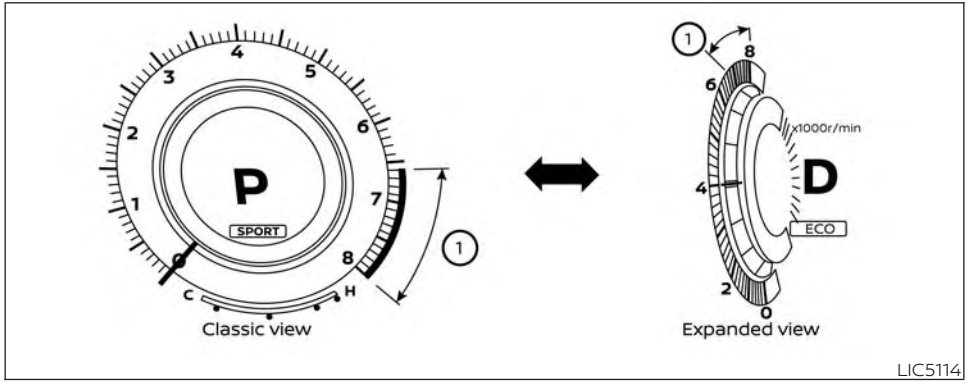

12.3 inch (31 cm) Type B (if so equipped)

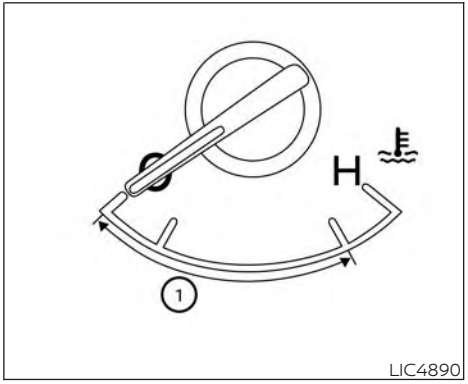

7 inch (18 cm) Type A (if so equipped)

ENGINE COOLANT TEMPERATURE GAUGE

The gauge indicates the engine coolant temperature. The engine coolant temperature is within the normal range ① when the gauge points within the zone shown in the illustration.

The engine coolant temperature varies with the outside air temperature and driving conditions.

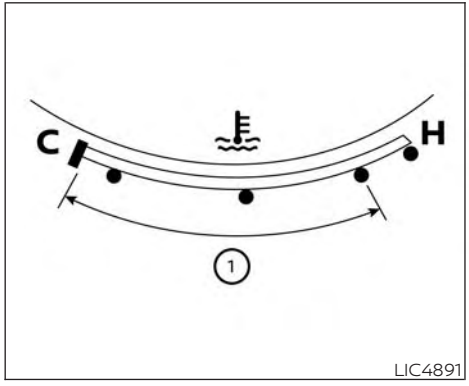

12.3 inch (31 cm) Type B (if so equipped)

⚠CAUTION

If the gauge indicates coolant temperature near the hot (H) end of the normal range, reduce vehicle speed to decrease temperature. If the gauge is over the normal range, stop the vehicle as soon as safely possible. If the engine is overheated, continued operation of the vehicle may seriously damage the engine. For additional information, see "If your vehicle overheats" (P. 6-18).

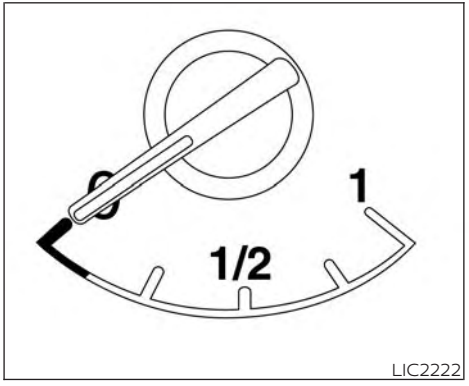

7 inch (18 cm) Type A (if so equipped)

FUEL GAUGE

The gauge indicates the **approximate** fuel level in the tank.

The gauge may move slightly during braking, turning, acceleration, or going up or down hills.

The gauge returns to 0 (Empty) after the ignition switch is placed in the OFF position.

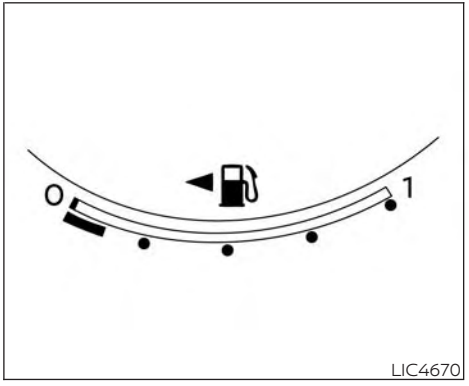

12.3 inch (31 cm) Type B (if so equipped)

The low fuel warning message shows in the vehicle information display when the amount of fuel in the tank is getting low.

Refill the fuel tank before the gauge registers 0 (Empty).

The ◀⛽ indicates that the fuel-filler door is located on the driver's side of the vehicle.

⚠CAUTION

- **If the vehicle runs out of fuel, the Malfunction Indicator Light (MIL) may come on. Refuel as soon as possible. After a few driving trips, the light should turn off. If the light remains on after a few driving trips, have the vehicle inspected. It is recommended that you visit a NISSAN dealer for this service.**
- **For additional information, see "Malfunction Indicator Light (MIL)" (P. 2-21) or "Malfunction Indicator (MIL)" (P. 2-69).**

DISTANCE TO EMPTY (DTE)

Displays the estimated distance the vehicle can be driven before refueling. The value is calculated based on recent fuel economy, the amount of fuel remaining in the fuel tank, and the actual fuel consumption.

Changes in driving patterns or conditions can cause the DTE value to vary. As a result, the value displayed may differ from the actual distance that can be driven.

DTE display will change to "---" when the fuel level in the tank is getting low, prior to the fuel gauge reaching 0 (Empty).

NOTE:

- **The DTE value after refill is estimated based on recent fuel economy and amount of fuel added.**
- **If a small amount of fuel is added, or the ignition is on during refueling, the display may not be updated.**
- **Conditions that affect the fuel economy will also affect the estimated DTE value (city/highway driving, idle time, remote start time, terrain, seasonal weather, added vehicle weight, added deflectors, roof racks, etc.).**

WARNING LIGHTS, INDICATOR LIGHTS AND AUDIBLE REMINDERS

Warning/Indicator light (red)	Warning/Indicator light (yellow)	Warning/Indicator light (other)
 Brake warning light	 Anti-lock Braking System (ABS) warning light	 Automatic brake hold indicator light (white/green) (if so equipped)
 Charge warning light	 Electric power steering warning light	 Front fog light indicator light (green) (if so equipped)
 Electric shift control system warning light (if so equipped)	 Electronic parking brake warning light	 High Beam Assist indicator light (green) (if so equipped)
 Electronic parking brake indicator light	 Front passenger air bag status light	 High beam indicator light (blue) (if so equipped)
 Engine oil pressure warning light (if so equipped)	 Front passenger air bag status light (if so equipped)	 Side light and headlight indicator light (green) (if so equipped)
 Master warning light (if so equipped)	 Hill descent control system ON indicator light (if so equipped)	 Turn signal/hazard indicator lights (green) (if so equipped)
 Seat belt warning light and chime (if so equipped)	 Intelligent Emergency Braking system warning light (if so equipped)	
 Steering Assist Hands Off warning light (if so equipped)	 Intelligent Emergency Braking with Pedestrian Detection system warning light (if so equipped)	

Warning/Indicator light (red)	Warning/Indicator light (yellow)	Warning/Indicator light (other)
 Supplemental air bag warning light	 Low tire pressure warning light (if so equipped)  Malfunction Indicator Light (MIL) (if so equipped)  Master warning light (if so equipped)  Rear Automatic Braking (RAB) system warning light (if so equipped)  Rear fog light indicator light (if so equipped)  Slip indicator light  Speed [120 km/h (75 mph)] warning light (if so equipped)  Vehicle Dynamic Control (VDC) or Electronic Stability Program (ESP) OFF indicator light	

CHECKING LIGHTS

With all doors closed, apply the parking brake, fasten the seat belts and place the ignition switch in the ON position without starting the engine. The following lights (if so equipped) will come on:

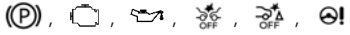

The following lights (if so equipped) will come on briefly and then go off:

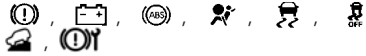

If any light does not come on or operate in a way other than described, it may indicate a burned-out bulb and/or a system malfunction. Have the system checked. It is recommended that you visit a NISSAN dealer for this service.

Some indicators and warnings are also displayed on the vehicle information display between the speedometer and tachometer. For additional information, see "Vehicle information display–7 inch (18 cm) Type A" (P. 2-24) or "Vehicle information display—12.3 inch (31 cm) Type B" (P. 2-49).

WARNING/INDICATOR LIGHTS (red)

For additional information on warnings and indicators, see "Vehicle information display–7 inch (18 cm) Type A" (P. 2-24) or "Vehicle information display—12.3 inch (31 cm) Type B" (P. 2-49).



Brake warning light

Parking brake indicator

When the ignition switch is placed in the ON position, this light comes on when the parking brake is applied.

Low brake fluid warning light

When the ignition switch is placed in the ON position, the light warns of a low brake fluid level. If the light comes on while the engine is running with the parking brake not applied, stop the vehicle and perform the following:

1. Check the brake fluid level. Add brake fluid as necessary. For additional information, see "Brake fluid" (P. 8-16).
2. If the brake fluid level is correct, have the warning system checked. It is recommended that you visit a NISSAN dealer for this service.

⚠ WARNING

- **Your brake system may not be working properly if the warning light is on. Driving could be dangerous. If you judge it to be safe, drive carefully to the nearest service station for repairs. Otherwise, have your vehicle towed because driving it could be dangerous.**
- **Pressing the brake pedal with the engine stopped and/or a low brake fluid level may increase your stopping distance and braking will require greater pedal effort as well as pedal travel.**
- **If the brake fluid level is below the MINIMUM or MIN mark on the brake fluid reservoir, do not drive until the brake system has been checked. It is recommended that you visit a NISSAN dealer for this service.**

Charge warning light

If this light comes on while the engine is running, it may indicate the charging system is not functioning properly. Turn the engine off and check the generator belt. If the belt is loose, broken, or missing, or if the light remains on, have the system checked. It is recommended that you visit a NISSAN dealer for this service.

⚠CAUTION

Do not continue driving if the generator belt is loose, broken or missing.

Electric shift control system warning light (if so equipped)

This light illuminates when a malfunction occurs in the electric shift control system. When the master warning light illuminates, the chime sounds and the following message is displayed in the vehicle information display: "When parked apply parking brake".

When the ignition is placed in the OFF position, the chime sounds continuously. Ensure the parking brake is applied

Have the system checked. It is recommended that you visit a NISSAN dealer for this service.

Electronic parking brake indicator light

This light illuminates when the electronic parking brake system is operating.

When the ignition switch is placed in the ON position, the electronic parking brake indicator light illuminates. When the engine is started and the parking brake is released, the indicator light turns off.

If the parking brake is not released, the electronic parking brake indicator light remains illuminated. Ensure the electronic parking brake indicator light has turned off before driving.

If the electronic parking brake indicator light illuminates or flashes while the electronic parking brake warning light (yellow) illuminates, it may indicate that the electronic parking brake system is not functioning properly. Have the system checked. It is recommended that you visit an NISSAN dealer for this service.

For additional information, see "Electronic parking brake" (P. 5-27).

Engine oil pressure warning light (if so equipped)

This light warns of low engine oil pressure. If the light flickers or comes on during normal driving, pull off the road in a safe area, stop the engine **immediately** and call a NISSAN dealer or other authorized repair shop.

The engine oil pressure warning light is not designed to indicate a low oil level. Use the dipstick to check the oil level. For additional information, see "Engine oil" (P. 8-11).

⚠CAUTION

- **Running the engine with the engine oil pressure warning light on could cause serious damage to the engine almost immediately. Such damage is not covered by warranty. Turn off the engine as soon as it is safe to do so.**
- **The engine oil pressure warning light is not designed to indicate oil level. The oil level should be checked using the dipstick. For additional information, see "Engine oil" (P. 8-11).**

Master warning light (if so equipped)

When the ignition is in the ON position, the master warning light illuminates if a warning message appears in the vehicle information display.

For additional information, see "Vehicle information display–7 inch (18 cm) Type A" (P. 2-24) or "Vehicle information display—12.3 inch (31 cm) Type B" (P. 2-49).

Seat belt warning light and chime (if so equipped)

- The light and chime remind you to fasten the seat belts.
- The seat belt warning light will illuminate when the ignition switch is pushed to the ON position if the driver's seat belt is not fastened, or if the front passenger seat belt is not fastened when occupied.
- The seat belt warning light will also illuminate if a rear passenger seat belt is changed from fastened to unfastened.
- If the driver's seat belt is not fastened when the ignition switch is pushed to the ON position, the chime will sound shortly.
- If the vehicle is driven above 15 km/h (9 mph) in the conditions that illuminate the seat belt warning light, the lamp will begin to blink and the chime will sound for over one minute, or until the seat belt is fastened again.

NOTE:

- **The warning light and/or chime may activate if an object is placed in the unoccupied front passenger seat. In this case, please remove the object from the front passenger seat.**
- **The warning light and/or chime may activate if any seat belt is unfastened before the vehicle comes to a complete stop. Please remain fastened until the vehicle has come to a complete stop.**

Steering Assist Hands Off warning light (if so equipped)

When the Steering Assist is activated, it monitors the driver's steering wheel operation. If the steering wheel is not operated or the driver takes his/her hands off the steering wheel for a period of time, the warning light illuminates. If the driver does not operate the steering wheel after the warning light has been illuminated, an audible alert sounds and the warning flashes in the vehicle information display, followed by a quick brake application to request the driver to take control of the vehicle again. If the driver remains unresponsive, the vehicle will automatically turn on the hazard lights and slow to a complete stop.

For additional information, see "Steering Assist" (P. 5-161).

Supplemental air bag warning light

When the ignition switch is placed in the ON position, the supplemental air bag warning light illuminates for about 7 seconds and then turns off. This means the system is operational.

If any of the following conditions occur, the front air bag, side air bag, curtain air bag, and pretensioner seat belt systems need servicing:

- The supplemental air bag warning light remains on after approximately 7 seconds.
- The supplemental air bag warning light does not come on at all.

It is recommended that you visit a NISSAN dealer for these services.

Unless checked and repaired, the supplemental restraint system (air bag system) and/or the pretensioner(s) may not function properly. For additional information, see "Supplemental Restraint System (SRS)" (P. 1-80).

⚠WARNING

If the supplemental air bag warning light is on, it could mean that the front air bag, side air bag, curtain air bag and/or pretensioner systems will not operate in an accident. To help avoid injury to yourself or others, have your vehicle checked as soon as possible. It is recommended that you visit a NISSAN dealer for this service.

WARNING/INDICATOR LIGHTS (yellow)

For additional information on warnings and indicators, see "Vehicle information display–7 inch (18 cm) Type A" (P. 2-24) or "Vehicle information display—12.3 inch (31 cm) Type B" (P. 2-49).



Anti-lock Braking System (ABS) warning light

When the ignition switch is placed in the ON position, the ABS warning light illuminates and then turns off. This indicates the ABS is operational.

If the ABS warning light illuminates while the engine is running or while driving, it may indicate the ABS is not functioning properly. Have the system checked. It is recommended that you visit a NISSAN dealer for this service.

If an ABS malfunction occurs, the anti-lock function is turned off. The brake system then operates normally but without anti-lock assistance. For additional information, see "Brake system" (P. 5-230).



Electric power steering warning light

⚠WARNING

- **If the engine is not running or is turned off while driving, the power assist for the steering will not work. Steering will be harder to operate.**
- **When the electric power steering warning light illuminates with the engine running, there will be no power assist for the steering. You will still have control of the vehicle, but the steering will be harder to operate. Have the power steering system checked. It is recommended that you visit a NISSAN dealer for this service.**

When the ignition switch is placed in the ON position, the electric power steering warning light illuminates. After starting the engine, the electric power steering warning light turns off. This indicates the power steering is operational.

If the electric power steering warning light illuminates while the engine is running, it may indicate the power steering is not functioning properly and may need servicing. Have the power steering checked. It is recommended that you visit a NISSAN dealer for this service.

When the electric power steering warning light illuminates with the engine running, there will be no power assist for the steering, but you will still have control of the vehicle. At this time, greater steering effort is required to operate the steering wheel, especially in sharp turns and at low speeds.

For additional information, see "Power steering" (P. 5-229).

Electronic parking brake warning light

The electronic parking brake system warning light functions for the electronic parking brake system. If the warning light illuminates, it may indicate the electronic parking brake system is not functioning properly. Have the system checked. It is recommended that you visit a NISSAN dealer for this service.

For additional information, see "Parking brake" (P. 5-27).

Front passenger air bag status light

The front passenger air bag status light will be lit and the passenger front air bag will be off depending on how the front passenger seat is being used.

For additional information, see "Front passenger air bag and status light" (P. 1-91).

Front passenger air bag status light (if so equipped)

The front passenger air bag status light will be lit and the passenger front air bag will be on depending on how the front passenger seat is being used.

For additional information, see "Front passenger air bag and status light" (P. 1-91).

Hill descent control system ON indicator light (if so equipped)

When the ignition switch is placed in the ON position, this light comes on briefly and then turns off.

The light comes on when the hill descent control system is activated.

If the hill descent control switch is on and the indicator light blinks, the system is not engaged.

If the indicator light does not come on when the hill descent switch is on, the system may not be functioning properly. Have the system checked. It is recommended that you visit a NISSAN dealer for this service.

For additional information, see "Hill descent control switch" (P. 2-95) or "Hill descent control system" (P. 5-236).

Intelligent Emergency Braking system warning light (if so equipped)

This light comes on when the ignition switch is placed in the ON position. It turns off after the engine is started.

This light illuminates when the Intelligent Emergency Braking system is set to OFF in the vehicle information display.

If the light illuminates when the Intelligent Emergency Braking system is on, it may indicate that the system is unavailable. For additional information, see "Intelligent Emergency Braking" (P. 5-178).

Intelligent Emergency Braking with Pedestrian Detection system warning light (if so equipped)

This light comes on when the ignition switch is placed in the ON position. It turns off after the engine is started.

This light illuminates when the Intelligent Emergency Braking with Pedestrian Detection system is set to OFF in the vehicle information display.

If the light illuminates when the Intelligent Emergency Braking with Pedestrian Detection system is on, it may indicate that the system is unavailable. For additional information, see "Intelligent Emergency Braking with Pedestrian Detection" (P. 5-188).



Low tire pressure warning light (if so equipped)

Your vehicle is equipped with a Tire Pressure Monitoring System (TPMS) that monitors the tire pressure of all tires except the spare.

The low tire pressure warning light warns of low tire pressure or indicates that the TPMS is not functioning properly.

After the ignition switch is placed in the ON position, this light illuminates for about 1 second and turns off.

Low tire pressure warning

If the vehicle is being driven with low tire pressure, the warning light will illuminate. A "Tyre Pressure Low - Add Air" warning also appears in the vehicle information display.

When the low tire pressure warning light illuminates, you should stop and adjust the tire pressure of all four tires to the recommended COLD tire pressure shown on the tire placard located in the driver's door opening. The low tire pressure warning light does not automatically turn off when the tire pressure is adjusted. After the tire is inflated to the recommended pressure, reset the tire pressures registered in your vehicle (model with TPMS reset function) and then drive the vehicle at speeds above 25 km/h (16 mph) to activate the TPMS and turn off the low tire pressure warning light. Use a tire pressure gauge to check the tire pressure.

Model with TPMS reset function:

TPMS resetting must be also performed after a tire or a wheel is replaced, or the tires are rotated.

Depending on a change in the outside temperature, the low tire pressure warning light may illuminate even if the tire pressure has been adjusted properly. Adjust the tire pressure to the recommended COLD tire pressure again when the tires are cold, and reset the TPMS.

If the low tire pressure warning light still continues to illuminate after the resetting operation, it may indicate that the TPMS is not functioning properly. Have the system checked. It is recommended to visit a NISSAN dealer for this service.

The "Tyre Pressure Low - Add Air" warning appears each time the ignition switch is placed in the ON position as long as the low tire pressure warning light remains illuminated.

For additional information, see "Vehicle information display–7 inch (18 cm) Type A" (P. 2-24) or "Vehicle information display—12.3 inch (31 cm) Type B" (P. 2-49), "Tire Pressure Monitoring System (TPMS)" (P. 5-7) or (P. 6-3).

TPMS malfunction

If the TPMS is not functioning properly, the low tire pressure warning light will flash for approximately 1 minute when the ignition switch is placed in the ON position. The light will remain on after 1 minute. Have the system checked. It is recommended that you visit a NISSAN dealer for this service. The "Tyre Pressure Low — Add Air" warning does not appear if the low tire pressure warning light illuminates to indicate a TPMS malfunction.

For additional information, see "Tire Pressure Monitoring System (TPMS)" (P. 5-7) and "Tire pressure" (P. 8-35).

⚠ WARNING

- **Radio waves could adversely affect electric medical equipment. Those who use a pacemaker should contact the electric medical equipment manufacturer for the possible influences before use.**
- **If the light does not illuminate with the ignition switch placed in the ON position, have the vehicle checked as soon as possible. It is recommended that you visit a NISSAN dealer for this service.**
- **If the light illuminates while driving, avoid sudden steering maneuvers or abrupt braking, reduce vehicle speed, pull off the road to a safe location and stop the vehicle as soon as possible. Driving with under-inflated tires may permanently damage the tires and increase the likelihood of tire failure. Serious vehicle damage could occur and may lead to an accident and could result in serious personal injury or death. Check the tire pressure for all four tires. Adjust the tire pressure to the recommended COLD tire pressure shown on the tire placard located in the driver's door opening to turn the low tire pressure warning light off. If the light still illuminates while driving after adjusting the tire pressure, a tire may be flat or the TPMS may be malfunctioning. If you have a flat tire, replace it with a spare tire as soon as possible. If no tire is flat and all tires are properly inflated, have the vehicle checked. It is recommended that you visit a NISSAN dealer for this service.**
- **When using a wheel without the TPMS such as the spare tire, the TPMS will not function and the low tire pressure warning light will flash for approximately 1 minute. The light will remain on after 1 minute. Have your tires replaced and/or TPMS system reset as soon as possible. It is recommended that you visit a NISSAN dealer for these services.**
- **Replacing tires with those not originally specified by NISSAN could affect the proper operation of the TPMS.**

⚠ CAUTION

- **The TPMS is not a substitute for the regular tire pressure check. Be sure to check the tire pressure regularly.**
- **If the vehicle is being driven at speeds of less than 25 km/h (16 mph), the TPMS may not operate correctly.**
- **Be sure to install the specified size of tires to the four wheels correctly.**



Malfunction Indicator Light (MIL) (if so equipped)

If this indicator light comes on steady or blinks while the engine is running, it may indicate a potential emission control malfunction.

The MIL may also come on steady if the vehicle runs out of fuel. Check to make sure that the vehicle has at least 11.4 liters (3 gallons) of fuel in the fuel tank.

Operation

The MIL will come on in one of two ways:

- MIL on steady — An emission control system malfunction has been detected. Have the vehicle inspected. It is recommended that you visit a NISSAN dealer for this service. You do not need to have your vehicle towed to the dealer.
- MIL blinking — An engine misfire has been detected which may damage the emission control system. To reduce or avoid emission control system damage:
  - do not drive at speeds above 72 km/h (45 mph).
  - avoid hard acceleration or deceleration.
  - avoid steep uphill grades.
  - if possible, reduce the amount of cargo being hauled or towed.

The MIL may stop blinking and come on steady. Have the vehicle inspected. It is recommended that you visit a NISSAN dealer for this service. You do not need to have your vehicle towed to the dealer.

⚠CAUTION

Continued vehicle operation without having the emission control system checked and repaired as necessary could lead to poor driveability, reduced fuel economy, and possible damage to the emission control system.



Master warning light (if so equipped)

When the ignition is in the ON position, the master warning light illuminates if a warning message appears in the vehicle information display.

For additional information, see "Vehicle information display–7 inch (18 cm) Type A" (P. 2-24) or "Vehicle information display—12.3 inch (31 cm) Type B" (P. 2-49).



Rear Automatic Braking (RAB) system warning light (if so equipped)

This light comes on when the ignition switch is placed in the ON position. It turns off after the engine is started.

This light illuminates when the RAB system is turned off in the vehicle information display.

If the light illuminates when the RAB system is on, it may indicate that the system is unavailable. For additional information, see "Rear Automatic Braking (RAB)" (P. 5-171).



Rear fog light indicator light (if so equipped)

This light illuminates when the rear fog light is on. For additional information, see "Front and rear fog light switch" (P. 2-91).



Slip indicator light

This indicator light will blink when the Vehicle Dynamic Control (VDC) or Electronic Stability Program (ESP) system is operating, thus alerting the driver to the fact that the road surface is slippery and the vehicle is nearing its traction limits.

You may feel or hear the system working; this is normal.

The light will blink for a few seconds after the VDC or ESP system stops limiting wheel spin.

The indicator light also comes on when you place the ignition switch in the ON position. The light will turn off after approximately 2 seconds if the system is operational. If the light does not come on have the system checked. It is recommended that you visit a NISSAN dealer for this service.

Speed [120 km/h (75 mph)] warning light (if so equipped)

This light blinks when the vehicle speed goes over approximately 120 km/h (75 mph). Be sure to observe the speed limit in the area where you are driving.

Vehicle Dynamic Control (VDC) or Electronic Stability Program (ESP) OFF indicator light

This indicator light comes on when the VDC or ESP system is disabled in the vehicle information display. This indicates the VDC or ESP system has been turned off.

Enable the VDC or ESP system in the vehicle information display or restart the engine and the system will operate normally. For additional information, see "Vehicle Dynamic Control (VDC) or Electronic Stability Program (ESP) system" (P. 5-232).

The VDC or ESP OFF indicator light also comes on when you place the ignition switch in the ON position. The light will turn off after about 2 seconds if the system is operational. If the light stays on or comes on along with the indicator light while you are driving, have the VDC or ESP system checked. It is recommended that you visit a NISSAN dealer for this service.

While the VDC or ESP system is operating, you might feel a slight vibration or hear the system working when starting the vehicle or accelerating, but this is normal.

⚠WARNING

The VDC or ESP should remain on unless freeing a vehicle from mud or snow.

WARNING/INDICATOR LIGHTS (other)

For additional information on warnings and indicators, see "Vehicle information display–7 inch (18 cm) Type A" (P. 2-24) or "Vehicle information display—12.3 inch (31 cm) Type B" (P. 2-49).

Automatic brake hold indicator light (white/green) (if so equipped)

The Automatic brake hold indicator light (white) illuminates when the Automatic brake hold system is on standby.

The Automatic brake hold indicator light (green) illuminates when the Automatic brake hold system is operating.

For additional information, see "Automatic brake hold" (P. 5-29).

Front fog light indicator light (green) (if so equipped)

The front fog light indicator light illuminates when the front fog lights are on. For additional information, see "Front and rear fog light switch" (P. 2-91).

 High Beam Assist indicator light (green) (if so equipped)

This indicator light illuminates when the headlights come on while the headlight switch is in the AUTO position with the high beams selected and by pressing the button at the end of the headlight stalk with the engine running. This indicates that the high beam assist is operational.

For additional information, see "Headlight and turn signal switch" (P. 2-83).

 High beam indicator light (blue) (if so equipped)

This blue light comes on when the headlight high beams are on and goes out when the low beams are selected.

The high beam indicator light also comes on when the passing signal is activated.

 Side light and headlight indicator light (green) (if so equipped)

The side light and headlight indicator light illuminates when the side light or headlights are on (not including the Daytime Running Lights (DRL) system or signature lights). If the headlight switch is in the AUTO position, the side light and headlight indicator light will illuminate when the headlights turn on. For additional information, see "Headlight and turn signal switch" (P. 2-83).

 Turn signal/hazard indicator lights (green) (if so equipped)

The appropriate light flashes when the turn signal switch is activated.

Both lights flash when the hazard switch is turned on.

AUDIBLE REMINDERS

Brake pad wear warning

The disc brake pads have audible wear warnings. When a disc brake pad requires replacement, it makes a high pitched scraping sound when the vehicle is in motion, whether or not the brake pedal is depressed. Have the brakes checked as soon as possible if the warning sound is heard. It is recommended that you visit a NISSAN dealer for this service.

Key reminder chime (if so equipped)

A chime sounds if the driver's door is opened while the ignition switch is placed in the AUTO ACC or OFF position or placed in the OFF or LOCK position with the Intelligent Key left in the vehicle. Make sure the ignition switch is placed in the LOCK position, and take the Intelligent Key with you when leaving the vehicle.

Light reminder chime

With the ignition switch placed in the OFF position, a chime sounds when the driver's door is opened if the headlights or parking lights are on.

Turn the headlight control switch off (if so equipped) or to AUTO before leaving the vehicle.

Door lock warning chime

When the chime sounds, be sure to check both the vehicle and the Intelligent Key.

For additional information, see "Troubleshooting guide" (P. 3-19).

VEHICLE INFORMATION DISPLAY 7 INCH (18 cm) TYPE A (if so equipped)

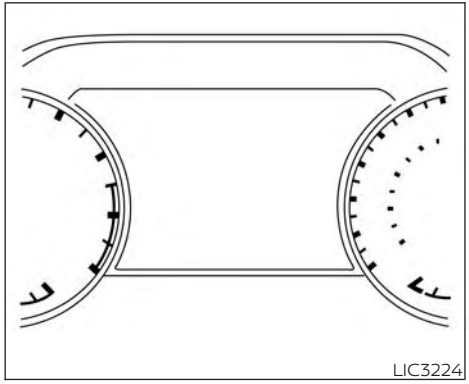
LIC3224

The vehicle information display is located to the left of the speedometer. It displays such items as:

- Vehicle settings
- Indicators and warnings
- Information/warning messages
- Tire pressure information
- Drive computer information
- Cruise control system information
- Driving Aids (if so equipped)
- ProPILOT Assist (if so equipped)
- NISSAN Intelligent Key® operation information
- Audio information
- Compass and navigation information (if so equipped)
- Shift position
- Distance to empty
- Odometer
- Clock and outside temperature

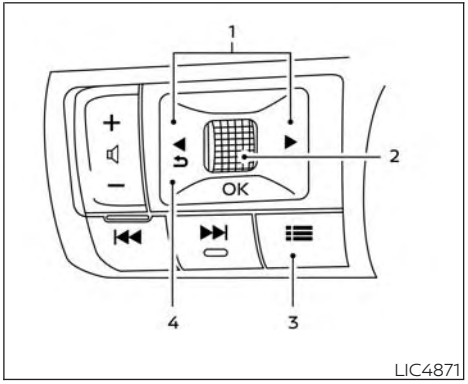

LIC4871

HOW TO USE THE VEHICLE INFORMATION DISPLAY

The vehicle information display can be navigated using the ◄ ⮌ , ► buttons and scroll dial located on the steering wheel.

1. ◄ , ► — navigate through the items in the vehicle information display.

2. Scroll dial — Use the scroll dial to navigate through the items and change or select an item in the vehicle information display. The scroll dial allows up or down navigation and press to select.
3. Short cut menu button— Press this button to open a shortcut menu.
4. ⮌ — go back to the previous menu

STARTUP DISPLAY

When the vehicle in placed in the ON position the screens that display in the vehicle information include:

- Active system status (if so equipped)
- Trip computer
- Fuel economy
- Distance to empty
- Tire pressure information
- Intelligent 4x4 (if so equipped)
- Navigation (if so equipped)
- Audio
- Warnings

Warnings will only display if there are any present. For additional information on warnings and indicators see "Vehicle information display warnings and indicators" (P. 2-40).

To control what items display in the vehicle information display, see "Customize Display or Display Settings" (P. 2-37).

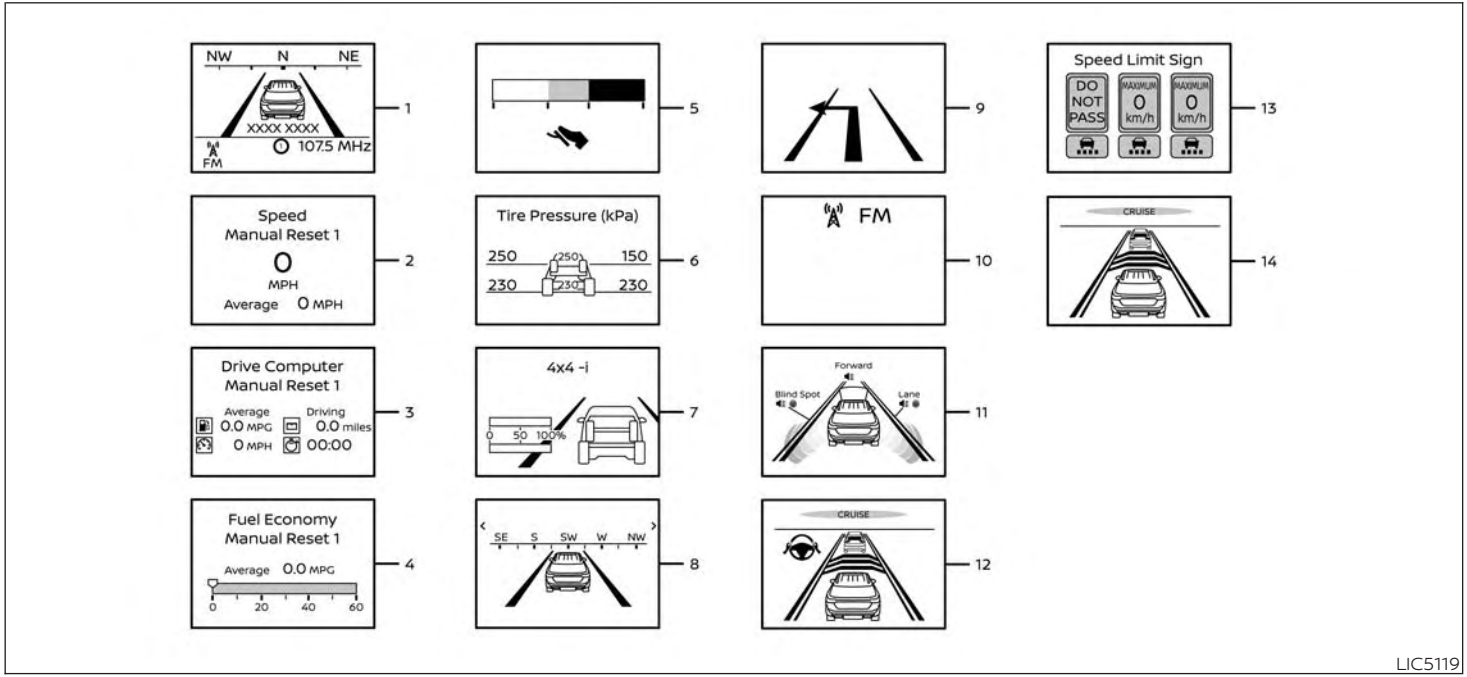

LIC5119

TRIP COMPUTER

1. Home

The Home mode shows the following information:

- Vehicle speed
- Navigation (if so equipped)
- Audio

The Home display will switch to the Audio display by pressing the OK button.

2. Speed and Average speed (if so equipped)

The Speed and Average speed mode shows the current vehicle speed and the average vehicle speed since the last reset. The Speed and Average speed mode has three modes of operation. You can switch between Manual Reset1, Manual Reset2 or Auto Refuel by pushing the scroll dial.

Manual Reset1 can be reset manually by using the scroll dial.

Manual Reset2 can be reset manually by using the scroll dial or will be reset automatically each time the ignition switch is placed in the OFF position (if so equipped).

Auto Refuel will be reset automatically each time when refueling.

3. Drive Computer

Average fuel consumption:

The average fuel consumption shows the average fuel consumption since the last reset.

Average speed:

The average speed shows the average vehicle speed since the last reset.

Trip odometer:

The trip odometer shows the total distance the vehicle has been driven since the last reset.

Elapsed time:

The elapsed time shows the time since the last reset.

The Drive computer mode has three modes of operation. You can switch between Manual Reset1, Manual Reset2 or Auto Refuel by pushing the scroll dial.

Manual Reset1 can be reset manually by using the scroll dial.

Manual Reset2 can be reset manually by using the scroll dial or will be reset automatically each time the ignition switch is placed in the OFF position (if so equipped).

Auto Refuel will be reset automatically each time when refueling.

4. Fuel economy display

Current fuel consumption:

The Fuel economy display mode shows the current fuel consumption.

Average fuel consumption:

The Fuel economy display mode shows the average fuel consumption since the last reset.

The Fuel economy display mode has three modes of operation. You can switch between Manual Reset1, Manual Reset2 or Auto Refuel by pushing the scroll dial.

Manual Reset1 can be reset manually by using the scroll dial.

Manual Reset2 can be reset manually by using the scroll dial or will be reset automatically each time the ignition switch is placed in the OFF position (if so equipped).

Auto Refuel will be reset automatically each time when refueling.

5. Eco Pedal Guide (if so equipped)

When the ECO mode is selected, you can view ECO Pedal Guide function for improving fuel economy.

The ECO Pedal Guide mode has three modes of operation. You can switch between Manual Reset1, Manual Reset2 or Auto Refuel by pushing the scroll dial.

Manual Reset1 can be reset manually by using the scroll dial.

Manual Reset2 can be reset manually by using the scroll dial or will be reset automatically each time the ignition switch is placed in the OFF position (if so equipped).

Auto Refuel will be reset automatically each time when refueling.

For additional information, see "ECO Mode" (P. 5-34).

6. Tire Pressures

The tire pressure mode shows the pressure of all four tires while the vehicle is driven.

With the "Tire Pres ECO advice" function ON, when the tire pressure is getting low, "Check Tire Pressures for Best Fuel Economy" or "Add air for Best Fuel Economy" appears. For additional information, see "ECO Mode Setting" (P. 2-60) or "Tire Pres ECO advice" (P. 5-35).

When the "Tire Pressure Low — Add Air" warning appears, the display can be switched to the tire pressure mode by pushing the scroll dial to reveal additional details on the displayed warning.

7. Intelligent 4x4 torque distribution display (if so equipped)

When the Intelligent 4x4 torque distribution display is selected, you can view the distribution ratio of the transmission torque to the front and rear wheels during driving.

8. Compass (if so equipped)

This display indicates the direction the vehicle is heading.

9. Navigation (if so equipped)

When the route guidance is set in the navigation system, this item shows the navigation route information.

10. Audio

The audio mode shows the status of audio information.

11. Driver Assistance

The Driver Assistance mode shows the operating condition for the following systems:

- Forward
  - Intelligent Emergency Braking with Pedestrian Detection system
  - Intelligent Emergency Braking system
  - Intelligent Forward Collision Warning
- Lane:
  - Lane Departure Warning (LDW)
  - Intelligent Lane Intervention
- Blind Spot:
  - Blind Spot Warning (BSW)
  - Intelligent Blind Spot Intervention (if so equipped)

For additional information, see "Intelligent Blind Spot Intervention" (P. 5-76), "Blind Spot Warning (BSW)" (P. 5-64), "Lane Departure Warning (LDW)" (P. 5-39), "Intelligent Emergency Braking with Pedestrian Detection" (P. 5-188), "Intelligent Emergency Braking" (P. 5-178), "Intelligent Forward Collision Warning" (P. 5-202) or "Intelligent Lane Intervention" (P. 5-46).

12. ProPILOT Assist (if so equipped)

The ProPILOT Assist mode shows operating conditions for the following systems:

- Intelligent Cruise Control (ICC)
- Steering Assist

The display will also be shown when the ProPILOT Assist is turned on. For additional information, see "ProPILOT/ProPILOT Assist" (P. 5-133).

13. Traffic Sign Recognition (if so equipped)

The Traffic Sign Recognition (TSR) system provides the driver with information about the most recently detected speed limit.

For additional information, see "Traffic Sign Recognition (TSR) (P. 5-36).

14. Intelligent Cruise Control (ICC) (if so equipped)

The ICC mode shows operating conditions for the following system:

- Intelligent Cruise Control (ICC)

The display will also be shown when the ICC system is turned on. For additional information, see "Intelligent Cruise Control (ICC)" (P. 5-105).

OIL CONTROL SYSTEM (if so equipped)

The oil control system can be accessed in the Maintenance portion of the vehicle information display settings.

Engine oil information informs the distance to oil change. Never exceed one year or 10,000 km (6,250 miles) between oil change intervals for the 3.5L 6 cylinder (VQ35DD engine model).

Display when ignition is ON	Display timing	Action Required
Engine Oil Service due in xxx miles	Remaining oil life is less than 1500 km (940 miles).	Plan to have your vehicle serviced.
Engine Oil Service due	Remaining oil life is 0 km (0 miles).	Have your vehicle serviced within two weeks or less than 800 km (500 miles).

The oil change interval cannot be adjusted manually.

The distance to oil change interval is calculated depending on the driving conditions and set automatically by the oil control system. A reminder will be displayed when approaching the end of the service interval.

When the Factory Reset option is selected in the vehicle information display, the oil control system will also be reset to initial value. Please change the engine oil when Factory Reset is selected.

⚠ CAUTION

If the oil replacement indicator is displayed, change the engine oil within two weeks or less than 800 km (500 miles).

Operating the vehicle with deteriorated oil can damage the engine.

To reset oil control system:

1. Place the ignition switch in the ON position.
2. Push the ◄ and ► buttons located on the steering wheel until "Settings" displays in the vehicle information display. Use the scroll dial to select "Maintenance". Then, press the scroll dial.

3. Select the "Oil Control System" and press the scroll dial.
4. Press the scroll dial according to the reset instructions displayed at the bottom of the "Oil Control System" maintenance screen.

For additional information, see "Maintenance" (P. 2-36).

SETTINGS

The setting mode allows you to change the information displayed in the vehicle information display:

- VDC or ESP Setting
- Driver Assistance
- ECO Mode Setting or ECO Settings
- TPMS Setting or TPMS Settings
- Clock
- Vehicle Settings
- Maintenance
- Customize Display or Display Settings
- Unit/Language
- Key-Linked Settings or I-Key Link (if so equipped)
- Factory Reset

VDC or ESP Setting

The VDC or ESP Setting menu allows the user to enable or disable the Vehicle Dynamic Control (VDC) system or Electronic Stability Program (ESP) system.

Some menu items shown below may not be equipped on your vehicle.

Menu item	Explanation
System	Allows the user to turn the VDC or ESP system on or off. For additional information, see "Vehicle Dynamic Control (VDC) or Electronic Stability Program (ESP) system" (P. 5-232).

Driver Assistance

The driver assistance menu allows the user to change the various driving aids, parking aids and braking features.

Some menu items shown below may not be equipped on your vehicle.

Menu item		Explanation
Steering Assist		Allows user to turn the Steering Assist of the ProPILOT Assist system on or off. For additional information, see "ProPILOT Assist" (P. 5-133).
Lane Assist or Lane		Displays available lane options.
	Warning	Allows user to turn the Lane Departure Warning (LDW) system on or off. For additional information, see "Lane Departure Warning (LDW)" (P. 5-39).
	Intervention	Allows user to turn Intelligent Lane Intervention system on or off. For additional information, see "Intelligent Lane Intervention" (P. 5-46).
	Emergency Lane Assist	Allows user to turn the Emergency Lane Assist system on or off. For additional information, see "Emergency Lane Assist (ELA) (P. 5-54).
	Lane Sensitivity	Allows user to set the system sensitivity to Strong, Normal or Mild.
Blind Spot Assist or Blind Spot		Displays available blind spot options.
	Warning	Allows user to turn the Blind Spot Warning (BSW) system on or off. For additional information, see "Blind Spot Warning (BSW)" (P. 5-64).
	Intervention	Allows user to turn the Intelligent Blind Spot Intervention system on or off. For additional information, see "Intelligent Blind Spot Intervention " (P. 5-76).
Emergency Brake		Displays available emergency brake options.
	Front	Allows user to turn the front emergency braking system on or off. For additional information, see "Intelligent Emergency Braking with Pedestrian Detection" (P. 5-188), "Intelligent Emergency Braking" (P. 5-178) and "Intelligent Forward Collision Warning" (P. 5-202).
	Rear	Allows user to turn the rear emergency braking system on or off. For additional information, see "Rear Automatic Braking (RAB)" (P. 5-171).

Menu item		Explanation
Speed Limit Sign or Traffic Sign		Allows user to turn the Speed Limit Sign on or off. For additional information, see "Traffic Sign Recognition (TSR)" (P. 5-36).
Spd.Limit Assist or Speed Limit Link		Allows user to turn the speed limit assist ON or OFF.
Speed Link Offset		Allows user to set whether the speed limit used by [Speed Limit Link] should be accepted exactly, or with a tolerance of –10 km/h (–5 mph) to +10 km/h (+5 mph) adjust.
Parking Aids		Displays available parking aids.
	Moving Object	Allows user to turn the Moving Object Detection (MOD) on or off. For additional information, see "Moving Object Detection (MOD)" (P. 4-26).
	Auto Show Sonar or Display	Allows user to auto display the sonar. For additional information, see "Front and rear sonar system" (P. 5-237).
	Front Sonar or Front	Allows user to turn the front sonar on or off.
	Rear Sonar or Rear	Allows user to turn the rear sonar on or off.
	Sonar Distance or Distance	Allows user to set the distance sensor range to Long/Medium/Short.
	Sonar Volume or Volume	Allows the user to set the parking sensor volume to High/Medium/Low.
Rear Cross Traffic Alert		Allows user to turn the Rear Cross Traffic Alert (RCTA) system on or off. For additional information, see "Rear Cross Traffic Alert (RCTA)" (P. 5-90).
Driver Alertness or Driver Attention Alert		Allows user to turn the Intelligent Driver Alertness on or off. For additional information, see "Intelligent Driver Alertness" (P. 5-217).
Timer Alert		Allows user to set the timer alert.
Low Temp. Alert		Allows user to turn the low temperature alert on or off.

ECO Mode Setting or ECO Settings

The ECO mode setting menu allows the user to change the settings for the ECO mode.

Some menu items shown below may not be equipped on your vehicle.

Menu item		Explanation
ECO Customize or ECO Drive Mode		Displays available ECO mode settings.
	Cruise Control	Allows user to turn the Cruise Control mode on or off. For additional information, see “Cruise Control” (P. 5-103).
	Air Conditioning	Allows user to turn the Air Conditioning mode on or off. For additional information, see “ECO Customize” (P. 5-34).
ECO Drive Assist or ECO Info Settings		Displays available ECO information settings.
	ECO Indicator	Allows user to turn the ECO indicator on or off.
	ECO Drive Report	Allows user to turn the ECO Drive Report on or off.
View History		Displays the history report for the vehicle.
Tire Pres ECO advice or Tyre Pres ECO advice or Tyre ECO advice		Allows user to turn the tire pressure ECO advice on or off.

TPMS Setting or TPMS Settings

The TPMS settings menu allows the user to view or change the tire pressure units displayed in the vehicle information display.

Some menu items shown below may not be equipped on your vehicle.

Menu item	Explanation
Target front	Allows user to view the front tire pressures.
Target rear	Allows user to view the rear tire pressures.
Tire Pressure Unit or Tyre Pressure Unit	Allows user to select the tire pressure units that will display in the vehicle information display.
TPMS reset or Calibrate	Allows user to cancel or confirm the request.

Clock

Allows user to adjust the clock settings and time within the vehicle information display.

Some menu items shown below may not be equipped on your vehicle.

Menu item	Explanation
Clock Mode	Allows user to adjust the clock mode to Auto, Manual or Time Zone.
Clock Format	Allows user to adjust the clock format to 24H or 12H.
Daylight Saving	Allows user to turn on or off the daylight saving mode.
Display	Allows user to turn on or off the clock display.
Time Zone	Allows user to select a time zone.
Set Clock Manually	Allows user to set the clock manually.

Vehicle Settings

The vehicle settings menu allows the user to change the settings for lights, wipers, locking, keys, and other vehicle settings.

Some menu items shown below may not be equipped on your vehicle.

Menu item		Explanation
Power Back Door		Allows user to turn the power back door on or off.
Lighting		Displays the available lighting options.
	Welcome Headlight or Welcome Light	Allows user to turn the welcome headlight on or off.
	Auto Room Lamp	Allows user to turn the auto room lamp on or off.
	Accent Lighting or Mood Lighting	Allows user to adjust the accent lighting.
	Light Sensitivity or Auto Headlight	Allows user to change when the lights illuminate based on the brightness outside the vehicle.
	Light Off Delay	Allows user to change the duration of time that the automatic headlights stay on after the vehicle is shut off.

Menu item		Explanation
Locking		Displays the available locking options.
	Ext. Door Switch or I-Key Door Lock	Allows user to turn the exit door switch on or off.
	Selective Unlock	Allows user to turn the selective unlock feature on or off. When this item is turned on (default), only the driver's door is unlocked after the driver's door unlock operation. All the doors can be unlocked if the capacitive touch pad is pressed within 5 seconds of the door handle capacitive unlock feature. When this feature is turned off, all the doors unlock when the driver's door unlock operation is performed once.
	Auto Door Unlock	Allows the user to set the auto door unlock to Shift to P or Shift to Park, IGN OFF and OFF.
	Horn beeps on lock	Allows the user to turn the horn beeps on lock feature on or off.
	Walk Away Lock	Allows the user to turn the walk away lock function ON or OFF. For additional information, see "Walk away lock function" (P. 3-18).
	Approach Unlock	Allows the user to turn the approach unlock function ON or OFF. For additional information, see "Approach unlock function" (P. 3-18).
Wipers		Displays the available wiper options.
	Speed Dependent	Allows user to turn the speed dependent wipers on or off.
	Rain Sensor or Auto Wipe	Allows user to turn the rain sensor wipers on or off.
	Reverse Link	Allows user to turn the reverse link feature on or off.
Driving Position		Displays the available driving position options.
	Exit Seat Slide	When the exit seat slide is on the driver's seat will move backward for easy exit when the ignition switch is placed in the OFF position and the driver's door is opened. After getting into the vehicle and placing the ignition switch in the ON position, the driver's seat will move to the previous set position. For additional information, see "Memory seat" (P. 3-47).
	Exit Steering Up	When the exit steering up feature is turned on, the steering wheel moves upward for easy exit when the ignition switch is in the OFF position and the driver's door is opened. After getting into the vehicle and placing the ignition switch in the ON position, the steering wheel moves to the previous position. For additional information, see "Memory seat" (P. 3-47).
Rear Door Alert		Displays the available Rear Door Alert options.
	Horn & Alert	When selected, the alert is displayed; and the horn sounds.
	Alert Only	When selected, only the alert is displayed.
	OFF	When selected, no alert or horn will be active.

Maintenance

The maintenance menu allows the user to set reminders for various vehicle maintenance items.

Some menu items shown below may not be equipped on your vehicle.

⚠ WARNING

The tire replacement indicator is not a substitute for regular tire checks, including tire pressure checks. For additional information, see "Changing wheels and tires" (P. 8-40). Many factors including tire inflation, alignment, driving habits and road conditions affect tire wear and when tires should be replaced. Setting the tire replacement indicator for a certain driving distance does not mean your tires will last that long. Use the tire replacement indicator as a guide only and always perform regular tire checks. Failure to perform regular tire checks, including tire pressure checks could result in tire failure. Serious vehicle damage could occur and may lead to a collision, which could result in serious personal injury or death.

Menu item	Explanation
Service	Allows user to reset the current interval. This should only be done after completing oil change maintenance.
Air Filter	Allows user to set a reminder at a specific interval or reset the current one.
Tire or Tyre	This indicator appears when the customer set distance is reached for replacing tires. You can set or reset the distance for replacing tires.
Other	This indicator appears when the customer set distance is reached for checking or replacing maintenance items other than the engine oil, oil filter and tires. Other maintenance items can include such things as air filter or tire rotation. The distance for checking or replacing the items can be set or reset.

Customize Display or Display Settings

The customize display menu allows the user to customize the information that appears in the vehicle information display.

Some menu items shown below may not be equipped on your vehicle.

Menu item		Explanation
Main Menu Selection or Contents Selection		Displays the available screens that can be shown in the vehicle information display.
	Home	Allows user to turn the home screen on or off in the vehicle information display.
	Blank	Allows user to turn the blank on or off in the vehicle information display.
	Speed	Allows user to turn the speed screen on or off in the vehicle information display.
	Drive Computer	Allows user to turn the drive computer screen on or off in the vehicle information display.
	Fuel Economy	Allows user to turn the fuel economy screen on or off in the vehicle information display.
	ECO Pedal Guide	Allows user to turn the ECO Pedal guide screen on or off in the vehicle information display.
	TPMS	Allows user to turn the TPMS screen on or off in the vehicle information display.
	4x4–I	Allows user to turn the 4x4–I screen on or off in the vehicle information display.
	Navigation	Allows user to turn the navigation screen on or off in the vehicle information display.
	Audio	Allows user to turn the audio controls screen on or off in the vehicle information display.
	Driving Aids	Allows user to turn the driving aids screen on or off in the vehicle information display.
	Cruise	Allows user to turn the cruise control screen on or off in the vehicle information display.
	Speed Limit Sign	Allows user to turn the speed limit sign screen on or off in the vehicle information display.
Route Guidance		Displays the available route guidance settings.
	Alerts or Alert(s)	Allows user to turn the alerts on or off.
Transition (Cruise) or Auto Cruise Display		Allows user to turn the transition (cruise) on or off.
Welcome Effect		Displays the available welcome effect settings.
	Gauges	Allows user to turn the gauges effect on or off.
	Animation	Allows user to turn the animation effect on or off.

Menu item			Explanation
Operation guidance			Displays the available operation guidance settings.
	Lights		Allows user to turn the light mode guidance on or off.
	Wiper		Displays the available wiper settings.
		Front or FRONT	Allows user to turn the front wiper guidance on or off.
		Rear or REAR	Allows user to turn the rear wiper guidance on or off.
	High Beam Assist or High beam Assist		Allows user to turn the High Beam Assist on or off.
	Seat Memory		Allows user to turn the seat memory on or off.
	Cruise Control		Allows user to turn the cruise control on or off.

Unit/Language

The unit/language menu allows the user to change the units shown in the vehicle information display.

Some menu items shown below may not be equipped on your vehicle.

Menu item	Explanation
Mileage/Fuel or Distance/Fuel	Displays the available mileage/fuel display units and allows user to select preferred unit for display.
Tire Pressure or Tyre Pressures	Allows user to select the tire pressure display units.
Temperature	Allows user to select the temperature display units.
Language	Displays the available language options and allows user to select preferred language for display.

Key-Linked Settings or I-Key Link (if so equipped)

Some menu items shown below may not be equipped on your vehicle.

Menu item	Explanation
Key-Linked Settings or I-Key Link	Allows user to turn the Key-Linked settings on or off. This setting is enabled individually by each key. When enabled, various settings in the vehicle information display and the driver position (if equipped) will return to the same settings as the last time the linked key was used. When disabled for a key, no settings will be automatically changed when that key is used. For additional information, see “Memory storage function” (P. 3-48).

Factory Reset

The factory reset menu allows the user to restore the vehicle information display settings to factory status.

Some menu items shown below may not be equipped on your vehicle.

Menu item	Explanation
Factory Reset	Allows user to reset the vehicle information display settings to the original factory settings. Once selected, the user can confirm or cancel the reset.

VEHICLE INFORMATION DISPLAY WARNINGS AND INDICATORS

The following messages may appear in your vehicle information display.



Engine start operation for Intelligent Key system (if I-Key battery level is low)

This indicator appears when the battery of the Intelligent Key is low and when the Intelligent Key system and the vehicle are not communicating normally.

If this appears, touch the ignition switch with the Intelligent Key while depressing the brake pedal. For additional information, see "NISSAN Intelligent Key® battery discharge" (P. 5-17).



Key ID Incorrect

This warning appears when the ignition switch is placed from the OFF position and the Intelligent Key is not recognized by the system. You cannot start the engine with an unregistered key.

For additional information, see "NISSAN Intelligent Key®" (P. 3-7).



I-Key System Error: See Owner's Manual

After the ignition switch is placed in the ON position, this warning appears for a period of time and then turns off.

The Key System Error message warns of a malfunction with the Intelligent Key system. If the warning appears while the engine is stopped, it may be impossible to start the engine.

If the warning appears while the engine is running, you can drive the vehicle. However, in these cases, have the system checked. It is recommended that you visit a NISSAN dealer for this service.



Key Battery Low

This indicator appears when the Intelligent Key battery is running out of power.

If this indicator appears, replace the battery with a new one. For additional information, see "Battery replacement" (P. 8-30).



No Key Detected

This warning appears when the Intelligent Key is left outside the vehicle with the ignition switch in the ON position. Make sure the Intelligent Key is inside the vehicle.

For additional information, see "NISSAN Intelligent Key®" (P. 3-7).



Brightness indicator

This indicator shows the brightness adjustment of the instrument panel. For additional information, see "Instrument brightness control" (P. 2-90).

Check Rear Seat For All Articles or Reminder Check Rear Seat

When the system is enabled, this message appears when the vehicle comes to a complete stop and the vehicle is transitioned from the D (Drive) position to the P (Park) position (when the "alert only" setting is enabled). This message appears when the vehicle comes to a complete stop, the vehicle is transitioned from the D (Drive) position to the P (Park) position and the driver exits the vehicle (when the "alert and horn" setting is enabled). This message alerts the driver, after a period of time, to check for items in the rear seat after the audible alert has been provided.

NOTE:

This system is disabled until a driver enables it using the vehicle information display. For additional information, see "How to use the vehicle information display" (P. 2-24).

For additional information, see "Rear Door Alert" (P. 2-104).

Rear Door Alert is activated

When the system is enabled, this message appears when the Rear Door Alert system is active and can remind the driver to check the back seat.

- Using the steering wheel switch, a driver can select "Dismiss Message" to clear the display for a period of time. If no selection is made, this message automatically turns off after a period of time.
- Using the steering wheel switch, a driver can select "Disable Alert" to disable the horn alert for the remainder of the current trip.

⚠WARNING

Selecting "Dismiss Message" during a stop within a trip temporarily dismisses the message for that stop without turning the system off. Alerts can be provided for other stops during the trip. Selecting "Disable Alert" turns off the Rear Door Alert system for the remainder of a trip and no audible alert will be provided.

NOTE:

This system is disabled until a driver enables it using the vehicle information display. For additional information, see "How to use the vehicle information display" (P. 2-24).

For additional information, see "Rear Door Alert" (P. 2-104).



Caution Steep slope

This indicator appears, and a chime sounds when the Automatic brake hold function is activated while the vehicle is on a steep hill. Apply the foot brake to stop the vehicle moving. For additional information, see "Automatic brake hold" (P. 5-29).

Chassis Control System Error See Owner's Manual or Chassis control system fault: See Owner's Manual

This warning appears if the chassis control module detects a malfunction in the chassis control system. Have the system checked. It is recommended that you visit a NISSAN dealer for this service. For additional information, see "Chassis Control" (P. 5-235).



Door/Liftgate Open

This warning appears when a door or the liftgate has been opened.

Drive Mode Selector indicator

When a driving mode is selected using the Drive Mode Selector, the selected mode indicator is displayed.

- SAND (4WD models)
- MUD/RUT (4WD models)
- SNOW
- AUTO (4WD models)
- ECO
- SPORT
- STANDARD (2WD models)
- TOW

For additional information, see "Drive Mode Selector" (P. 5-32).

Headlight System Error: See Owner's Manual or Headlight system fault: See Owner's Manual

This warning appears when there is an error with the system. For additional information, see "Headlight and turn signal switch" (P. 2-83).



Low Fuel

This warning appears when the fuel level in the fuel tank is getting low. Refuel as soon as it is convenient, preferably before the fuel gauge reaches 0 (Empty). **There will be a small reserve of fuel in the tank when the fuel gauge needle reaches 0 (Empty).**



Low Oil Pressure: See Owner's Manual

This warning appears in the message area of the vehicle information display if low oil pressure is detected. This gauge is not designed to indicate low oil level. **The low oil pressure warning is not designed to indicate a low oil level.** Use the dipstick to check the oil level. For additional information, see "Engine oil" (P. 8-11).



Low Outside Temperature

This warning appears if the outside temperature is below 3°C (37°F). The temperature can be changed to display in Celsius or Fahrenheit. For additional information, see "Settings" (P. 2-30).



Low Washer Fluid

This warning appears when the windshield-washer fluid is at a low level. Add windshield-washer fluid as necessary. For additional information, see "Windshield-washer fluid" (P. 8-16).

Neutral Hold Mode activated

This message appears when the Neutral hold mode is activated. To exit the Neutral hold mode, place the vehicle in any other shift position other than N (Neutral). For additional information, see "Neutral hold mode function" (P. 5-25).

Neutral Hold Mode was not activated

This message appears when the Neutral hold mode is unavailable. To activate the Neutral hold mode, wait for a while without shifting and then perform the operations again. For additional information, see "Neutral hold mode function" (P. 5-25).

Neutral Hold Mode guidance

This message appears after approximately 5 seconds when the ignition switch is placed in the OFF position while the shift position is in the N (Neutral) position (Neutral hold mode is available). For additional information, see "Neutral hold mode function" (P. 5-25).



Parking Aids

This indicator appears when the sensor is activated. For additional information, see "Front and rear sonar system" (P. 5-237).

Parking Sensor Error: See Owner's Manual or Parking sensor system fault: See Owner's Manual

This warning appears when there is an error with the system. For additional information, see "Front and rear sonar system" (P. 5-237).

Power will turn off to save the battery

Under the specific conditions, this warning may appear in the vehicle information display after a period of time if the ignition switch is in the ON position and if the vehicle is in P (Park). For additional information, see "Push-button ignition switch positions" (P. 5-16).

Power turned off to save the battery

Under the specific conditions, this warning may appear after the ignition switch is automatically turned off. For additional information, see "Push-button ignition switch positions" (P. 5-16).



Press brake to operate switch

This indicator appears if the Automatic brake hold switch is pushed without depressing the brake pedal while the Automatic brake hold function is activated. Depress the brake pedal and push the switch to deactivate the Automatic brake hold function.

For additional information, see "Automatic brake hold" (P. 5-29).



Press brake pedal to prevent rolling

This warning appears in the following situation:

- This warning appears and chime sounds if the vehicle moves while the Automatic brake hold function is activated. Apply the foot brake to stop the vehicle moving.



Push brake and start switch to drive

This indicator appears when the shift position is in the P (Park) position.

This indicator also appears when the vehicle has been started using the Remote Engine Start (if so equipped) function.

This indicator means that the engine will start by pushing the ignition switch with the brake pedal depressed. You can start the engine from any position of the ignition switch.



Rear seat belt warning

- This warning includes display of the seat belts for rear positions only. Rear seat belts that are unfastened will appear red.
- If any rear seat belts are unfastened when the ignition switch is pushed to the ON position, this warning will display for about one minute, or until dismissed.
- When a rear seat belt is changed from fastened to unfastened, this warning will display for over one minute, or until dismissed, and the seat belt warning light will turn on.
- If the vehicle is driven above 15 km/h (9 mph) during or after the status change, this warning will display, the seat belt warning light will blink, and the chime will sound for over one minute. During this time, the warning and chime cannot be dismissed unless the rear seat belt is fastened again. Once the seat belt warning light and chime have turned off, the display will remain until dismissed.

NOTE:

- **While it appears, this message will also display the status of all doors and rear hatch.**
- **Opening and closing a rear door while stopped will reset this warning, similar to pushing the ignition switch to ON again.**

Release Parking Brake

This warning appears when the accelerator pedal is depressed when the electronic parking brake automatic release function cannot be used. Release the electronic parking brake manually.



Reminder: Turn OFF Headlights

This warning appears when the headlights are left in the ON position when exiting the vehicle. Place the headlight switch in the OFF or AUTO position. For additional information, see "Headlight and turn signal switch" (P. 2-83).

Shipping Mode On Push Storage Fuse

This warning may appear if the extended storage switch is not pushed in. When this warning appears, push in the extended storage switch to turn off the warning. For additional information, see "Extended storage switch" (P. 2-110).



Steep Slope Apply foot brake

This indicator appears, and chime sounds if the "Caution Steep slope" indicator has appeared over about 3 minutes. Then the parking brake will automatically be applied and the brake force of the Automatic brake hold will be released, and the vehicle may move or roll away unexpectedly. Apply the foot brake to stop the vehicle moving.

For additional information, see "Automatic brake hold" (P. 5-29).



Time for a break?

This indicator appears when the set time is reached. The time can be set up to six hours. For additional information, see "Settings" (P. 2-30).

Tire Pressure Low - Add Air or Low Tyre Pressure

This warning appears when the low tire pressure warning light in the meter illuminates and low tire pressure is detected. The warning appears each time the ignition switch is placed in the ON position as long as the low tire pressure warning light remains illuminated. If this warning appears, stop the vehicle and adjust the tire pressures of all four tires to the recommended COLD tire pressure shown on the tire placard. For additional information, see "Low tire pressure warning light" (P. 2-19) and "Tire Pressure Monitoring System (TPMS)" (P. 5-7).

TPMS Error: See Owner's Manual

This warning appears when there is an error with your TPMS. If this warning appears, have the system checked. It is recommended that you visit a NISSAN dealer for this service.



Transmission Shift Position indicator

This indicator shows the transmission shift position.



When parked apply parking brake

This message appears when a malfunction occurs in the electric shift control system below 10 km/h (6 mph).

Have the system checked. It is recommended that you visit a NISSAN dealer for this service.

4WD Error: See Owner's Manual or 4WD System Fault See Owner's Manual

This warning appears when the 4-Wheel Drive (4WD) system is not functioning properly while the engine is running. Reduce vehicle speed and have your vehicle checked by a NISSAN dealer as soon as possible. For additional information, see "Intelligent 4x4" (P. 5-222).

4WD High Temp. Stop Vehicle

This warning appears when the oil temperature of the powertrain parts will increase due to the difference in rotation between the front and rear wheels is large

(wheel slip), such as when driving the vehicle on rough roads, through sand or mud, or freeing a stuck vehicle. If this warning is displayed, stop the vehicle with the engine idling, as soon as it is safe to do so. In these cases, the 4WD changes to 2WD to protect the powertrain parts. Then if the warning turns off, you can continue 4WD driving.

Tire Size Incorrect See Owner's Manual or Tyre Size Incorrect See Owner's Manual

This warning may appear if there is a large difference between the diameters of the front and rear wheels. Pull off the road in a safe area, with the engine idling. Check that all the tire sizes, brand, construction and tread patterns are the same, that the tire pressure is correct and that the tires are not excessively worn. If you have any problems, please change tires or adjust to the correct tire pressure. Do not select the SNOW or SAND or MUD/RUT (if so equipped) mode with the Drive Mode Selector and do not drive fast. For additional information, see "Intelligent 4x4" (P. 5-222).



Blind Spot Warning (BSW) indicator

This indicator appears when the BSW system is available.

For additional information, see "Blind Spot Warning (BSW)" (P. 5-64).



Cruise control indicator

This indicator shows the cruise control system status.

When cruise control is activated, a green circle will illuminate to indicate it is set. The vehicle information display will also display the speed the cruise control was set at. If you accelerate past the set speed, the speed will blink until you either cancel cruise control or go back to the set speed. If cruise control is on and canceled, the speed will be displayed to show the speed the vehicle will return to if the resume button is activated.

Currently not available

This message may appear when the ProPILOT Assist system, Intelligent Blind Spot Intervention, Intelligent Cruise Control or the Intelligent Lane Intervention system is engaged.

Under the following conditions, the ProPILOT Assist, Intelligent Blind Spot Intervention, Intelligent Cruise Control or the Intelligent Lane Intervention system is automatically canceled:

- When the VDC or ESP system is turned off

The above system cannot be used in some situations (VDC or ESP operates, wheel slip and VDC or ESP system is off.)



Driver Attention Alert Malfunction or Driver Attention Alert System Fault

This warning appears when the Intelligent Driver Alertness system is not functioning properly. For additional information, see "Intelligent Driver Alertness" (P. 5-217).



Driver Attention Alert— Take a Break?

This alert appears when the system has detected that the driver may be displaying fatigue or a lack of attention.



Emergency Lane Assist (ELA) OFF indicator

For details about the Emergency Lane Assist (ELA) system, see "Emergency Lane Assist (ELA)" (P. 5-54).

Forward Driving Aids Temporarily Disabled Front Sensor Blocked See Owner's Manual or Temporarily Disabled Front Radar Blocked

This message appears when the front radar sensor may be obstructed due to:

- mud, dirt, snow, ice, etc.
- inclement weather (rain, fog, snow, etc.).

All forward driving aids are temporarily disabled until the system detects that the front radar sensor is no longer obstructed.

For additional information, see:

- Intelligent Emergency Braking with Pedestrian Detection (P. 5-188)
- Intelligent Emergency Braking (P. 5-178)
- ProPILOT/ProPILOT Assist (P. 5-133)
- Intelligent Forward Collision Warning (P. 5-202)
- Intelligent Cruise Control (ICC) (P. 5-105)
- Emergency Lane Assist (ELA) (P. 5-54)



Intelligent Emergency Braking emergency warning indicator

This indicator appears along, with an audible warning, when the system detects the possibility of a forward collision.

For additional information, see "Intelligent Emergency Braking" (P. 5-178).



Intelligent Emergency Braking with Pedestrian Detection emergency warning indicator

This indicator appears along, with an audible warning, when the system detects the possibility of a forward collision.

For additional information, see "Intelligent Emergency Braking with Pedestrian Detection" (P. 5-188).



Intelligent Cruise Control (ICC) indicators

These indicators show the ICC system status. The status is shown by color. For additional information, see " Intelligent Cruise Control (ICC)" (P. 5-105).



Intelligent Lane Intervention/Intelligent Blind Spot Intervention/ ProPILOT Assist indicator

This indicator shows when the Intelligent Lane Intervention, Intelligent Blind Spot Intervention, or ProPilot Assist system is engaged.

For additional information, see "Intelligent Lane Intervention" (P. 5-46), "Intelligent Blind Spot Intervention" (P. 5-76), or "ProPILOT Assist" (P. 5-133).



Lane Departure Warning (LDW) indicator

This indicator appears when the LDW system is engaged.

For additional information, see "Lane Departure Warning (LDW)" (P. 5-39).



Lane Departure Warning (LDW)/Intelligent Lane Intervention (I-LI)/ Emergency Lane Assist (ELA) indicator

For details about the Lane Departure Warning (LDW) and Intelligent Lane Intervention (I-LI) systems, see "Lane Departure Warning (LDW)" (P. 5-39) or "Intelligent Lane Intervention (I-LI)" (P. 5-46).

For details about the Emergency Lane Assist (ELA) system, see "Emergency Lane Assist (ELA)" (P. 5-54).

Malfunction: See Owner's Manual or System fault: See Owner's Manual

This warning appears when one or more of the following systems (if so equipped) is not functioning properly:

- Intelligent Emergency Braking with Pedestrian Detection
- Intelligent Emergency Braking
- Blind Spot Warning (BSW)
- Rear Cross Traffic Alert (RCTA)

If one or more of these warning appears, have the system checked. It is recommended that you visit a NISSAN dealer for this service.

Not Available Parking Brake On

This message may appear when the ProPILOT Assist system is engaged.

Under the following condition, the ProPILOT Assist system is automatically canceled:

- The electronic parking brake is applied.

The above system cannot be used when the electronic parking is activated.

For additional information, see "ProPILOT/ ProPILOT Assist (P. 5-133) and "Parking brake" (P. 5-27).

Not Available Poor Road Conditions

This message may appear when the ProPILOT Assist system, Intelligent Blind Spot Intervention or the Intelligent Lane Intervention system is engaged.

Under the following conditions, the ProPILOT Assist system, Intelligent Blind Spot Intervention or the Intelligent Lane Intervention system is automatically canceled:

- When the VDC or ESP system is turned on

The above system cannot be used in some situations (VDC or ESP operates, wheel slip and VDC or ESP system is off.)

Not Available Seat Belt Not Fastened

This message may appear when the ProPILOT Assist system is engaged.

Under the following condition, the ProPILOT Assist system is automatically canceled:

- When the driver's seat belt is not fastened

The above system cannot be used when the driver's seat belt is not fastened.

Not Available System Malfunction

This warning appears when one or more of the following systems (if so equipped) is not functioning properly.

- ProPILOT Assist
- Blind Spot Warning (BSW)
- Intelligent Blind Spot Intervention
- Lane Departure Warning (LDW)
- Intelligent Lane Intervention
- Intelligent Cruise Control (ICC)
- Intelligent Emergency Braking with Pedestrian Detection
- Rear Automatic Braking (RAB)
- Emergency Lane Assist (ELA)

If one or more of these warnings appear, have the system checked. It is recommended that you visit a NISSAN dealer for this service.

For additional information, see "ProPILOT/ ProPILOT Assist" (P. 5-133), "Intelligent Blind Spot Intervention" (P. 5-76), "Blind Spot Warning (BSW)" (P. 5-64), "Lane Departure Warning (LDW)" (P. 5-39), "Intelligent Lane Intervention" (P. 5-46), "Intelligent Cruise Control (ICC) " (P. 5-105), "Intelligent Emergency Braking with Pedestrian Detection"

(P. 5-188), "Rear Automatic Braking (RAB)" (P. 5-171), or "Emergency Lane Assist (ELA)" (P. 5-54).



ProPILOT Assist indicators

These indicators show the ProPILOT Assist system status. The status is shown by color. For additional information, see "ProPILOT/ProPILOT Assist" (P. 5-133).



Rear Automatic Braking (RAB) system warning indicator

This indicator appears to indicate the status of the Rear Automatic Braking (RAB) system. For additional information, see "Rear Automatic Braking (RAB)" (P. 5-171).



Rear Cross Traffic Alert (RCTA) indicator

This indicator appears when the RCTA system is unavailable.

For additional information, see "Rear Cross Traffic Alert (RCTA)" (P. 5-90).



Speed Limit Sign indicator

This message may appear when the Traffic Sign Recognition system is engaged.

For additional information, see "Traffic Sign Recognition (TSR)" (P. 5-36).



Steering Assist status

This indicator appears when the Steering Assist system is engaged.

For additional information, see "ProPILOT/ProPILOT Assist" (P. 5-133).

Unavailable: High Cabin Temperature or Not available High cabin temperature

This message appears when the camera detects an interior temperature of more than 40°C (104°F). For additional information, see "Intelligent Emergency Braking with Pedestrian Detection" (P. 5-188), "Intelligent Emergency Braking" (P. 5-178), "ProPILOT/ProPILOT Assist" (P. 5-133), "Intelligent Lane Intervention" (P. 5-46), "Lane Departure Warning (LDW)" (P. 5-39), "Intelligent Blind Spot Intervention" (P. 5-76) or "Traffic Sign Recognition (TSR) (P. 5-36).

Unavailable Side Radar Obstruction or Not available Side radar obstructed

This message appears when the Blind Spot Warning (BSW) or Rear Cross Traffic Alert (RCTA) systems become unavailable because a radar blockage is detected. For additional information, see "Blind Spot Warning (BSW)" (P. 5-64) or "Rear Cross Traffic Alert (RCTA)" (P. 5-90).



Vehicle ahead detection indicator

This indicator shows when the following systems are engaged and have detected a vehicle:

- Intelligent Emergency Braking with Pedestrian Detection
- Intelligent Emergency Braking
- Intelligent Forward Collision Warning

For additional information, see "Intelligent Emergency Braking with Pedestrian Detection" (P. 5-188), "Intelligent Emergency Braking" (P. 5-178) or "Intelligent Forward Collision Warning" (P. 5-202).

VEHICLE INFORMATION DISPLAY 12.3 INCH (31 cm) TYPE B (if so equipped)

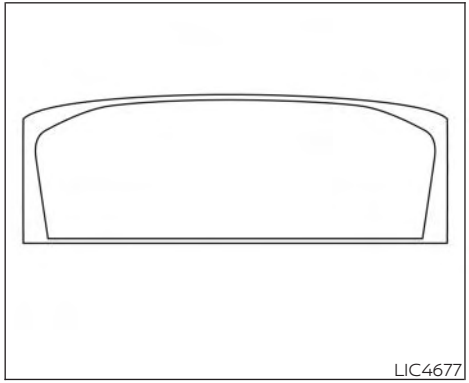
LIC4677

The vehicle information display is located to the left of the speedometer. It displays such items as:

- Vehicle settings
- Indicators and warnings
- Information/warning messages
- Tire pressure information
- Drive computer information
- Cruise control system information
- Driving Aids (if so equipped)
- ProPILOT Assist (if so equipped)
- NISSAN Intelligent Key® operation information
- Audio information
- Compass and navigation information (if so equipped)
- Shift position
- Distance to empty
- Odometer/twin trip odometer
- Clock and outside temperature
- Intelligent 4x4 (if so equipped)

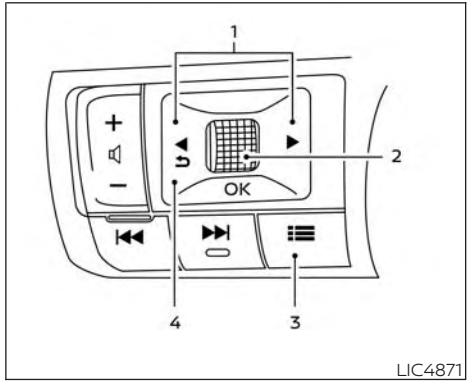

LIC4871

HOW TO USE THE VEHICLE INFORMATION DISPLAY

The vehicle information display can be navigated using the ◄ ⮌ , ► buttons and scroll dial located on the steering wheel.

1. ◄ , ► — navigate through the items in the vehicle information display.

2. Scroll dial — Use the scroll dial to navigate through the items and change or select an item in the vehicle information display. The scroll dial allows up or down navigation and press to select.
3. Short cut menu button— Press this button to open a shortcut menu.
4. ⮌ — go back to the previous menu

STARTUP DISPLAY

When the vehicle in placed in the ON position the screens that display in the vehicle information include:

- Active system status (if so equipped)
- Drive computer
- Fuel economy
- Distance to empty
- Tire pressure information
- Intelligent 4x4 (if so equipped)
- Navigation (if so equipped)
- Audio
- Warnings
- Settings

Warnings will only display if there are any present. For additional information on warnings and indicators see "Vehicle information display warnings and indicators" (P. 2-66).

To control what items display in the vehicle information display, see "Customize Display or Display Settings" (P. 2-64).

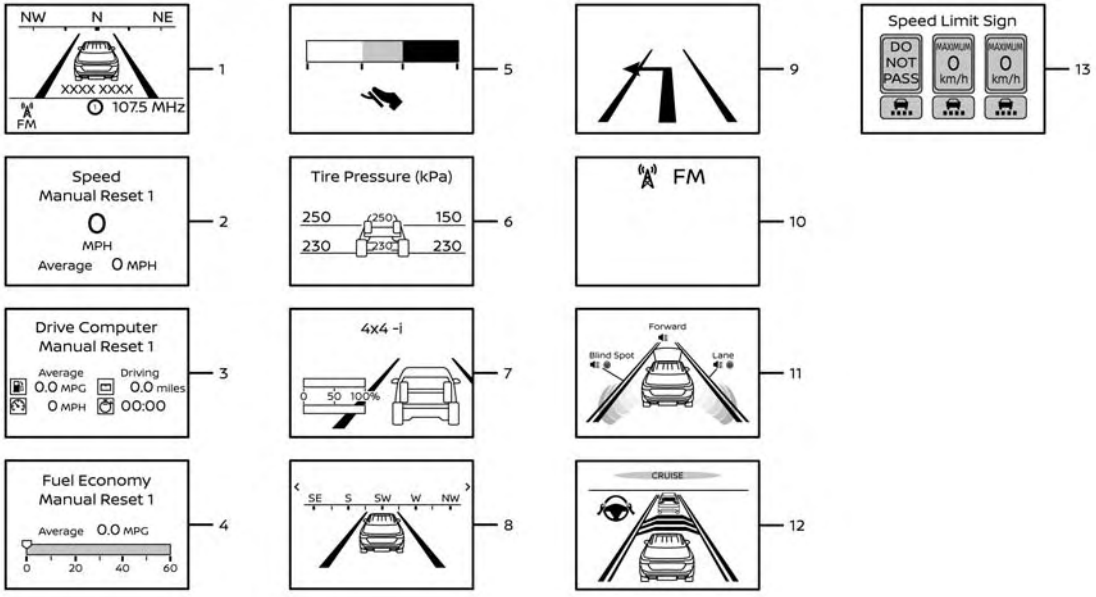

LIC4908

TRIP COMPUTER

1. Home

The Home mode shows the following information:

- Vehicle speed
- Navigation (if so equipped)
- Audio

The Home display will switch to the Audio display by pressing the OK button.

2. Speed and Average speed (if so equipped)

The Speed and Average speed mode shows the current vehicle speed and the average vehicle speed since the last reset. The Speed and Average speed mode has three modes of operation. You can switch between Manual Reset1, Manual Reset2 or Auto Refuel by pushing the scroll dial.

Manual Reset1 can be reset manually by using the scroll dial.

Manual Reset2 can be reset manually by using the scroll dial or will be reset automatically each time the ignition switch is placed in the OFF position (if so equipped).

Auto Refuel will be reset automatically each time when refueling.

3. Drive Computer

Average fuel consumption:

The average fuel consumption shows the average fuel consumption since the last reset.

Average speed:

The average speed shows the average vehicle speed since the last reset.

Trip odometer:

The trip odometer shows the total distance the vehicle has been driven since the last reset.

Elapsed time:

The elapsed time shows the time since the last reset.

The Drive computer mode has three modes of operation. You can switch between Manual Reset1, Manual Reset2 or Auto Refuel by pushing the scroll dial.

Manual Reset1 can be reset manually by using the scroll dial.

Manual Reset2 can be reset manually by using the scroll dial or will be reset automatically each time the ignition switch is placed in the OFF position (if so equipped).

Auto Refuel will be reset automatically each time when refueling.

4. Fuel economy display

Current fuel consumption:

The Fuel economy display mode shows the current fuel consumption.

Average fuel consumption:

The Fuel economy display mode shows the average fuel consumption since the last reset.

The Fuel economy display mode has three modes of operation. You can switch between Manual Reset1, Manual Reset2 or Auto Refuel by pushing the scroll dial.

Manual Reset1 can be reset manually by using the scroll dial.

Manual Reset2 can be reset manually by using the scroll dial or will be reset automatically each time the ignition switch is placed in the OFF position (if so equipped).

Auto Refuel will be reset automatically each time when refueling.

5. Eco Pedal Guide (if so equipped)

When the ECO mode is selected, you can view ECO Pedal Guide function for improving fuel economy.

The ECO Pedal Guide mode has three modes of operation. You can switch between Manual Reset1, Manual Reset2 or Auto Refuel by pushing the scroll dial.

Manual Reset1 can be reset manually by using the scroll dial.

Manual Reset2 can be reset manually by using the scroll dial or will be reset automatically each time the ignition switch is placed in the OFF position (if so equipped).

Auto Refuel will be reset automatically each time when refueling.

For additional information, see "ECO Mode" (P. 5-34).

6. Tire Pressures

The tire pressure mode shows the pressure of all four tires while the vehicle is driven.

With the "Tire Pres ECO advice" function ON, when the tire pressure is getting low, "Check Tire Pressures for Best Fuel Economy" or "Add air for Best Fuel Economy" appears. For additional information, see "ECO Mode Setting" (P. 2-60) or "Tire Pres ECO advice" (P. 5-35).

When the "Tire Pressure Low — Add Air" warning appears, the display can be switched to the tire pressure mode by pushing the scroll dial to reveal additional details on the displayed warning.

7. Intelligent 4x4 torque distribution display (if so equipped)

When the Intelligent 4x4 torque distribution display is selected, you can view the distribution ratio of the transmission torque to the front and rear wheels during driving.

8. Compass (if so equipped)

This display indicates the direction the vehicle is heading.

9. Navigation

When the route guidance is set in the navigation system, this item shows the navigation route information.

10. Audio

The audio mode shows the status of audio information.

11. Driver Assistance

The Driver Assistance mode shows the operating condition for the following systems:

- Forward
  - — Intelligent Emergency Braking with Pedestrian Detection system
  - — Intelligent Emergency Braking system
  - — Intelligent Forward Collision Warning
- Lane:
  - — Lane Departure Warning (LDW)
  - — Intelligent Lane Intervention
- Blind Spot:
  - — Blind Spot Warning (BSW)
  - — Intelligent Blind Spot Intervention (if so equipped)

For additional information, see "Intelligent Blind Spot Intervention" (P. 5-76), "Blind Spot Warning (BSW)" (P. 5-64), "Lane Departure Warning (LDW)" (P. 5-39), "Intelligent Emergency Braking with Pedestrian Detection" (P. 5-188), "Intelligent Emergency Braking" (P. 5-178), "Intelligent Forward Collision Warning" (P. 5-202) or "Intelligent Lane Intervention" (P. 5-46).

12. ProPILOT Assist (if so equipped)

The ProPILOT Assist mode shows operating conditions for the following systems:

- Intelligent Cruise Control (ICC)
- Steering Assist

The display will also be shown when the ProPILOT Assist is turned on. For additional information, see "ProPILOT/ProPILOT Assist" (P. 5-133).

13. Traffic Sign Recognition (if so equipped)

The Traffic Sign Recognition (TSR) system provides the driver with information about the most recently detected speed limit.

For additional information, see "Traffic Sign Recognition (TSR) (P. 5-36).

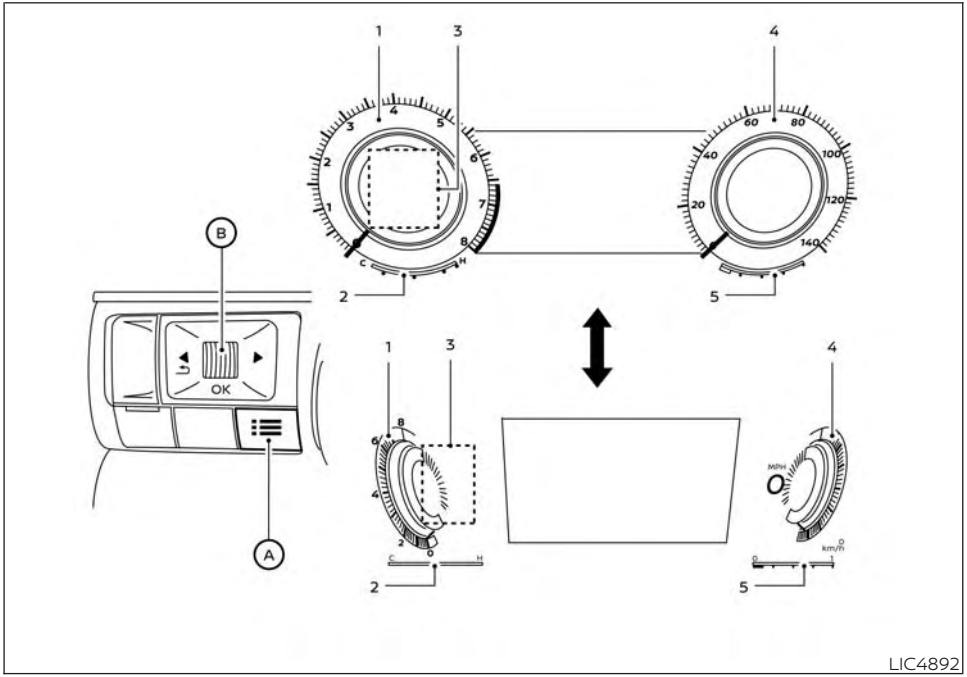

CHANGING THE METER SCREEN VIEW

1. Tachometer
2. Engine coolant temperature gauge
3. Personal display
4. Speedometer
5. Fuel gauge

For models with the full-screen display, the meter screen view can be changed to expand the vehicle information display.

To change the meter screen view:

1. Push the shortcut menu button Ⓐ on the left side of the steering wheel. "Shortcut Menu" appears on the vehicle information display.
2. Select "Change Meter View" or "Change Display View" by rotating the scroll dial Ⓑ and pushing it to change the view.

OIL CONTROL SYSTEM (if so equipped)

The oil control system can be accessed in the Maintenance portion of the vehicle information display settings.

Engine oil information informs the distance to oil change. Never exceed one year or 10,000 km (6,250 miles) between oil change intervals for the 3.5L 6 cylinder (VQ35DD engine model).

Display when ignition is ON	Display timing	Action Required
Engine Oil Service due in xxx miles	Remaining oil life is less than 1500 km (940 miles).	Plan to have your vehicle serviced.
Engine Oil Service due	Remaining oil life is 0 km (0 miles).	Have your vehicle serviced within two weeks or less than 800 km (500 miles).

The oil change interval cannot be adjusted manually.

The distance to oil change interval is calculated depending on the driving conditions and set automatically by the oil control system. A reminder will be displayed when approaching the end of the service interval.

When the Factory Reset option is selected in the vehicle information display, the oil control system will also be reset to initial value. Please change the engine oil when Factory Reset is selected.

⚠ CAUTION

If the oil replacement indicator is displayed, change the engine oil within two weeks or less than 800 km (500 miles).

Operating the vehicle with deteriorated oil can damage the engine.

To reset oil control system:

1. Place the ignition switch in the ON position.
2. Push the ◄ and ► buttons located on the steering wheel until "Settings" displays in the vehicle information display. Use the scroll dial to select "Maintenance". Then, press the scroll dial.
3. Select the "Oil Control System" and press the scroll dial.
4. Press the scroll dial according to the reset instructions displayed at the bottom of the "Oil Control System" maintenance screen.

For additional information, see "Maintenance" (P. 2-63).

SETTINGS

The setting mode allows you to change the information displayed in the vehicle information display:

- VDC or ESP Setting
- Driver Assistance
- Personal Display
- Head—Up Display (if so equipped)
- ECO Mode Setting or ECO Settings
- TPMS Setting or TPMS Settings
- Clock
- Vehicle Settings
- Maintenance
- Customize Display or Display Settings
- Unit/Language
- Factory Reset

VDC or ESP Setting

The VDC or ESP Setting menu allows the user to enable or disable the Vehicle Dynamic Control (VDC) system or Electronic Stability Program (ESP) system.

Some menu items shown below may not be equipped on your vehicle.

Menu item	Explanation
System	Allows the user to turn the VDC or ESP system on or off. For additional information, see "Vehicle Dynamic Control (VDC) or Electronic Stability Program (ESP) system" (P. 5-232).

Driver Assistance

The driver assistance menu allows the user to change the various driving aids, parking aids and braking features.

Some menu items shown below may not be equipped on your vehicle.

Menu item		Explanation
Steering Assist		Allows user to turn the Steering Assist of the ProPILOT Assist system on or off. For additional information, see "ProPILOT Assist" (P. 5-133).
Lane Assist or Lane		Displays available lane options.
	Warning	Allows user to turn the Lane Departure Warning (LDW) system on or off. For additional information, see "Lane Departure Warning (LDW)" (P. 5-39).
	Intervention	Allows user to turn Intelligent Lane Intervention system on or off. For additional information, see "Intelligent Lane Intervention" (P. 5-46).
	Emergency Lane Assist	Allows user to turn the Emergency Lane Assist system on or off. For additional information, see "Emergency Lane Assist (ELA) (P. 5-54).
	Lane Sensitivity	Allows user to set the system sensitivity to Strong, Normal or Mild.
Blind Spot Assist or Blind Spot		Displays available blind spot options.
	Warning	Allows user to turn the Blind Spot Warning (BSW) system on or off. For additional information, see "Blind Spot Warning (BSW)" (P. 5-64).
	Intervention	Allows user to turn the Intelligent Blind Spot Intervention system on or off. For additional information, see "Intelligent Blind Spot Intervention " (P. 5-76).
Emergency Brake		Displays available emergency brake options.
	Front	Allows user to turn the front emergency braking system on or off. For additional information, see "Intelligent Emergency Braking with Pedestrian Detection" (P. 5-188), "Intelligent Emergency Braking" (P. 5-178) and "Intelligent Forward Collision Warning" (P. 5-202).
	Rear	Allows user to turn the rear emergency braking system on or off. For additional information, see "Rear Automatic Braking (RAB)" (P. 5-171).

Menu item		Explanation
Speed Limit Sign or Traffic Sign		Allows user to turn the Speed Limit Sign on or off. For additional information, see "Traffic Sign Recognition (TSR)" (P. 5-36).
Spd.Limit Assist or Speed Limit Link		Allows user to turn the speed limit assist ON or OFF.
Speed Link Offset		Allows user to set whether the speed limit used by [Speed Limit Link] should be accepted exactly, or with a tolerance of –10 km/h (–5 mph) to +10 km/h (+5 mph) adjust.
Parking Aids		Displays available parking aids.
	Moving Object	Allows user to turn the Moving Object Detection (MOD) on or off. For additional information, see "Moving Object Detection (MOD)" (P. 4-26).
	Auto Show Sonar or Display	Allows user to auto display the sonar. For additional information, see "Front and rear sonar system" (P. 5-237).
	Front Sonar or Front	Allows user to turn the front sonar on or off.
	Rear Sonar or Rear	Allows user to turn the rear sonar on or off.
	Sonar Distance or Distance	Allows user to set the distance sensor range to Long/Medium/Short.
	Sonar Volume or Volume	Allows the user to set the parking sensor volume to High/Medium/Low.
Rear Cross Traffic Alert		Allows user to turn the Rear Cross Traffic Alert (RCTA) system on or off. For additional information, see "Rear Cross Traffic Alert (RCTA)" (P. 5-90).
Driver Alertness or Driver Attention Alert		Allows user to turn the Intelligent Driver Alertness on or off. For additional information, see "Intelligent Driver Alertness" (P. 5-217).
Timer Alert		Allows user to set the timer alert.
Low Temp. Alert		Allows user to turn the low temperature alert on or off.

Personal Display

The Personal Display menu allows the user to set various screens in the personal display area in the vehicle information display.

Some menu items shown below may not be equipped on your vehicle.

Menu item	Explanation
Blank	Allows user to select the blank screen.
Navigation	Allows user to select the navigation screen.
Time to Destination	Allows user to select the time to destination screen.
Fuel Economy	Allows user to select the fuel economy screen.
Trip	Allows user to select the trip screen.
Gear position	Allows user to select the gear position screen.
Average speed	Allows user to select the average speed screen.

Head-Up Display (if so equipped)

The Head—Up Display menu allows the user to control the Head—Up Display feature.

Some menu items shown below may not be equipped on your vehicle.

Menu item		Explanation
Brightness		Allows user to change the brightness.
Height		Allows user to change the height.
Rotation		Allows user to change the rotation.
Contents selection		Displays the available content in the Head-Up Display.
	Navigation	Allows user to turn the navigation on or off.
	Driving Assist	Allows user to turn the driving assist on or off.
	Speed Limit Sign or Traffic Sign	Allows user to turn the speed limit sign on or off.
	Audio	Allows user to turn the audio on or off.
	TEL/SMS or Telephone	Allows user to turn the TEL/SMS on or off.
Reset		Allows user to reset the settings. Once selected, the user can confirm or cancel the reset.

ECO Mode Setting or ECO Settings

The ECO mode setting menu allows the user to change the settings for the ECO mode.

Some menu items shown below may not be equipped on your vehicle.

Menu item		Explanation
ECO Customize or ECO Drive Mode		Displays available ECO mode settings.
	Cruise Control	Allows user to turn the Cruise Control mode on or off. For additional information, see “Cruise Control” (P. 5-103).
	Air Conditioning or Climate Control	Allows user to turn the Air Conditioning mode on or off. For additional information, see “ECO Customize” (P. 5-34).
ECO Drive Assist or ECO Info Settings		Displays available ECO information settings.
	ECO Indicator	Allows user to turn the ECO indicator on or off.
	ECO Drive Report	Allows user to turn the ECO Drive Report on or off.
View History		Displays the history report for the vehicle.
Tire Pres ECO advice or Tyre ECO advice		Allows user to turn the tire pressure ECO advice on or off.

TPMS Setting or TPMS Settings

The TPMS settings menu allows the user to view or change the tire pressure units displayed in the vehicle information display.

Some menu items shown below may not be equipped on your vehicle.

Menu item	Explanation
Target front	Allows user to view the front tire pressures.
Target rear	Allows user to view the rear tire pressures.
Tire Pressure Unit or Tyre Pressure Unit	Allows user to select the tire pressure units that will display in the vehicle information display.
TPMS reset or Calibrate	Allows user to cancel or confirm the request.

Clock

Allows user to adjust the clock settings and time within the vehicle information display.

Some menu items shown below may not be equipped on your vehicle.

Menu item	Explanation
Clock Mode	Allows user to adjust the clock mode to Auto, Manual or Time Zone.
Clock Format	Allows user to adjust the clock format to 24H or 12H.
Daylight Saving	Allows user to turn on or off the daylight saving mode.
Time Zone	Allows user to select a time zone.
Set Clock Manually	Allows user to set the clock manually.

Vehicle Settings

The vehicle settings menu allows the user to change the settings for lights, wipers, locking, keys, and other vehicle settings.

Some menu items shown below may not be equipped on your vehicle.

Menu item		Explanation
Power Back Door		Allows user to turn the power back door on or off.
Lighting		Displays the available lighting options.
	Welcome Headlight or Welcome Light	Allows user to turn the welcome headlight on or off.
	Auto Room Lamp	Allows user to turn the auto room lamp on or off.
	Accent Lighting or Mood Lighting	Allows user to adjust the accent lighting.
	Auto Headlight or Light Sensitivity	Allows user to change when the lights illuminate based on the brightness outside the vehicle.
	Light Off Delay	Allows user to change the duration of time that the automatic headlights stay on after the vehicle is shut off.

Locking		Displays the available locking options.
	Ext. Door Switch or I-Key Door Lock	Allows user to turn the exit door switch on or off.
	Selective Unlock	Allows user to turn the selective unlock feature on or off. When this item is turned on (default), only the driver's door is unlocked after the driver's door unlock operation. All the doors can be unlocked if the capacitive touch pad is pressed within 5 seconds of the door handle capacitive unlock feature. When this feature is turned off, all the doors unlock when the driver's door unlock operation is performed once.
	Auto Door Unlock	Allows the user to set the auto door unlock to Shift to P or Shift to Park, IGN OFF and OFF.
	Horn beeps on lock or Horn Beeps on lock	Allows the user to turn the horn beeps on lock feature on or off.
	Walk Away Lock	Allows the user to turn the walk away lock function ON or OFF. For additional information, see "Walk away lock function" (P. 3-18).
	Approach Unlock	Allows the user to turn the approach unlock function ON or OFF. For additional information, see "Approach unlock function" (P. 3-18).
Wipers		Displays the available wiper options.
	Speed Dependent	Allows user to turn the speed dependent wipers on or off.
	Rain Sensor or Auto Wipe	Allows user to turn the rain sensor on or off.
	Reverse Link	Allows user to turn the reverse link feature on or off.
Driving Position		Displays the available driving position options.
	Exit Seat Slide	When the exit seat slide is on the driver's seat will move backward for easy exit when the ignition switch is placed in the OFF position and the driver's door is opened. After getting into the vehicle and placing the ignition switch in the ON position, the driver's seat will move to the previous set position. For additional information, see "Memory seat" (P. 3-47).
	Exit Steering Up	When the exit steering up feature is turned on, the steering wheel moves upward for easy exit when the ignition switch is in the OFF position and the driver's door is opened. After getting into the vehicle and placing the ignition switch in the ON position, the steering wheel moves to the previous position. For additional information, see "Memory seat" (P. 3-47).
Rear Door Alert		Displays the available Rear Door Alert options.
	Horn & Alert	When selected, the alert is displayed; and the horn sounds.
	Alert Only	When selected, only the alert is displayed.
	OFF	When selected, no alert or horn will be active.

Maintenance

The maintenance menu allows the user to set reminders for various vehicle maintenance items.

Some menu items shown below may not be equipped on your vehicle.

⚠ WARNING

The tire replacement indicator is not a substitute for regular tire checks, including tire pressure checks. For additional information, see "Changing wheels and tires" (P. 8-40). Many factors including tire inflation, alignment, driving habits and road conditions affect tire wear and when tires should be replaced. Setting the tire replacement indicator for a certain driving distance does not mean your tires will last that long. Use the tire replacement indicator as a guide only and always perform regular tire checks. Failure to perform regular tire checks, including tire pressure checks could result in tire failure. Serious vehicle damage could occur and may lead to a collision, which could result in serious personal injury or death.

Menu item	Explanation
Service	Allows user to reset the current interval. This should only be done after completing oil change maintenance.
Air Filter	Allows user to set a reminder at a specific interval or reset the current one.
Tire or Tyre	This indicator appears when the customer set distance is reached for replacing tires. You can set or reset the distance for replacing tires.
Other	This indicator appears when the customer set distance is reached for checking or replacing maintenance items other than the engine oil, oil filter and tires. Other maintenance items can include such things as air filter or tire rotation. The distance for checking or replacing the items can be set or reset.

Customize Display or Display Settings

The customize display menu allows the user to customize the information that appears in the vehicle information display.

Some menu items shown below may not be equipped on your vehicle.

Menu item		Explanation
Main Menu Selection or Contents Selection		Displays the available screens that can be shown in the vehicle information display.
	Home	Allows user to turn the home screen on or off in the vehicle information display.
	Blank	Allows user to turn the blank on or off in the vehicle information display.
	Drive Computer	Allows user to turn the drive computer screen on or off in the vehicle information display.
	Fuel Economy	Allows user to turn the fuel economy screen on or off in the vehicle information display.
	TPMS or Tyre Pressures	Allows user to turn the TPMS screen on or off in the vehicle information display.
	4x4–I or 4x4–I Torque Split	Allows user to turn the 4x4–I screen on or off in the vehicle information display.
	Compass	Allows user to turn the compass screen on or off in the vehicle information display.
	Navigation	Allows user to turn the navigation screen on or off in the vehicle information display.
	Speed Limit Sign	Allows user to turn the speed limit sign screen on or off in the vehicle information display.
	Audio	Allows user to turn the audio controls screen on or off in the vehicle information display.
	Driving Aids	Allows user to turn the driving aids screen on or off in the vehicle information display.
	Cruise	Allows user to turn the cruise control screen on or off in the vehicle information display.
Route Guidance		Displays the available route guidance settings.
	Alerts or Alert(s)	Allows user to turn the alerts on or off.
Transition (Cruise) or AUTO Cruise Display		Allows user to turn the transition (cruise) on or off.
Welcome Effect		Displays the available welcome effect settings.
	Animation	Allows user to turn the animation effect on or off.

Operation guidance or Operation Guidance			Displays the available operation guidance settings.
	Lights		Allows user to turn the light mode guidance on or off.
	Wiper		Displays the available wiper settings.
		Front	Allows user to turn the front wiper guidance on or off.
		Rear	Allows user to turn the rear wiper guidance on or off.
	High Beam Assist		Allows user to turn the High Beam Assist on or off.
	Seat Memory		Allows user to turn the seat memory on or off.
	Cruise Control		Allows user to turn the cruise control on or off.

Unit/Language

The unit/language menu allows the user to change the units shown in the vehicle information display.

Some menu items shown below may not be equipped on your vehicle.

Menu item	Explanation
Mileage/Fuel or Distance/Fuel	Displays the available mileage/fuel display units and allows user to select preferred unit for display.
Tire Pressure or Tyre Pressures	Allows user to select the tire pressure display units.
Temperature	Allows user to select the temperature display units.
Language	Displays the available language options and allows user to select preferred language for display.

Factory Reset

The factory reset menu allows the user to restore the vehicle information display settings to factory status.

Some menu items shown below may not be equipped on your vehicle.

Menu item	Explanation
Factory Reset	Allows user to reset the vehicle information display settings to the original factory settings. Once selected, the user can confirm or cancel the reset.

VEHICLE INFORMATION DISPLAY WARNINGS AND INDICATORS

The following messages may appear in your vehicle information display.



Engine start operation for Intelligent Key system (if I-Key battery level is low)

This indicator appears when the battery of the Intelligent Key is low and when the Intelligent Key system and the vehicle are not communicating normally.

If this appears, touch the ignition switch with the Intelligent Key while depressing the brake pedal. For additional information, see "NISSAN Intelligent Key® battery discharge" (P. 5-17).



Key ID Incorrect

This warning appears when the ignition switch is placed from the OFF position and the Intelligent Key is not recognized by the system. You cannot start the engine with an unregistered key.

For additional information, see "NISSAN Intelligent Key®" (P. 3-7).



I-Key System Error: See Owner's Manual

After the ignition switch is placed in the ON position, this warning appears for a period of time and then turns off.

The Key System Error message warns of a malfunction with the Intelligent Key system. If the warning appears while the engine is stopped, it may be impossible to start the engine.

If the warning appears while the engine is running, you can drive the vehicle. However, in these cases, have the system checked. It is recommended that you visit a NISSAN dealer for this service.



Key Battery Low

This indicator appears when the Intelligent Key battery is running out of power.

If this indicator appears, replace the battery with a new one. For additional information, see "Battery replacement" (P. 8-30).



No Key Detected

This warning appears when the Intelligent Key is left outside the vehicle with the ignition switch in the ON position. Make sure the Intelligent Key is inside the vehicle.

For additional information, see "NISSAN Intelligent Key®" (P. 3-7).



Automatic brake hold indicator (white/green)

The Automatic brake hold indicator (white) appears when the Automatic brake hold system is on standby.

The Automatic brake hold indicator (green) appears while the Automatic brake hold system is operating.

For additional information, see "Automatic brake hold" (P. 5-29).



Brightness indicator

This indicator shows the brightness adjustment of the instrument panel. For additional information, see "Instrument brightness control" (P. 2-90).

Check Rear Seat For All Articles or Reminder: Check Rear Seat

When the system is enabled, this message appears when the vehicle comes to a complete stop and the vehicle is transitioned from the D (Drive) position to the P (Park) position (when the "alert only" setting is enabled). This message appears when the

vehicle comes to a complete stop, the vehicle is transitioned from the D (Drive) position to the P (Park) position and the driver exits the vehicle (when the "alert and horn" setting is enabled). This message alerts the driver, after a period of time, to check for items in the rear seat after the audible alert has been provided.

NOTE:

This system is disabled until a driver enables it using the vehicle information display. For additional information, see "How to use the vehicle information display" (P. 2-49).

For additional information, see "Rear Door Alert" (P. 2-104).

Rear Door Alert is Activated

When the system is enabled, this message appears when the Rear Door Alert system is active and can remind the driver to check the back seat.

- Using the steering wheel switch, a driver can select "Dismiss Message" to clear the display for a period of time. If no selection is made, this message automatically turns off after a period of time.
- Using the steering wheel switch, a driver can select "Disable Alert" to disable the horn alert for the remainder of the current trip.

⚠WARNING

Selecting "Dismiss Message" during a stop within a trip temporarily dismisses the message for that stop without turning the system off. Alerts can be provided for other stops during the trip. Selecting "Disable Alert" turns off the Rear Door Alert system for the remainder of a trip and no audible alert will be provided.

NOTE:

This system is disabled until a driver enables it using the vehicle information display. For additional information, see "How to use the vehicle information display" (P. 2-49).

For additional information, see "Rear Door Alert" (P. 2-104).



Caution Steep slope

This indicator appears, and a chime sounds when the Automatic brake hold function is activated while the vehicle is on a steep hill. Apply the foot brake to stop the vehicle moving. For additional information, see "Automatic brake hold" (P. 5-29).

Chassis Control System Error See Owner's Manual or Chassis control system fault: See Owner's Manual

This warning appears if the chassis control module detects a malfunction in the chassis control system. Have the system checked. It is recommended that you visit a NISSAN dealer for this service. For additional information, see "Chassis Control" (P. 5-235).



Door/Liftgate Open

This warning appears when a door or the liftgate has been opened.

Drive Mode Selector indicator

When a driving mode is selected using the Drive Mode Selector, the selected mode indicator is displayed.

- SAND (4WD models)
- MUD/RUT (4WD models)
- SNOW
- AUTO (4WD models)
- ECO
- SPORT
- STANDARD (2WD models)
- TOW

For additional information, see "Drive Mode Selector" (P. 5-32).



Electric shift control system indicator

This indicator appears when a malfunction occurs in the electric shift control system. When the master warning indicator appears, the chime sounds and the following message is displayed in the vehicle information display: "When parked apply parking brake".

When the ignition is placed in the OFF position, the chime sounds continuously. Ensure the parking brake is applied

Have the system checked. It is recommended that you visit a NISSAN dealer for this service.



Front fog light indicator (green)

The front fog light indicator appears when the front fog lights are on. For additional information, see "Front and rear fog light switch" (P. 2-91).

Headlight System Error: See Owner's Manual or Headlight system fault: See Owner's Manual

This warning appears when there is an error with the system. For additional information, see "Headlight and turn signal switch" (P. 2-83).



High Beam Assist indicator (green)

This indicator appears when the headlights come on while the headlight switch is in the AUTO position with the high beams selected and by pressing the button at the end of the headlight stalk with the engine running. This indicates that the high beam assist is operational.

For additional information, see "Headlight and turn signal switch" (P. 2-83).



High beam indicator (blue)

This blue indicator appears when the headlight high beams are on and goes out when the low beams are selected.

The high beam indicator also appears when the passing signal is activated.



Hill descent control system ON indicator

When the ignition switch is placed in the ON position, this indicator appears briefly and then turns off.

The indicator appears when the hill descent control system is activated.

If the hill descent control switch is on and the indicator blinks, the system is not engaged.

If the indicator does not appear when the hill descent switch is on, the system may not be functioning properly. Have the system checked. It is recommended that you visit a NISSAN dealer for this service.

For additional information, see "Hill descent control switch" (P. 2-95) "Hill descent control system" (P. 5-236).

Low beam indicator

This indicator appears when the switch is turned to the position. The headlights will come on; and the front side, tail, number plate, and instrument lights remain on.

Low Fuel level

This warning appears when the fuel level in the fuel tank is getting low. Refuel as soon as it is convenient, preferably before the fuel gauge reaches 0 (Empty). **There will be a small reserve of fuel in the tank when the fuel gauge needle reaches 0 (Empty).**

Low Oil Pressure: See Owner's Manual

This warning appears in the message area of the vehicle information display if low oil pressure is detected. This gauge is not designed to indicate low oil level. **The low oil pressure warning is not designed to indicate a low oil level.** Use the dipstick to check the oil level. For additional information, see "Engine oil" (P. 8-11).

Low Outside Temperature

This warning appears if the outside temperature is below 3°C (37°F). The temperature can be changed to display in Celsius or Fahrenheit. For additional information, see "Settings" (P. 2-56).

Low tire pressure indicator

Your vehicle is equipped with a Tire Pressure Monitoring System (TPMS) that monitors the tire pressure of all tires except the spare.

The low tire pressure indicator warns of low tire pressure or indicates that the TPMS is not functioning properly.

After the ignition switch is placed in the ON position, this indicator appears for about 1 second and turns off.

Low Washer Fluid

This warning appears when the windshield-washer fluid is at a low level. Add windshield-washer fluid as necessary. For additional information, see "Windshield-washer fluid" (P. 8-16).

Malfunction Indicator (MIL)

If this indicator appears steady or blinks while the engine is running, it may indicate a potential emission control malfunction.

The MIL may also come on steady if the vehicle runs out of fuel. Check to make sure that the vehicle has at least 3 gallons (11.4 liters) of fuel in the fuel tank.

After a few driving trips, the indicator should turn off if no other potential emission control system malfunction exists.

If this indicator appears steady for 20 seconds and then blinks for 10 seconds when the engine is not running, it indicates that the vehicle is not ready for an emission control system inspection/maintenance test.

Master warning indicator

When the ignition is in the ON position, the master warning indicator appears with various warning messages.

For additional information, see "Vehicle information display–7 inch (18 cm) Type A" (P. 2-24) or "Vehicle information display—12.3 inch (31 cm) Type B" (P. 2-49).

Neutral Hold Mode activated

This message appears when the Neutral hold mode is activated. To exit the Neutral hold mode, place the vehicle in any other shift position other than N (Neutral). For additional information, see "Neutral hold mode function" (P. 5-25).

Neutral Hold Mode was not activated

This message appears when the Neutral hold mode is unavailable. To activate the Neutral hold mode, wait for a while without shifting and then perform the operations again. For additional information, see "Neutral hold mode function" (P. 5-25).

Neutral Hold Mode guidance

This message appears after approximately 5 seconds when the ignition switch is placed in the OFF position while the shift position is in the N (Neutral) position (Neutral hold mode is available). For additional information, see "Neutral hold mode function" (P. 5-25).



Parking Aids

This indicator appears when the sensor is activated. For additional information, see "Front and rear sonar system" (P. 5-237).

Parking Sensor Error: See Owner's Manual or Parking sensor system fault: See Owner's Manual

This warning appears when there is an error with the system. For additional information, see "Front and rear sonar system" (P. 5-237).

Power will turn off to save the battery

Under the specific conditions, this warning may appear in the vehicle information display after a period of time if the ignition switch is in the ON position and if the vehicle is in P (Park). For additional information, see "Push-button ignition switch positions" (P. 5-16).

Power turned off to save the battery

Under the specific conditions, this warning may appear after the ignition switch is automatically turned off. For additional information, see "Push-button ignition switch positions" (P. 5-16).



Press brake to operate switch

This indicator appears if the Automatic brake hold switch is pushed without depressing the brake pedal while the Automatic brake hold function is activated. Depress the brake pedal and push the switch to deactivate the Automatic brake hold function.

For additional information, see "Automatic brake hold" (P. 5-29).



Press brake pedal to prevent rolling

This warning appears in the following situation:

- This warning appears and chime sounds if the vehicle moves while the Automatic brake hold function is activated. Apply the foot brake to stop the vehicle moving.



Push brake and ignition button to start or Push brake and start switch to drive

This indicator appears when the shift position is in the P (Park) position.

This indicator also appears when the vehicle has been started using the Remote Engine Start (if so equipped) function.

This indicator means that the engine will start by pushing the ignition switch with the brake pedal depressed. You can start the engine from any position of the ignition switch.

Rear seat belt warning

- This warning includes display of the seat belts for rear positions only. Rear seat belts that are unfastened will appear red.
- If any rear seat belts are unfastened when the ignition switch is pushed to the ON position, this warning will display for about one minute, or until dismissed.
- When a rear seat belt is changed from fastened to unfastened, this warning will display for over one minute, or until dismissed, and the seat belt warning light will turn on.
- If the vehicle is driven above 15 km/h (9 mph) during or after the status change, this warning will display, the seat belt warning light will blink, and the chime will sound for over one minute. During this time, the warning and chime cannot be dismissed unless the rear seat belt is fastened again. Once the seat belt warning light and chime have turned off, the display will remain until dismissed.

NOTE:

- **While it appears, this message will also display the status of all doors and rear hatch.**
- **Opening and closing a rear door while stopped will reset this warning, similar to pushing the ignition switch to ON again.**

Release Parking Brake

This warning appears when the accelerator pedal is depressed when the electronic parking brake automatic release function cannot be used. Release the electronic parking brake manually.

Reminder: Turn OFF Headlights

This warning appears when the headlights are left in the ON position when exiting the vehicle. Place the headlight switch in the OFF or AUTO position. For additional information, see "Headlight and turn signal switch" (P. 2-83).

Seat belt indicator and chime

- The indicator and chime remind you to fasten the seat belts.
- The seat belt indicator appears when the ignition switch is pushed to the ON position if the driver's seat belt is not fastened, or if the front passenger seat belt is not fastened when occupied.
- The seat belt indicator also appears if a rear passenger seat belt is changed from fastened to unfastened.
- If the driver's seat belt is not fastened when the ignition switch is pushed to the ON position, the chime will sound shortly.
- If the vehicle is driven above 15 km/h (9 mph) in the conditions that illuminate the seat belt indicator, the indicator will begin to blink and the chime will sound for over one minute, or until the seat belt is fastened again.

NOTE:

- **The indicator and/or chime may activate if an object is placed in the unoccupied front passenger seat. In this case, please remove the object from the front passenger seat.**
- **The indicator and/or chime may activate if any seat belt is unfastened before the vehicle comes to a complete stop. Please remain fastened until the vehicle has come to a complete stop.**

Shipping Mode On Push Storage Fuse

This warning may appear if the extended storage switch is not pushed in. When this warning appears, push in the extended

storage switch to turn off the warning. For additional information, see "Extended storage switch" (P. 2-110).

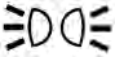

Side light and headlight indicator (green)

The side indicator and headlight indicator appears when the side light or headlights are on (not including the Daytime Running Lights (DRL) system or signature lights). If the headlight switch is in the AUTO position, the side indicator and headlight indicator will appear when the headlights turn on. For additional information, see "Headlight and turn signal switch" (P. 2-83).



Steep Slope Apply foot brake

This indicator appears, and chime sounds if the "Caution Steep slope" indicator has appeared over about 3 minutes. Then the parking brake will automatically be applied and the brake force of the Automatic brake hold will be released, and the vehicle may move or roll away unexpectedly. Apply the foot brake to stop the vehicle moving.

For additional information, see "Automatic brake hold" (P. 5-29).



Time for a break?

This indicator appears when the set time is reached. The time can be set up to six hours. For additional information, see "Settings" (P. 2-56).

Tire Pressure Low - Add Air or Low Tyre Pressure

This warning appears when the low tire pressure warning light in the meter illuminates and low tire pressure is detected. The warning appears each time the ignition switch is placed in the ON position as long as the low tire pressure warning light remains illuminated. If this warning appears, stop the vehicle and adjust the tire pressures of all four tires to the recommended COLD tire pressure shown on the tire placard. For additional information, see "Low tire pressure warning light" (P. 2-19) and "Tire Pressure Monitoring System (TPMS)" (P. 5-7).

TPMS Error: See Owner's Manual

This warning appears when there is an error with your TPMS. If this warning appears, have the system checked. It is recommended that you visit a NISSAN dealer for this service.



Transmission Shift Position indicator

This indicator shows the transmission shift position.



Turn signal/hazard indicators (green)

The appropriate indicator flashes when the turn signal switch is activated.

Both indicators flash when the hazard switch is turned on.



When parked apply parking brake

This message appears when a malfunction occurs in the electric shift control system below 10 km/h (6 mph).

Have the system checked. It is recommended that you visit a NISSAN dealer for this service.

4WD Error: See Owner's Manual or 4WD System Fault See Owner's Manual

This warning appears when the 4-Wheel Drive (4WD) system is not functioning properly while the engine is running. Reduce vehicle speed and have your vehicle checked

by a NISSAN dealer as soon as possible. For additional information, see "Intelligent 4x4" (P. 5-222).

4WD High Temp. Stop Vehicle

This warning appears when the oil temperature of the powertrain parts will increase due to the difference in rotation between the front and rear wheels is large (wheel slip), such as when driving the vehicle on rough roads, through sand or mud, or freeing a stuck vehicle. If this warning is displayed, stop the vehicle with the engine idling, as soon as it is safe to do so. In these cases, the 4WD changes to 2WD to protect the powertrain parts. Then if the warning turns off, you can continue 4WD driving.

Tire Size Incorrect See Owner's Manual or Tyre Size Incorrect See Owner's Manual

This warning may appear if there is a large difference between the diameters of the front and rear wheels. Pull off the road in a safe area, with the engine idling. Check that all the tire sizes, brand, construction and tread patterns are the same, that the tire pressure is correct and that the tires are not excessively worn. If you have any problems, please change tires or adjust to the correct tire pressure. Do not select the SNOW or SAND or MUD/RUT (if so equipped) mode with the Drive Mode Selector and do not drive fast. For additional information, see "Intelligent 4x4" (P. 5-222).



Blind Spot Warning (BSW) indicator

This indicator appears when the BSW system is available.

For additional information, see "Blind Spot Warning (BSW)" (P. 5-64).



Cruise control indicator

This indicator shows the cruise control system status.

When cruise control is activated, a green circle will illuminate to indicate it is set. The vehicle information display will also display the speed the cruise control was set at. If you accelerate past the set speed, the speed will blink until you either cancel cruise control or go back to the set speed. If cruise control is on and canceled, the speed will be displayed to show the speed the vehicle will return to if the resume button is activated.

Currently not available

This message may appear when the ProPILOT Assist system, Intelligent Blind Spot Intervention, Intelligent Cruise Control or the Intelligent Lane Intervention system is engaged.

Under the following conditions, the ProPILOT Assist, Intelligent Blind Spot Intervention, Intelligent Cruise Control or the Intelligent Lane Intervention system is automatically canceled:

- When the VDC or ESP system is turned off

The above system cannot be used in some situations (VDC or ESP operates, wheel slip and VDC or ESP system is off.)



Driver Attention Alert Malfunction or Driver Attention Alert System Fault

This warning appears when the Intelligent Driver Alertness system is not functioning properly. For additional information, see "Intelligent Driver Alertness" (P. 5-217).



Driver Attention Alert — Take a Break?

This alert appears when the system has detected that the driver may be displaying fatigue or a lack of attention.



Emergency Lane Assist (ELA) OFF indicator

For details about the Emergency Lane Assist (ELA) system, see "Emergency Lane Assist (ELA)" (P. 5-54).

Forward Driving Aids Temporarily Disabled Front Sensor Blocked See Owner's Manual or Temporarily Disabled Front Radar Blocked

This message appears when the front radar sensor may be obstructed due to:

- mud, dirt, snow, ice, etc.
- inclement weather (rain, fog, snow, etc.).

All forward driving aids are temporarily disabled until the system detects that the front radar sensor is no longer obstructed.

For additional information, see:

- Intelligent Emergency Braking with Pedestrian Detection (P. 5-188)
- Intelligent Emergency Braking (P. 5-178)
- ProPILOT/ProPILOT Assist (P. 5-133)
- Intelligent Forward Collision Warning (P. 5-202)
- Intelligent Cruise Control (ICC) (P. 5-105)
- Emergency Lane Assist (ELA) (P. 5-54)



Intelligent Emergency Braking system warning indicator

This warning appears when the ignition switch is placed in the ON position.

This warning appears when the Intelligent Emergency Braking system is set to OFF in the vehicle information display.

If the warning appears when the Intelligent Emergency Braking system is on, it may indicate that the system is unavailable. For additional information, see "Intelligent Emergency Braking" (P. 5-178).



Intelligent Emergency Braking with Pedestrian Detection system warning indicator

This warning appears when the ignition switch is placed in the ON position.

This warning appears when the Intelligent Emergency Braking with Pedestrian Detection system is set to OFF in the vehicle information display.

If the warning appears when the Intelligent Emergency Braking with Pedestrian Detection system is on, it may indicate that the system is unavailable. For additional information, see "Intelligent Emergency Braking with Pedestrian Detection" (P. 5-188).



Intelligent Emergency Braking emergency warning indicator

This indicator appears along, with an audible warning, when the system detects the possibility of a forward collision.

For additional information, see "Intelligent Emergency Braking" (P. 5-178).



Intelligent Emergency Braking with Pedestrian Detection emergency warning indicator

This indicator appears along, with an audible warning, when the system detects the possibility of a forward collision.

For additional information, see "Intelligent Emergency Braking with Pedestrian Detection" (P. 5-188).



Intelligent Cruise Control (ICC) indicators

These indicators show the ICC system status. The status is shown by color. For additional information, see " Intelligent Cruise Control (ICC)" (P. 5-105).



Intelligent Lane Intervention/Intelligent Blind Spot Intervention/ ProPILOT Assist indicator

This indicator shows when the Intelligent Lane Intervention, Intelligent Blind Spot Intervention, or ProPilot Assist system is engaged.

For additional information, see "Intelligent Lane Intervention" (P. 5-46), "Intelligent Blind Spot Intervention" (P. 5-76), or "ProPILOT Assist" (P. 5-133).



Lane Departure Warning (LDW) indicator

This indicator appears when the LDW system is engaged.

For additional information, see "Lane Departure Warning (LDW)" (P. 5-39).



Lane Departure Warning (LDW)/Intelligent Lane Intervention (I-LI)/ Emergency Lane Assist (ELA) indicator

For details about the Lane Departure Warning (LDW) and Intelligent Lane Intervention (I-LI) systems, see "Lane Departure Warning (LDW)" (P. 5-39) or "Intelligent Lane Intervention (I-LI)" (P. 5-46).

For details about the Emergency Lane Assist (ELA) system, see "Emergency Lane Assist (ELA)" (P. 5-54).

Malfunction: See Owner's Manual or System fault: See Owner's Manual

This warning appears when one or more of the following systems (if so equipped) is not functioning properly:

- Intelligent Emergency Braking with Pedestrian Detection
- Intelligent Emergency Braking
- Blind Spot Warning (BSW)
- Rear Cross Traffic Alert (RCTA)

If one or more of these warning appears, have the system checked. It is recommended that you visit a NISSAN dealer for this service.

Not Available Parking Brake On

This message may appear when the ProPILOT Assist system is engaged.

Under the following condition, the ProPILOT Assist system is automatically canceled:

- The electronic parking brake is applied.

The above system cannot be used when the electronic parking is activated.

For additional information, see "ProPILOT/ ProPILOT Assist (P. 5-133) and "Parking brake" (P. 5-27).

Not Available Poor Road Conditions

This message may appear when the ProPILOT Assist system, Intelligent Blind Spot Intervention or the Intelligent Lane Intervention system is engaged.

Under the following conditions, the ProPILOT Assist system, Intelligent Blind Spot Intervention or the Intelligent Lane Intervention system is automatically canceled:

- When the VDC or ESP system is turned on

The above system cannot be used in some situations (VDC or ESP operates, wheel slip and VDC or ESP system is off.)

Not Available Seat Belt Not Fastened

This message may appear when the ProPILOT Assist system is engaged.

Under the following condition, the ProPILOT Assist system is automatically canceled:

- When the driver's seat belt is not fastened

The above system cannot be used when the driver's seat belt is not fastened.

Not Available System Malfunction

This warning appears when one or more of the following systems (if so equipped) is not functioning properly.

- ProPILOT Assist
- Blind Spot Warning (BSW)
- Intelligent Blind Spot Intervention
- Lane Departure Warning (LDW)
- Intelligent Lane Intervention
- Intelligent Cruise Control (ICC)
- Intelligent Emergency Braking with Pedestrian Detection
- Rear Automatic Braking (RAB)
- Emergency Lane Assist (ELA)

If one or more of these warnings appear, have the system checked. It is recommended that you visit a NISSAN dealer for this service.

For additional information, see "ProPILOT/ProPILOT Assist" (P. 5-133), "Intelligent Blind Spot Intervention" (P. 5-76), "Blind Spot Warning (BSW)" (P. 5-64), "Lane Departure Warning (LDW)" (P. 5-39), "Intelligent Lane Intervention" (P. 5-46), "Intelligent Cruise Control (ICC) " (P. 5-105), "Intelligent Emergency Braking with Pedestrian Detection" (P. 5-188), "Rear Automatic Braking (RAB)" (P. 5-171), or "Emergency Lane Assist (ELA)" (P. 5-54).



Parking Sensor

This indicator appears when the sensor is activated. For additional information, see "Front and rear sonar system" (P. 5-237).



ProPILOT Assist indicators

These indicators show the ProPILOT Assist system status. The status is shown by color. For additional information, see "ProPILOT/ProPILOT Assist" (P. 5-133).



Rear Automatic Braking (RAB) system warning indicator

This indicator appears to indicate the status of the Rear Automatic Braking (RAB) system. For additional information, see "Rear Automatic Braking (RAB)" (P. 5-171).



Rear Cross Traffic Alert (RCTA) indicator

This indicator appears when the RCTA system is unavailable.

For additional information, see "Rear Cross Traffic Alert (RCTA)" (P. 5-90).



Speed Limit Sign indicator

This message may appear when the Traffic Sign Recognition system is engaged.

For additional information, see "Traffic Sign Recognition (TSR)" (P. 5-36).



Steering Assist status

This indicator appears when the Steering Assist system is engaged.

For additional information, see "ProPILOT/ProPILOT Assist" (P. 5-133).

Unavailable: High Cabin Temperature or Not available High cabin temperature

This message appears when the camera detects an interior temperature of more than 40°C (104°F). For additional information, see "Intelligent Emergency Braking with Pedestrian Detection" (P. 5-188), "Intelligent Emergency Braking" (P. 5-178), "ProPILOT/

ProPILOT Assist" (P. 5-133), "Intelligent Lane Intervention" (P. 5-46), "Lane Departure Warning (LDW)" (P. 5-39), "Intelligent Blind Spot Intervention" (P. 5-76) or "Traffic Sign Recognition (TSR) (P. 5-36).

Unavailable Side Radar Obstruction or Not available Side radar obstructed

This message appears when the Blind Spot Warning (BSW) or Rear Cross Traffic Alert (RCTA) systems become unavailable because a radar blockage is detected. For additional information, see "Blind Spot Warning (BSW)" (P. 5-64) or "Rear Cross Traffic Alert (RCTA)" (P. 5-90).

Vehicle ahead detection indicator

This indicator shows when the following systems are engaged and have detected a vehicle:

- Intelligent Emergency Braking with Pedestrian Detection
- Intelligent Emergency Braking
- Intelligent Forward Collision Warning

For additional information, see "Intelligent Emergency Braking with Pedestrian Detection" (P. 5-188), "Intelligent Emergency Braking" (P. 5-178) or "Intelligent Forward Collision Warning" (P. 5-202).

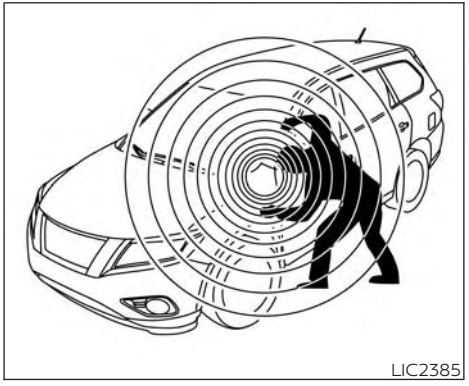
LIC2385

Your vehicle has two types of security systems:

- Vehicle security system
- NISSAN Vehicle Immobilizer System

VEHICLE SECURITY SYSTEM

The vehicle security system provides visual and audible alarm signals if someone opens the doors, hood or liftgate when the system is armed. It is not, however, a motion detection type system that activates when a vehicle is moved or when a vibration occurs.

The system helps deter vehicle theft but cannot prevent it, nor can it prevent the theft of interior or exterior vehicle components in all situations. Always secure your vehicle even if parking for a brief period. Never leave your keys in the vehicle, and always lock the vehicle when unattended. Be aware of your surroundings, and park in secure, well-lit areas whenever possible.

Many devices offering additional protection, such as component locks, identification markers, and tracking systems, are available at auto supply stores and specialty shops. A NISSAN dealer may also offer such equipment. Check with your insurance company to see if you may be eligible for discounts for various theft protection features.

How to arm the vehicle security system

1. Close all windows and the moonroof (if so equipped). **The system can be armed even if the windows and moonroof are open.**
2. Remove the Intelligent Key from the vehicle.
3. Close all doors, hood and liftgate. Lock all doors. The doors can be locked with the Intelligent Key, door capacitive touch pad (if so equipped) or power door lock switch.
4. Wait 30 seconds for the system to complete the pre-armed phase. If during the pre-armed phase one of the following occurs, the system will not arm:

- Any door is unlocked with the Intelligent Key or door capacitive touch pad (if so equipped).
- The ignition switch is placed in the ON position.
- **Even when the driver and/or passengers are in the vehicle, the system will activate when all the doors, hood and liftgate are locked with the ignition switch placed in the LOCK position. When placing the ignition switch in the ON position, the system will be released.**

Vehicle security system activation

The vehicle security system will give the following alarm:

- The headlights blink and the horn sounds intermittently.
- The alarm automatically turns off after a period of time. However, the alarm reactivates if the vehicle is tampered with again. The alarm can be shut off by unlocking the driver's door by pressing the button on the Intelligent Key or placing the ignition switch in the ON position.

The alarm is activated by:

- opening a door without using the Intelligent Key (even if the door is unlocked by using the inside lock knob or the power door lock switch).

How to stop an activated alarm

The alarm stops only by unlocking the driver's door or the liftgate by pressing the button on the Intelligent Key or pushing the capacitive touch pad (if so equipped) on the driver's or passenger's door with the Intelligent Key in range of the door handle.

NISSAN VEHICLE IMMOBILIZER SYSTEM

The NISSAN Vehicle Immobilizer System will not allow the engine to start without the use of a registered key.

If the engine fails to start using a registered key (for example, when interference is caused by another registered key, an automated toll road device or automatic payment device on the key ring), restart the engine using the following procedures:

1. Leave the ignition switch in the ON position for approximately 5 seconds.
2. Place the ignition switch in the OFF or LOCK position and wait approximately 10 seconds.

3. Repeat steps 1 and 2.
4. Restart the engine while holding the device (which may have caused the interference) separate from the registered key.

If the no start condition reoccurs, NISSAN recommends placing the registered key on a separate key ring to avoid interference from other devices.

Never leave these keys in the vehicle.

FCC Notice:

For USA:

This device complies with Part 15 of the FCC Rules. Operation is subject to the following two conditions: (1) This device may not cause harmful interference, and (2) this device must accept any interference received, including interference that may cause undesired operation.

NOTE:

Changes or modifications not expressly approved by the party responsible for compliance could void the user's authority to operate the equipment.

For Canada:

This device contains licence-exempt transmitter(s)/receiver(s) that comply with Innovation, Science and Economic Development Canada's licence-exempt RSS(s). Operation is subject to the following two conditions: (1) This device may not cause interference. (2) This device must accept any interference, including interference that may cause undesired operation of the device.

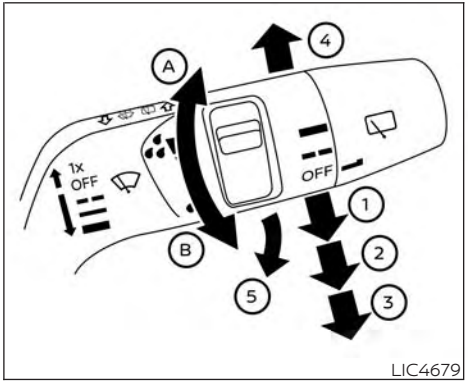

Type A (if so equipped)

SWITCH OPERATION

⚠WARNING

In freezing temperatures the washer solution may freeze on the windshield and obscure your vision which may lead to an accident. Warm the windshield with the defogger before you wash the windshield.

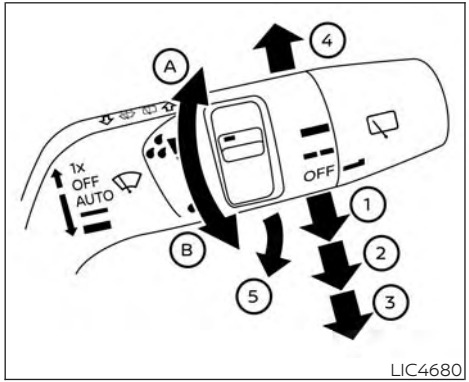

Type B (if so equipped)

⚠CAUTION

- **Do not operate the washer continuously for more than 30 seconds.**
- **Do not operate the washer if the windshield-washer fluid reservoir is empty.**
- **Do not fill the windshield-washer fluid reservoir with windshield-washer fluid concentrates at full strength. Some methyl alcohol based windshield-washer fluid concentrates may permanently stain the grille if spilled while filling the windshield-washer fluid reservoir.**
- **Pre-mix windshield-washer fluid concentrates with water to the manufacturer's recommended levels before pouring the fluid into the windshield-washer fluid reservoir. Do not use the windshield-washer fluid reservoir to mix the windshield-washer fluid concentrate and water.**

NOTE:

If the windshield wiper operation is interrupted by snow or ice, the wiper may stop moving to protect its motor. If this occurs, turn the wiper switch to the OFF position and remove the snow or ice that is on and around the wiper arms. After approximately 1 minute, turn the switch on again to operate the wiper.

The windshield wiper and washer operates when the ignition switch is in the ON position.

Push the lever down to operate the wiper at the following speed:

① Intermittent (INT) — intermittent operation can be adjusted by turning the knob toward Ⓐ (faster) or Ⓑ (slower). Also, the intermittent operation speed varies in accordance with the vehicle speed (if so equipped). (For example, when the vehicle speed is high, the intermittent operation speed will be faster.)

② Low (LO) — continuous low speed operation

③ High (HI) — continuous high speed operation

Push the lever up ④ to have one sweep operation (MIST) of the wiper.

Pull the lever toward you ⑤ to operate the washer. The wiper will also operate several times.

NOTE:

The Wiper with Speed feature and wiper mode guidance may be disabled. For additional information, see "Vehicle information display–7 inch (18 cm) Type A" (P. 2-24) or "Vehicle information display—12.3 inch (31 cm) Type B" (P. 2-49).

⚠WARNING

Do not operate the windshield wiper while the wiper arm is pulled up. The wiper arm may be damaged.

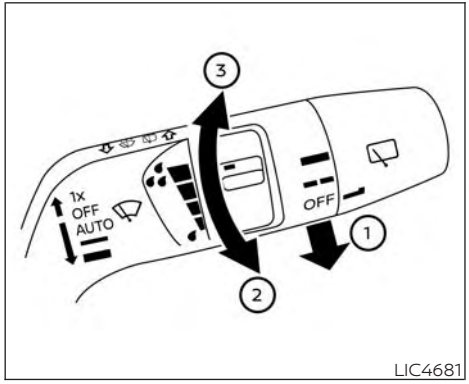

RAIN-SENSING AUTO WIPER SYSTEM (if so equipped)

⚠CAUTION

- **Do not touch the rain sensor and around it when the wiper switch is in the AUTO position and the ignition switch is in the ON position. The wipers may operate unexpectedly and cause an injury or may damage a wiper.**
- **The rain-sensing auto wipers are intended for use during rain. If the switch is left in the AUTO position, the wipers may operate unexpectedly when dirt, fingerprints, oil film or insects are stuck on or around the sensor. The wipers may also operate when exhaust gas or moisture affect the rain sensor.**
- **When the windshield glass is coated with water repellent, the speed of the rain-sensing auto wipers may be higher even though the amount of the rainfall is small.**
- **Be sure to turn off the rain-sensing auto wiper system when you use a car wash.**
- **The rain-sensing auto wipers may not operate if rain does not hit the rain sensor even if it is raining.**
- **Using Genuine NISSAN wiper blades is recommended for proper operation of the rain-sensing auto wiper system. For additional information, see "Windshield wiper blades" (P. 8-23).**

The rain-sensing auto wiper system can automatically turn on the wipers and adjust the wiper speed depending on the rainfall and the vehicle speed by using the rain sensor located on the upper part of the windshield.

To set the rain-sensing auto wiper system, place the lever in the AUTO position ①. The wiper will sweep once while the ignition switch is in the ON position.

The rain sensor sensitivity level can be adjusted by turning the knob toward the rear ② (Low) or toward the front ③ (High).

– High — High sensitive operation
– Low — Low sensitive operation

To turn the rain-sensing auto wiper system off, rotate the lever to the OFF position, or rotate the lever to the low or high position.

The rain-sensing feature may be disabled. For additional information, see "Vehicle information display–7 inch (18 cm) Type A" (P. 2-24) or "Vehicle information display—12.3 inch (31 cm) Type B" (P. 2-49).

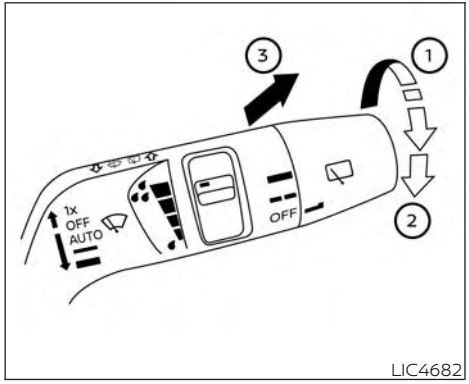

REAR SWITCH OPERATION

⚠ WARNING

In freezing temperatures the washer solution may freeze on the rear window and obscure your vision which may lead to an accident. Warm the rear window with the defogger before you wash the rear window.

⚠ CAUTION

- **Do not operate the washer continuously for more than 30 seconds.**
- **Do not operate the washer if the windshield-washer fluid reservoir is empty.**
- **Do not fill the windshield-washer fluid reservoir with windshield-washer fluid concentrates at full strength. Some methyl alcohol based windshield-washer fluid concentrates may permanently stain the grille if spilled while filling the windshield-washer fluid reservoir.**
- **Pre-mix windshield-washer fluid concentrates with water to the manufacturer's recommended levels before pouring the fluid into the windshield-washer fluid reservoir. Do not use the windshield-washer fluid reservoir to mix the windshield-washer fluid concentrate and water.**

NOTE:

If the rear window wiper operation is interrupted by snow, etc., the wiper may stop moving to protect its motor. If this occurs, turn the wiper switch to OFF and remove the snow, etc. on and around the wiper arms. After about 1 minute, turn the switch on again to operate the wiper.

The rear window wiper and washer operate when the ignition switch is in the ON position. Turn the switch clockwise from the OFF position to operate the wiper.

① Intermittent (INT) — intermittent operation (not adjustable)

② Low (ON) — continuous low speed operation

Push the switch forward ③ to operate the washer. The wiper will also operate several times.

NOTE:

The rear wiper guidance may be disabled. For additional information, see "Vehicle information display–7 inch (18 cm) Type A" (P. 2-24) or "Vehicle information display—12.3 inch (31 cm) Type B" (P. 2-49).

REAR WINDOW AND OUTSIDE MIRROR DEFOGGER SWITCH

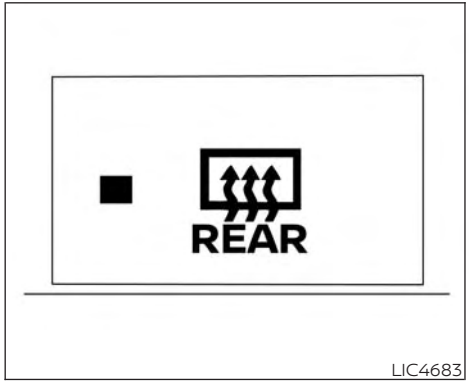

LIC4683

To defog the rear window glass and outside mirrors, start the engine and push the rear window defogger switch on. The rear window defogger indicator light on the switch comes on. Push the switch again to turn the defogger off.

The rear window defogger automatically turns off after approximately 15 minutes.

⚠ CAUTION

When cleaning the inner side of the rear window, be careful not to scratch or damage the rear window defogger.

NOTE:

The top and bottom few rows of wires on the rear window are not part of the rear window defogger system. These wires make up the antenna for the audio system.

HEADLIGHT AND TURN SIGNAL SWITCH

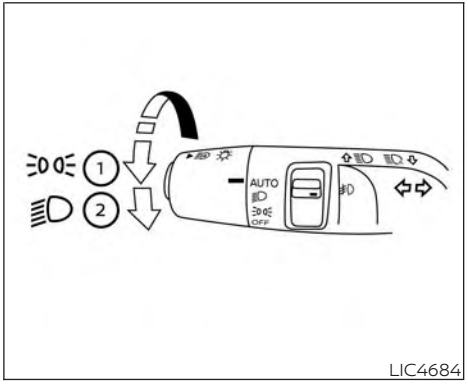

LIC4684

Type A (if so equipped)

HEADLIGHT CONTROL SWITCH

Lighting

① Rotate the switch to the position, and the front parking, tail, license plate, and instrument panel lights will come on.

② Rotate the switch to the position, and the headlights will come on and all the other lights remain on.

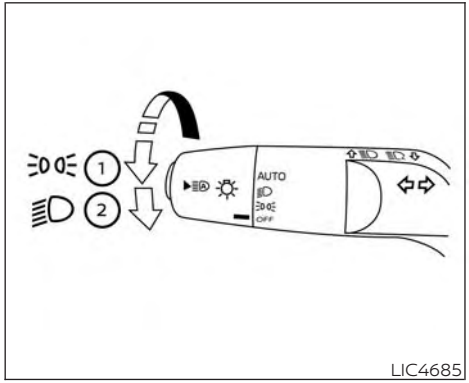

LIC4685

Type B (if so equipped)

NOTE:

The Lights mode guidance feature may be disabled. For additional information, see "Vehicle information display–7 inch (18 cm) Type A" (P. 2-24) or "Vehicle information display—12.3 inch (31 cm) Type B" (P. 2-49).

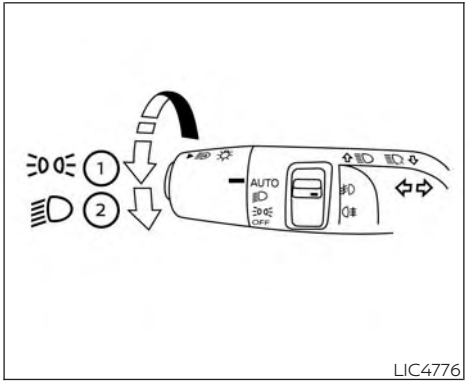

LIC4776

Type C (if so equipped)

⚠ CAUTION

Use the headlights with the engine running to avoid discharging the vehicle battery.

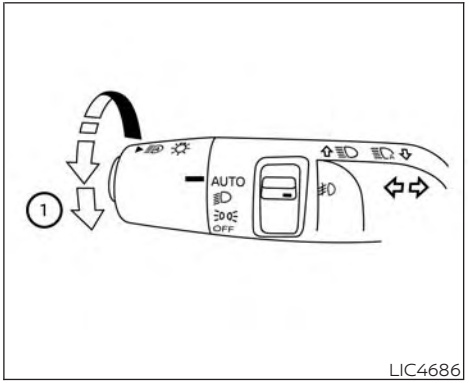

LIC4686

Autolight system (if so equipped)

The autolight system allows the headlights to turn on and off automatically. The autolight system can:

- Turn on the headlights, front parking, tail, license plate and instrument panel lights automatically when it is dark.
- Turn off all the lights when it is light.
- Keep all the lights on for a period of time after you place the ignition switch in the OFF position and all doors are closed.

- Turn on the headlights if the windshield wipers make multiple continuous passes within approximately one minute of the first pass (if so equipped). The headlights remain on until the wipers are turned off for a short period of time.

NOTE:
Autolight activation sensitivity (if so equipped) and the time delay for autolight shutoff can be adjusted. For additional information, see "Vehicle information display–7 inch (18 cm) Type A" (P. 2-24) or "Vehicle information display — 12.3 inch (31 cm) Type B" (P. 2-49).

To turn on the autolight system:

- Place the headlight switch in the AUTO position ①.
- Place the ignition switch in the ON position.
- The autolight system automatically turns the headlights on and off.

Initially, if the ignition switch is turned OFF and a door is opened and left open, the headlights remain ON for a period of time. If another door is opened while the headlights are on, then the timer is reset.

To turn the autolight system off, place the switch in the OFF, , or position.

The headlights will turn on automatically at twilight or in rainy weather (when the windshield wiper is operated continuously).

If the ignition switch is placed in the OFF position and one of the doors is opened and this condition is continued, the headlights remain on for 5 minutes.

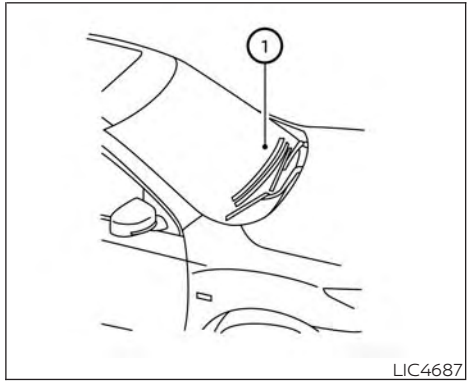

Left Hand Drive models (if so equipped)

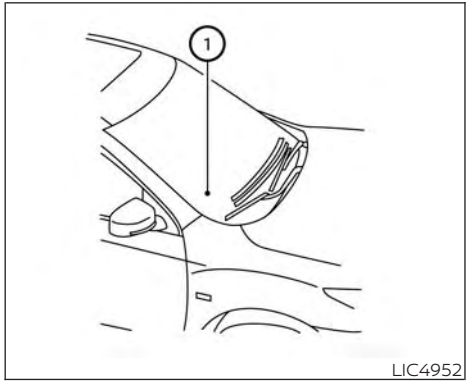

LIC4952

Right Hand Drive models (if so equipped)

Be sure you do not put anything on top of the autolight sensor located in the top side of the instrument panel ①. The autolight sensor controls the autolight; if it is covered, the autolight sensor reacts as if it is dark out and the headlights will illuminate. If this occurs while parked with the engine off and the ignition switch placed in the ON position, your vehicle's battery could become discharged.

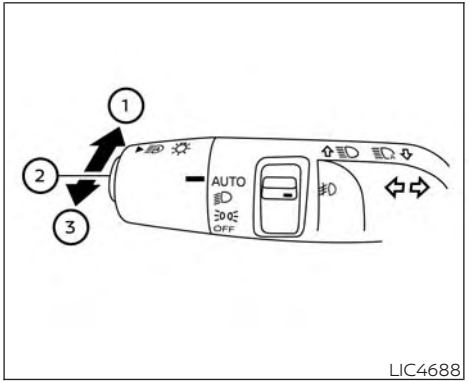

LIC4688

Headlight beam select

① To select the high beam function, push the lever forward while the low beams are on. The high beam lights come on and the indicator light illuminates.

② Pull the lever back to return to the low beam.

③ Pulling and releasing the lever flashes the headlight high beams on and off. The low beams do not need to be on for this to function.

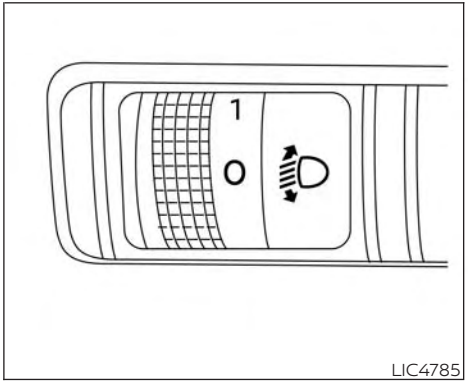

LIC4785

Manual headlight aiming control (if so equipped)

Depending on the number of occupants in the vehicle and the load it is carrying, the headlight axis may be higher than desired. If the vehicle is traveling on a hilly road, the headlights may directly hit the rearview mirror of the vehicle ahead or the windshield of the oncoming vehicle. The light axis can be lowered with the operation of the switch.

The larger the number designated on the switch, the lower the axis.

When traveling without a heavy load or on a flat road, select position 0.

Select the switch position by referring to the following sample.

Vehicle Load	Switch Position	
	7 Seat	8 Seat
Driver only	0	0
Driver/front passenger	1	0
Driver/front seat passenger/3rd row seat passengers	1	1
Driver/front seat passenger/2nd row passengers/3rd row passengers	2	1
Driver/front seat passenger/2nd row passengers/3rd row passengers/cargo	2	2
Driver/cargo/no trailer	3	2
Driver/cargo/trailer	3	3

High Beam Assist (if so equipped)

The High Beam Assist system will operate when the vehicle is driven at speeds of approximately 40 km/h (25 mph) and above. If an oncoming vehicle or leading vehicle appears in front of your vehicle when the headlight high beam is on, the headlight will be switched to the low beam automatically.

⚠WARNING

- **The High Beam Assist system is a convenience but it is not a substitute for safe driving operation. The driver should remain alert at all times, ensure safe driving practices and switch the high beams and low beam manually when necessary.**
- **The high beam or low beam may not switch automatically under the following conditions. Switch the high beam and low beam manually.**
  - **During bad weather (rain, fog, snow, wind, etc.).**
  - **When a light source similar to a headlight or tail light is in the vicinity of the vehicle.**
  - **When the headlights of the oncoming vehicle or the leading vehicle are turned off, when the color of the light is affected due to foreign materials on the lights, or when the light beam is out of position.**
  - **When there is a sudden, continuous change in brightness.**
  - **When driving on a road that passes over rolling hills, or a road that has level differences.**
  - **When driving on a road with many curves.**
  - **When a sign or mirror-like surface is reflecting intense light towards the front of the vehicle.**
  - **When the container, etc. being towed by a leading vehicle is reflecting intense light.**
  - **When a headlight on your vehicle is damaged or dirty.**
  - **When the vehicle is leaning at an angle due to a punctured tire, being towed, etc.**

- **The timing of switching the low beam and high beam may change under the following situations.**
  - **The brightness of the headlights of the oncoming vehicle or leading vehicle.**
  - **The movement and direction of the oncoming vehicle and the leading vehicle.**
  - **When only one light on the oncoming vehicle or the leading vehicle is illuminated.**
  - **When the oncoming vehicle or the leading vehicle is a two-wheeled vehicle.**
  - **Road conditions (incline, curve, the road surface, etc.).**
  - **The number of passengers and the amount of luggage.**

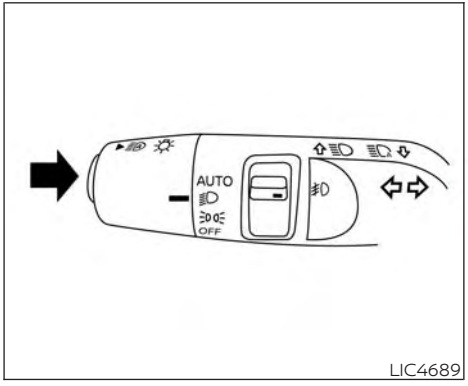

LIC4689

High Beam Assist operation

To activate the High Beam Assist system, turn the headlight switch to the AUTO position and push the switch as illustrated with the engine running. The High Beam Assist indicator light in the meter will illuminate while the headlights are turned on.

If the High Beam Assist indicator light does not illuminate in the above condition, it may indicate that the system is not functioning properly. Have the system checked, it is recommended that you visit a NISSAN dealer for this service.

When the vehicle speed lowers to less than approximately 25 km/h (16 mph), the headlight uses the low beam.

To turn off the High Beam Assist system, push the switch again..

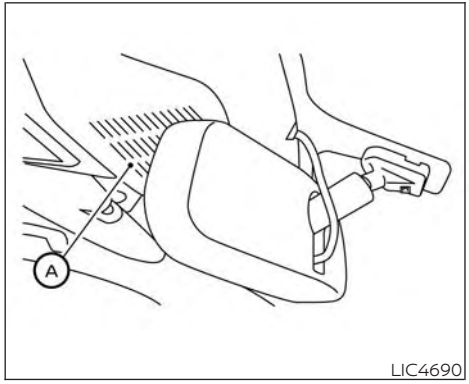

Ambient image sensor maintenance

The ambient image sensor Ⓐ for the High Beam Assist system is located in front of the inside mirror. To maintain the proper operation of the high beam assist system and prevent a system malfunction, be sure to observe the following:

- Always keep the windshield clean.
- Do not attach a sticker (including transparent material) or install an accessory near the ambient image sensor.
- Do not strike or damage the areas around the ambient image sensor. Do not touch the sensor lens that is located on the ambient image sensor.

If the ambient image sensor is damaged due to an accident, it is recommended that you visit a NISSAN dealer.

Battery saver system

If the ignition switch is placed in the OFF position while the headlight switch is in the ≡D◁≡ or 🔆 position, the headlights will turn off after a period of time.

⚠ CAUTION

Even though the battery saver feature automatically turns off the headlights after a period of time, you should turn the headlight switch to the OFF position when the engine is not running to avoid discharging the vehicle battery.

LED DAYTIME RUNNING LIGHTS (DRL) SYSTEM (Type A)

The LED portion of the headlights automatically illuminate at 100% intensity when the engine is started and the parking brake is released. The LED Daytime Running Lights (DRL) operate with the headlight switch in the OFF position. When you turn the headlight switch to the 🔆 position for full illumination, the LED lights switch from LED DRL to the park function.

If the parking brake is applied before the engine is started, the LED DRL do not illuminate. The LED DRL illuminate when the parking brake is released. The LED DRL remain on until the ignition is placed in the OFF position.

It is necessary at dusk to turn the headlight switch on for interior controls and switches to illuminate, as those remain off while the switch is in the OFF position.

⚠ WARNING

When the LED DRL system is active, tail lights on your vehicle are not on. It is necessary at dusk to turn on your headlights. Failure to do so could cause an accident injuring yourself and others.

LED DAYTIME RUNNING LIGHTS (DRL) SYSTEM (Type B)

The LED portion of the headlights automatically illuminate at 100% intensity when the engine is started. The LED Daytime Running Lights (DRL) operate with the headlight switch in the OFF position. When you turn the headlight switch to the position for full illumination, the LED lights switch from LED DRL to the park function.

If the parking brake is applied before the engine is started, the LED DRL do not illuminate. The LED DRL illuminate when the parking brake is released. The LED DRL remain on until the ignition is placed in the OFF position.

It is necessary at dusk to turn the headlight switch on for interior controls and switches to illuminate, as those remain off while the switch is in the OFF position.

⚠ WARNING

When the LED DRL system is active, tail lights on your vehicle are not on. It is necessary at dusk to turn on your headlights. Failure to do so could cause an accident injuring yourself and others.

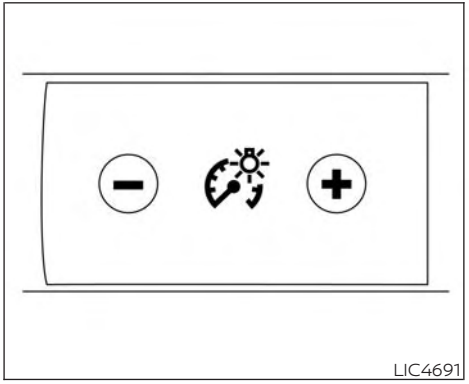
LIC4691

INSTRUMENT BRIGHTNESS CONTROL

Press the "+" button to increase the brightness of instrument panel lights.

Press the "-" button to decrease the brightness of instrument panel lights.

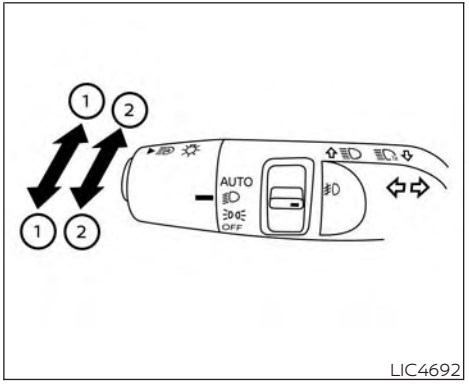

LIC4692

TURN SIGNAL SWITCH

Turn signal

① Move the lever up or down to signal the turning direction. When the turn is completed, the turn signal cancels automatically.

Lane change signal

② Move the lever up or down until the turn signal begins to flash, but the lever does not latch, to signal a lane change. Hold the lever until the lane change is completed.

Move the lever up or down until the turn signal begins to flash, but the lever does not latch, and release the lever. The turn signal will automatically flash three times.

Choose the appropriate method to signal a lane change based on road and traffic conditions.

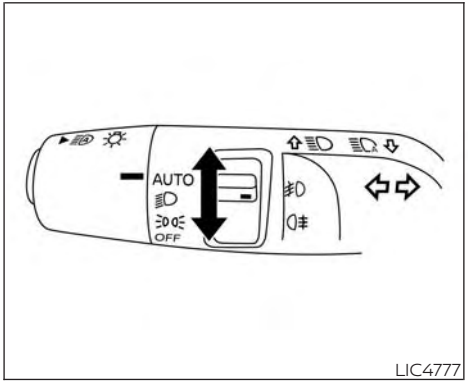

LIC4777

FRONT AND REAR FOG LIGHT (if so equipped) SWITCH

For **Type A** vehicles, to turn the front fog lights on, turn the headlight switch to the position, then turn the front fog light switch to the position. To turn the front fog lights on with the headlight switch in the AUTO position, the headlights must be on, then turn the front fog light switch to the position. The headlights must be on and the low beams selected for the fog lights to operate. The fog lights automatically turn off when the high beam headlights are selected.

For **Type B** vehicles, to turn the front fog lights on, turn the front fog light switch to the position. To turn the front fog lights on with the headlight switch in the AUTO position, turn the front fog light switch to the position.

To turn the rear fog lights on, turn the headlight switch to the position, then turn the rear fog light switch to the position.

To turn the rear fog lights on with the headlight switch in the AUTO position, the headlights must be on, then turn the rear fog light switch to the position.

To turn the fog lights off, turn the fog light switch to the OFF position (if so equipped) or turn the headlight switch to the OFF position.

HORN

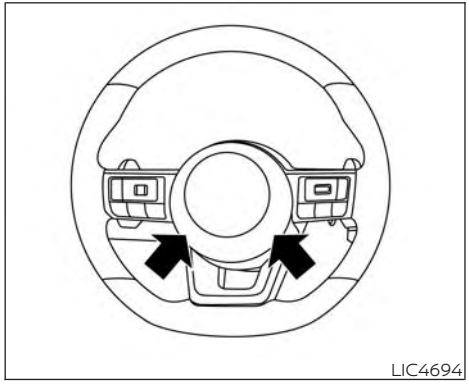
LIC4694

To sound the horn, push the center pad area of the steering wheel.

⚠ WARNING

Do not disassemble the horn. Doing so could affect proper operation of the supplemental front air bag system. Tampering with the supplemental front air bag system may result in serious personal injury.

CLIMATE CONTROLLED SEAT SWITCHES (if so equipped)

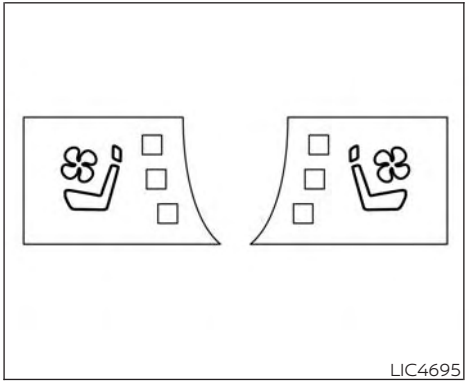
LIC4695

⚠ WARNING

Do not use or allow occupants to use the climate controlled seats if you or the occupants cannot monitor seat temperatures or have an inability to feel pain in those body parts in contact with the seat. Use of the climate controlled seats by such people could result in serious injury.

⚠ CAUTION

- **The battery could run down if the climate control seat is operated while the engine is not running.**
- **Do not use the climate control seat for extended periods or when no one is using the seat.**
- **Do not put anything on the seat which insulates heat, such as a blanket, cushion, seat cover, etc. Otherwise, the seat may become overheated.**
- **Do not place anything hard or heavy on the seat or pierce it with a pin or similar objects. This may result in damage to the climate controlled seat.**
- **Any liquid spilled on the seat should be removed immediately with a dry cloth**
- **When cleaning the seat, never use gasoline, benzine, thinner, or any similar materials.**
- **If any malfunctions are found or the climate controlled seat does not operate, turn the switch off and have the system checked. It is recommended that you visit a NISSAN dealer for this service.**

HEATED SEAT SWITCHES

The climate controlled seats cool down the front seats by ventilating air into the seats. The climate control switch is located by the air conditioning controls.

The climate controlled seat can be operated as follows:

1. Start the engine.
2. Press the switch to adjust the desired intensity. The indicator light on the switch will illuminate.
3. When the vehicle's interior is cooled, or before you leave the vehicle, be sure to press the switch to turn off the climate controlled seats. The indicator light on the switch will turn off. The climate controlled seats will retain the current settings even if the engine is restarted.

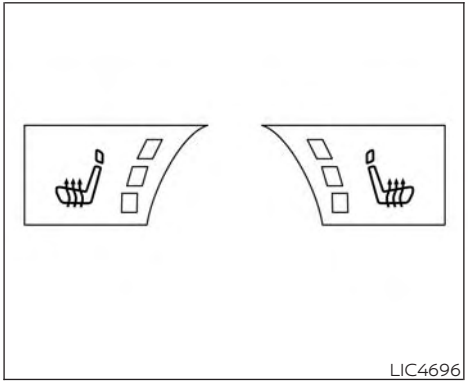
LIC4696

⚠WARNING

Do not use or allow occupants to use the seat heater if you or the occupants cannot monitor elevated seat temperatures or have an inability to feel pain in body parts that contact the seat. Use of the seat heater by such people could result in serious injury.

⚠CAUTION

- **The battery could run down if the seat heater is operated while the engine is not running.**
- **Do not use the seat heater for extended periods or when no one is using the seat.**
- **Do not put anything on the seat which insulates heat, such as a blanket, cushion, seat cover, etc. Otherwise, the seat may become overheated.**
- **Do not place anything hard or heavy on the seat or pierce it with a pin or similar object. This may result in damage to the heater.**
- **Any liquid spilled on the heated seat should be removed immediately with a dry cloth.**
- **When cleaning the seat, never use gasoline, benzine, thinner, or any similar materials.**
- **If any malfunctions are found or the heated seat does not operate, turn the switch off and have the system checked. It is recommended that you visit a NISSAN dealer for this service.**

HEATED 2ND ROW SEAT SWITCHES (if so equipped)

The front seats are warmed by built-in heaters.

1. Start the engine.
2. Push the switch, as desired. The indicator light in the switch will illuminate.

   The heater is controlled by a thermostat, automatically turning the heater on and off. The indicator light will remain on as long as the switch is on.
3. When the seat is warmed or before you leave the vehicle, be sure to push the switch to turn it off. The heated seats will retain the current settings even if the engine is restarted.

⚠ WARNING

Do not use or allow occupants to use the seat heater if you or the occupants cannot monitor elevated seat temperatures or have an inability to feel pain in body parts that contact the seat. Use of the seat heater by such people could result in serious injury.

⚠ CAUTION

- **The battery could run down if the seat heater is operated while the engine is not running.**
- **Do not use the seat heater for extended periods or when no one is using the seat.**
- **Do not put anything on the seat which insulates heat, such as a blanket, cushion, seat cover, etc. Otherwise, the seat may become overheated.**
- **Do not place anything hard or heavy on the seat or pierce it with a pin or similar object. This may result in damage to the heater.**
- **Any liquid spilled on the heated seat should be removed immediately with a dry cloth.**
- **When cleaning the seat, never use gasoline, benzine, thinner, or any similar materials.**
- **If any malfunctions are found or the heated seat does not operate, turn the switch off and have the system checked. It is recommended that you visit a NISSAN dealer for this service.**

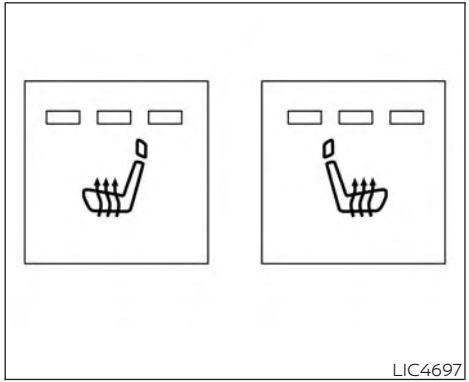
LIC4697

The 2nd row outboard seats are warmed by built-in heaters. The switches are located on the rear of the front center console and can be operated independently of each other.

1. Start the engine.
2. Push the switch, as desired. The indicator light in the switch will illuminate.

   The heater is controlled by a thermostat, automatically turning the heater on and off. The indicator light will remain on as long as the switch is on.
3. When the seat is warmed or before you leave the vehicle, be sure to turn the switch off.

STEERING ASSIST SWITCH (for vehicles with ProPILOT Assist) (if so equipped)

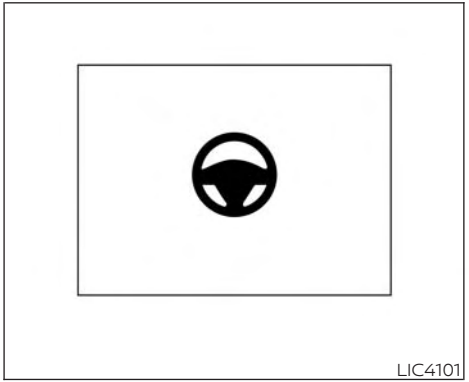
LIC4101

The Steering Assist switch is used to enable and disable the Steering Assist system that is activated using the settings menu of the vehicle information display.

The Steering Assist system controls the steering system, when ProPILOT Assist is engaged, to help keep your vehicle near the center of the lane when driving. For additional information, see "ProPILOT/ ProPILOT Assist" (P. 5-133) and "Intelligent Lane Intervention" (P. 5-46).

HILL DESCENT CONTROL SWITCH (if so equipped)


LIC4699

⚠WARNING

- **Never rely solely on the hill descent control system to control vehicle speed when driving on steep downhill grades. Always drive carefully when using the hill descent control system and decelerate the vehicle speed by depressing the brake pedal if necessary. Be especially careful when driving on frozen, muddy or extremely steep downhill roads. Failure to control vehicle speed may result in a loss of control of the vehicle and possible serious injury or death.**

- **The hill descent control may not control the vehicle speed on a hill under all load or road conditions. Always be prepared to depress the brake pedal to control vehicle speed. Failure to do so may result in a collision or serious personal injury.**

⚠ CAUTION

When the hill descent control system operates continuously for a long time, the temperature of the brake pads may increase and the hill descent control system may be temporarily disabled (the indicator light will blink). If the indicator light does not come on continuously after blinking, stop using the system.

The hill descent control system is designed to reduce driver workload when going down steep hills. The hill descent control system helps to control vehicle speed so the driver can concentrate on steering the vehicle.

To activate the hill descent control system:

- the vehicle speed must be under 25 km/h (15 mph)
- the hill descent control system switch must be ON.

The hill descent control system ON indicator light will come on when the system is activated. Also, the stop/tail lights illuminate while the hill descent control system applies the brakes to control vehicle speed.

If the accelerator or brake pedal is depressed while the hill descent control system is on, the system will stop operating temporarily. As soon as the accelerator or brake pedal is released, the hill descent control system begins to function again if the hill descent control operating conditions are fulfilled.

The hill descent control system ON indicator light blinks if the switch is on and all conditions for system activation are not met or if the system becomes disengaged for any reason.

To turn off the hill descent control system, push the switch to the OFF position.

For additional information, see "Hill descent control system ON indicator light" (P. 2-18) or "Hill descent control system" (P. 5-236).

WARNING SYSTEMS SWITCH (for vehicles without ProPILOT Assist) (if so equipped)

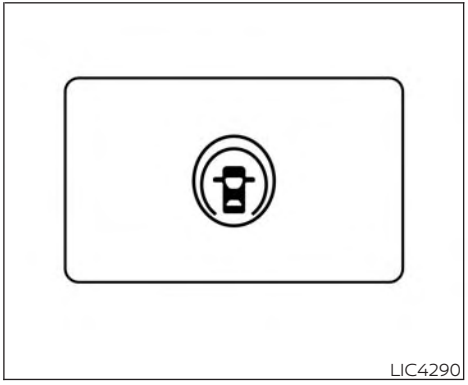

LIC4290

⚠ WARNING

When this switch is activated the following Warning Systems (if so equipped) are turned off and will not work.

- **Blind Spot Warning (BSW)**
- **Lane Departure Warning (LDW)**
- **Rear Cross Traffic Alert (RCTA)**

The warning systems switch is used to turn on and off the warning systems (Lane Departure Warning [LDW], Blind Spot Warning [BSW], and Rear Cross Traffic Alert [RCTA])

that are activated (if equipped) using the settings menu on the vehicle information display.

The LDW system warns the driver with a warning light and chime that the vehicle is beginning to leave the driving lane. For additional information, see "Lane Departure Warning (LDW)" (P. 5-39).

The BSW system will turn on the side indicator light, located next to the outside mirrors, if the radar detects a vehicle in the detection zone. If the turn signal is activated in the direction of the detected vehicle, a chime sounds twice and the side indicator light will flash. For additional information, see "Blind Spot Warning (BSW)" (P. 5-64).

The RCTA system can help alert the driver of an approaching vehicle when the driver is backing out of a parking space. If the system detects an approaching vehicle from either side, the system chimes (once) and the side BSW/RCTA indicator light flashes on the side the vehicle is approaching from. For additional information, see "Rear Cross Traffic Alert (RCTA)" (P. 5-90).

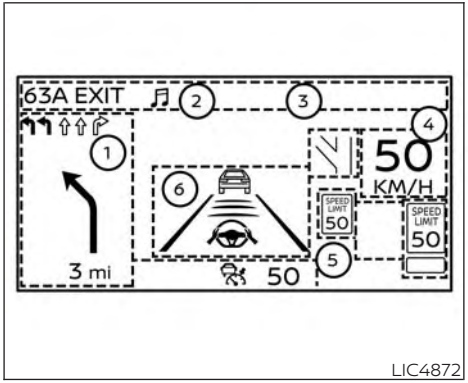

LIC4872

⚠WARNING

- **Failure to properly adjust the brightness and position of the displayed image may interfere with the drivers ability to see through the windshield which could cause an accident leading to severe injury or death.**
- **Do not use the head up display for extended periods of time as that can cause you to not see other vehicles, pedestrians or objects, which could cause an accident leading to severe injury or death.**

The HUD can display one or more of the following features (if so equipped):

① Navigation/Warning
② Audio
③ TEL/SMS or Telephone
④ Vehicle speed display
⑤ Traffic Sign Recognition
⑥ Driving Aids

NOTE:

- **Do not place any type of liquid on or near the projector. Doing so may cause malfunction of the equipment.**

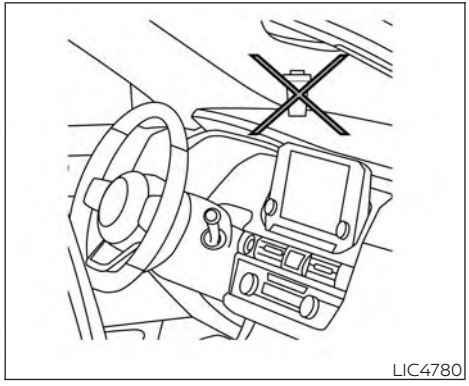
LIC4780

NOTE:

- **Do not touch any internal parts of the projector. Doing so may cause malfunction of the equipment.**
- **To prevent scratches to the projector glass, do not place any sharp objects on or near the projector opening.**
- **Do not place any objects on the instrument panel which may obstruct the display of the HUD.**
- **If you wear polarized sunglasses the display may be difficult to see. Increase the brightness of the HUD in the vehicle information display or remove your sunglasses.**
- **Depending on weather conditions (rain, snow, sunlight, etc.), the display may be difficult to see.**
- **For cleaning, use a soft clean dry cloth. If it cannot be removed, use a soft clean cloth, dampened with water. After that, please use a soft clean cloth. Never use a rough cloth, alcohol, benzine, thinner or any kind of solvent or paper towel with a chemical cleaning agent. They will scratch or cause discoloration to the projector lens. Do not spray any liquid such as water on the projector lens. Spraying liquid may cause the system to malfunction.**
- **If the displayed image appears distorted, it is recommended that you have the system checked by a NISSAN dealer or qualified workshop.**
- **The HUD has a special windshield to allow the image to be displayed clearly. If your windshield needs replacing, this should be completed by a NISSAN dealer.**

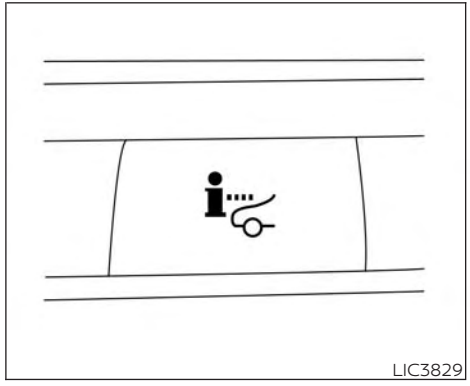
LIC3829

HOW TO USE THE HUD

To turn the HUD on, push the HUD switch. To turn the HUD off, push the switch again.

If the HUD is turned off, it will remain off even if the vehicle is restarted.

The following settings can be changed in the vehicle information display:

- Brightness
- Height
- Rotation

- Contents Selection
  - Navigation
  - Driving Assist
  - Speed Limit Sign
  - Audio
  - TEL/SMS or Telephone
- Reset

NOTE:

Emergency information may display even if the HUD is turned off.

This product includes the following software.

(1) Panasonic Corporation or software developed for Panasonic Corporation

(2) Third-party software licensed to Panasonic Corporation

(3) Open source software

Regarding (3) Open source software, it includes open source software (OSS), including various software to which license information applies.

Refer to the license web site at:
http://car.panasonic.jp/oss/i02lln39.

DRIVER ASSISTANCE/NAVIGATION LINKING

The HUD will display driver assistance and navigation information.

The driver assistance display will show warning situations for the following systems:

- Intelligent Emergency Braking with Pedestrian Detection (if so equipped)
- Intelligent Emergency Braking (if so equipped)
- Lane Departure Warning (LDW)
- Intelligent Forward Collision Warning
- Hands-free warning (for vehicles with ProPILOT Assist) (if so equipped)
- Traffic Sign Recognition (TSR) (if so equipped)

The Navigation System linking display will show the following items:

- Intersection names
- Arrows indicating turning direction
- Distance to the next intersection

The Audio System linking display will show the following items:

- Songs
- Radio stations

The TEL/SMS or Telephone linking display will show the following items:

- Caller's name or phone number

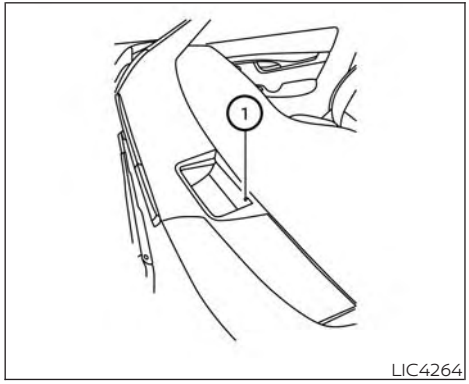

Display brightness

The brightness of the display may be controlled by the vehicle information display. The brightness will also be adjusted automatically according to the exterior ambient lighting brightness.

NOTE:

- **A sensor ① is built into the Head Up Display to control the brightness of the image. Make sure the sensor is clear of obstructions or the display may become dark and difficult to recognize.**
- **Do not apply strong light to the sensor of the Head Up Display. Doing so may cause a malfunction.**

EMERGENCY CALL (SOS) BUTTON (Type A) (if so equipped)

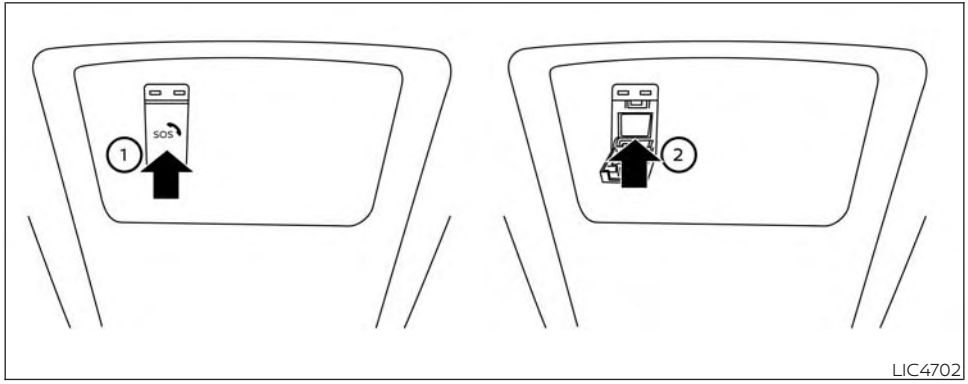

The Emergency call (SOS) button is used in combination with a NissanConnect® Services subscription to call for assistance in case of an emergency.

The Emergency call button ① is under a cover. Press the cover once. The cover will drop down, exposing the Emergency call button.

Pressing the button ② will (with a paid subscription) reach a response specialist that will provide assistance based on the situation described by the vehicle's occupant. For additional information, or to enroll your vehicle, refer to www.NissanUSA.com/connect or www.Nissan.com.mx/nissan-connect.html or call 855-426-6628 or 800-964-7726.

⚠ WARNING

- **Please note that the Automatic Collision Notification service and Emergency Call function cannot be used in the following conditions:**
  - **Emergency functions and services will not be available without a paid subscription to NissanConnect® Services.**
  - **The NissanConnect® Services network system is disabled.**
  - **The vehicle moves outside the service area where the TCU (Telematics Control Unit) is connected to the system.**
  - **The vehicle is outside the area where the cellular network service is receivable.**
  - **The vehicle is in a location with poor signal reception such as tunnels, underground parking garages, behind buildings or in mountainous areas.**
  - **The line is busy.**
  - **The TCU (Telematics Control Unit) or other systems of your vehicle are not working properly.**

- **It may not be possible to make an emergency call depending on the severity of a collision and/or emergency.**

- **Park the vehicle in a safe location and set the parking brake before operating the Emergency Call (SOS) button.**
- **Only use this service in case of an emergency. There may be a penalty for inappropriate use of the service.**
- **Radio waves could adversely affect electric medical equipment. Individuals who use a pacemaker should contact the device manufacturer regarding any possible effects before using the system.**
- **The TCU (Telematics Control Unit) antenna is installed in the upper central part of the instrument panel. An occupant should not get any closer to the antenna than specified by the pacemaker manufacturer. The radio waves from the TCU antenna may adversely affect the operation of the pacemaker while using the NissanConnect® Services.**

EMERGENCY SERVICES CALL ECALL/SOS SYSTEM (Type B) (if so equipped)

Your vehicle is equipped with the 999-based in-vehicle emergency services call system (eCall). In the event of a serious road accident emergency, an automatic call can be made to the emergency services operator. The system can also be used manually to call the emergency services operator. The 999-based eCall service is a public service of general interest and is accessible free of charge. NISSAN is responsible only for the emergency communication system technical performance in the event of an accident within the warranty period. The 999-based eCall service can be used only in countries which have emergency services operator.

⚠WARNING

- **Radio waves could adversely affect electric medical equipment. Individuals who use a pacemaker should contact the device manufacturer regarding any possible effects before using the system.**
- **The TCU (Telematics Control Unit) antenna is installed inside the upper central part of the instrument panel. An occupant should not get any closer to the antenna than specified by the pacemaker manufacturer. The radio waves from the TCU (Telematics Control Unit) antenna may adversely affect the operation of the pacemaker.**
- **Inappropriate use of the service may be a violation of local laws and result in a criminal penalty.**

AUTOMATIC EMERGENCY CALL

If the air bag control unit detects a frontal collision, side collision or rear collision (if so equipped) the system automatically places an emergency call to the emergency call center. At the same time, the vehicle information is also transferred. Once an emergency call is received by the emergency call center, the operator tries to talk to the vehicle's occupant.

NOTE:

- **During the emergency call, the volume of the voice of the operator cannot be adjusted.**
- **During the emergency call, the volume of the vehicle audio will be muted.**

The eCall system is always enabled by default. It is activated automatically by means of in-vehicle sensors in the event of a severe accident.

The eCall system is not traceable and is not subject to any constant tracking in its normal operational status. Data in the internal memory of the system is not available outside the in-vehicle system to any entities before the eCall is triggered.

Any processing of personal data through the 999-based eCall in-vehicle system shall comply with the personal data protection rules provided for in Directives 95/46/EC and 2002/58/EC of the European Parliament and of the Council, and in particular, shall be based on the necessity to protect the vital interests of the individuals in accordance with Article 7(d) of Directive 95/46/EC.

Processing of such data is strictly limited to the purpose of handling the emergency eCall to emergency number 999. Recipients of data processed by the 999-based eCall in-vehicle system are the relevant public safety answering points designated by the respective public authorities of the country on which territory they are located, to first receive and handle eCalls to the emergency number 999.

The following information will be sent to the emergency call center by the vehicle emergency call system if a collision occurs:

- Vehicle Identification Number (VIN)
- Vehicle type
- Fuel type
- Activation type (Automatic/Manual)
- Call type (Test/Emergency)
- Position (Trusted/Low confidence)
- Time stamp (when the collision or event occurred)
- Last three vehicle locations, and vehicle direction
- Number of passengers (if equipped)

The 999-based eCall in-vehicle system is designed in such a way as to ensure that data in the system internal memory is automatically and continuously removed.

The vehicle location data is constantly overwritten in the internal memory of the system so as always to keep maximum of the last three up-to-date locations of the vehicle necessary for the normal functioning of the system.

The log of activity data in the 999-based eCall in-vehicle system is kept for no longer than necessary for attaining the purpose of handling the emergency eCall and in any case not beyond 13 hours from the moment an emergency eCall was initiated.

⚠ CAUTION

- **The automatic emergency call will only be triggered if the vehicle air bag system is activated during the collision.**
- **If the automatic emergency call has been triggered, bring your vehicle to a NISSAN dealer. This is necessary because the automatic emergency call system needs to be reset to avoid any unintended eCall being made.**
- **The mobile network provider that manages the connection from the vehicle to the emergency call center is specified and controlled outside of the vehicle emergency call system.**
- **Within the first minute of any emergency call the operator will determine if the call is genuine. Should the operator determine it is a nongenuine call they will stop the call, making no further attempts to call the vehicle back. This action does not prevent the occupant(s) of the vehicle from making a further manual emergency call.**

The emergency call function cannot be used in the following conditions:

- **The vehicle is outside the area where mobile network service is receivable.**
- **The vehicle is in a location with poor signal reception such as tunnels, underground parking garages, behind buildings, or in mountainous areas.**
- **The TCU (Telematics Control Unit) or other systems of your vehicle are not working properly.**
- **The available mobile network provider at the location of the vehicle is not specified for emergency call usage.**
- **The communication line of the emergency call center is busy.**

The Rear Door Alert system functions under certain conditions to indicate there may be an object or passenger in the rear seat(s). Check the seat(s) before exiting the vehicle.

The Rear Door Alert system is initially disabled. The driver can enable the system using the vehicle information display. For additional information, see "Vehicle information display–7 inch (18 cm) Type A" (P. 2-24) or "Vehicle information display—12.3 inch (31 cm) Type B" (P. 2-49).

When the system is enabled:

- The system is activated when a rear door is opened and closed within 10 minutes of the vehicle being driven. When the driver door is closed and the system is activated, a visual message appears in the vehicle information display. For additional information, see "Rear Door Alert is activated" (P. 2-41 or 2-67).
- If a rear door is opened and closed but the vehicle is not driven within approximately 10 minutes, the system will not be activated. A rear door must be opened and closed and the car driven within 10 minutes for the system to activate.

When the Rear Door Alert system is activated:

- When the driver puts the vehicle in the P (Park) position, a notification message appears in the vehicle information display with the options to "Dismiss Message" or "Disable Alert" if desired.
  - Select "Disable Alert" to temporarily disable for that stop.
  - No selection or 'Dismiss Message" will keep the alert enabled for that stop.
- If the alert is enabled when a driver exits the vehicle, a message will appear in the vehicle information display that states "Check Back Seat For All Articles."

  If "Horn & Alert" setting is selected:
  - An audible horn sound will occur after a short time unless a rear door is opened and closed within a short time to deactivate the alert.
  - If the doors are locked before the alert is deactivated by opening a rear door, the horn will sound.
  - If the liftgate is opened before a rear door is opened, the horn will be delayed until after the liftgate is closed.

NOTE:

If "Alert Only" setting is selected, the message alert will still be shown in the vehicle information display but the horn will not sound.

⚠ WARNING

- **If the driver selects "Disable Alert", no audible alert will be provided regardless of rear door open/close status.**
- **There may be times when there is an object or passenger in the rear seat(s) but the audible alert does not sound. For example, this may occur if rear seat passengers enter or exit the vehicle during a trip.**
- **The system does not directly detect objects or passengers in the rear seat(s). Instead, it can detect when a rear door is opened and closed, indicating that there may be something in the rear seat(s).**

NOTE:

There may be times when the horn sounds but there are no objects or passengers in the rear seat(s).

For additional information, see "Rear Door Alert is activated" (P. 2-41 or 2-67).

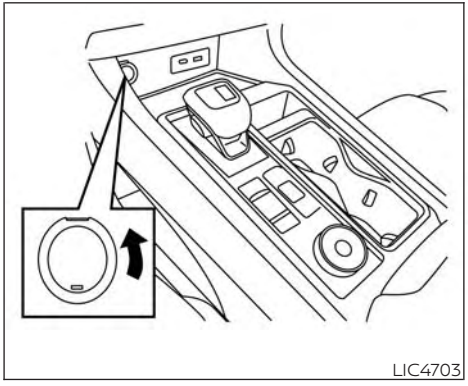

Instrument Panel

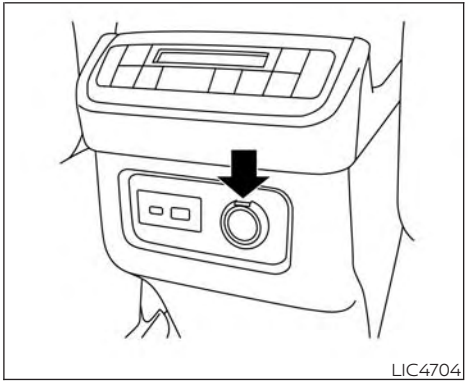

Center Console (if so equipped)

12V OUTLETS

The power outlets are for powering electrical accessories such as cellular telephones. They are rated at 12 volt, 120W (10A) maximum.

The instrument panel and center console power outlets are powered only when the ignition switch is in the ON position.

⚠ CAUTION

- **The outlet and plug may be hot during or immediately after use.**
- **Only certain power outlets are designed for use with a cigarette lighter unit. Do not use any other power outlet for an accessory lighter. It is recommended that you visit a NISSAN dealer for additional information.**
- **Do not use with accessories that exceed a 12 volt, 120W (10A) power draw.**

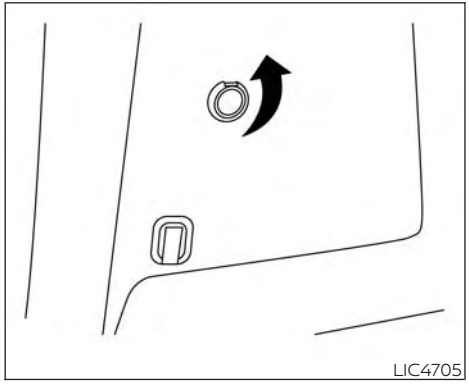

Cargo Area (if so equipped)

- **Do not use double adapters or more than one electrical accessory.**
- **Use power outlets with the engine running to avoid discharging the vehicle battery.**
- **Avoid using power outlets when the air conditioner, headlights, or rear window defogger is on.**
- **Before inserting or disconnecting a plug, be sure the electrical accessory being used is turned off.**
- **Push the plug in as far as it will go. If good contact is not made, the plug may overheat or the internal temperature fuse may open.**
- **When not in use, be sure to close the cap. Do not allow water or any other liquid to contact the outlet.**

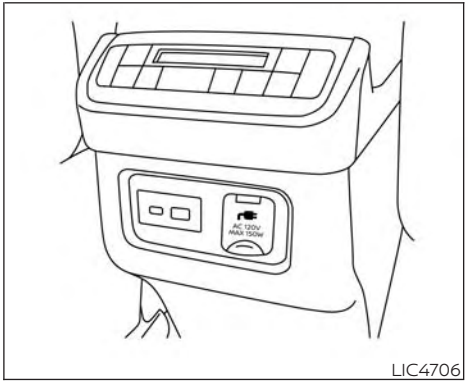

2nd Row

120V OUTLET (if so equipped)

⚠ CAUTION

- **The outlet and plug may be hot during or immediately after use.**
- **Use power outlets with the engine running to avoid discharging the vehicle battery.**
- **Do not use accessories that exceed a 120V, 150W power draw. Do not use double adaptors or more than one electrical accessory.**

- **Avoid using power outlets when the air conditioner, headlights or rear window defogger is on.**
- **Before inserting or disconnecting a plug, be sure the electrical accessory being used is turned OFF.**
- **Push the plug in as far as it will go. If good contact is not made, the plug may overheat or the internal temperature fuse may open.**
- **When not in use, be sure to close the cap. Do not allow water or any other liquid to contact the outlet.**

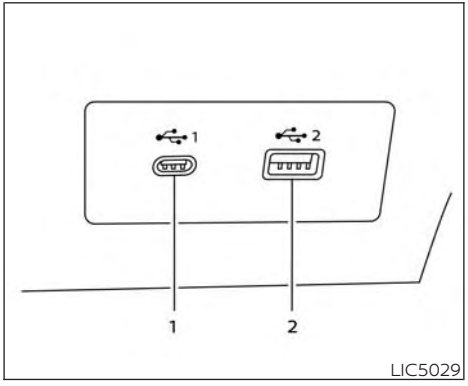

1st row

1. Type-C USB
2. Type-A USB

There are USB/iPod® charging ports located in 1st row in the front media pocket below the climate controls, in the 2nd row on the back of the center console and in the 3rd row (if so equipped) by the cup holders. These ports will charge compatible devices.

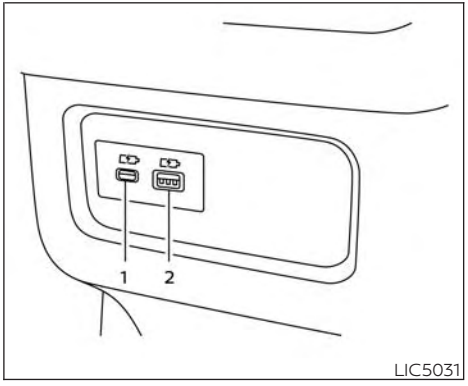

2nd row

NOTE:

- **Not all of the USB/iPod® charging ports will operate with the display screen. Only the USB connection ports located under the climate controls will allow operation of USB/iPod® devices through the audio system.**
- **For best results, it is recommended to use the manufacturer cables, which are sold separately. A USB Type-A to USB Type-C adapter (or vice versa) can also be purchased separately; however, results may vary.**

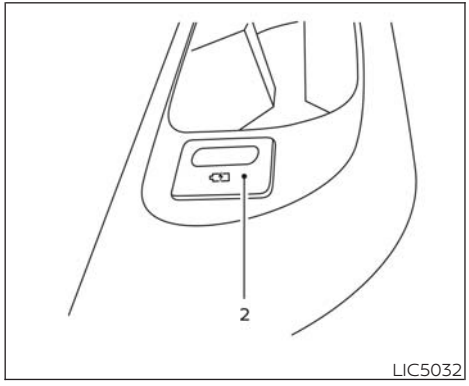

3rd row (if so equipped)

⚠CAUTION

- **Do not force a USB device into the connector. Inserting the USB device tilted or up-side down into the connector may damage the connector. Make sure that the USB device is connected correctly into the connector.**
- **Do not use a reversible USB cable. Using the reversible USB cable may damage the connector.**

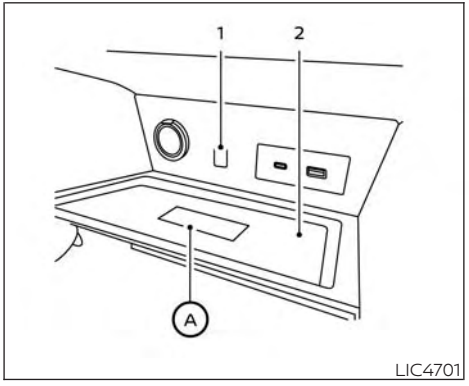

1. Indicator
2. Charging pad

The wireless charger is located on the front of the center console. Lay the smartphone on the pad of the wireless charger. Charging will start automatically. The smartphone will be charged continuously while the ignition switch is in the ON position.

⚠WARNING

- **Never put metallic materials between the wireless charger and a smartphone.**
- **Those who use a pacemaker or other medical equipment should contact the electric medical equipment manufacturer for the possible influences before use.**
- **Never put cloth over the smartphone during charging process.**
- **Never charge a smartphone when it is wet.**
- **Never put metallic materials or small goods such as a cigarette lighter, Intelligent Key or memory drive.**

⚠CAUTION

- **Do not put an RFID/NFC/credit card between the wireless charger and a smartphone. This could cause data corruption in the card.**
- **Do not use the wireless charger with dust accumulated or dirt on the pad.**
- **Do not hit the surface of the wireless charger.**
- **Do not spill liquid (water, drinks, etc.) on the charging pad.**
- **Do not use grease, oil or alcohol for cleaning charging pad.**

WIRELESS CHARGER INDICATOR

The indicator (1) will illuminate in orange when the charging process is started.

When the charging has completed, the indicator illuminates in green.

If a malfunction occurs or the charging process has stopped, the indicator will blink in orange for 8 seconds then turn off.

WIRELESS CHARGER OPERATION

To use the wireless charger, it is necessary to seat the smartphone well within the charging pad. To maximize charging performance, ensure the smartphone is fully seated on the center of the charging pad over the "Qi" logo Ⓐ. Because the location of the power receiver may vary depending on the smartphone, you will need to try and find the area that suits your smartphone.

Because some smartphone cases or accessories may adversely affect charging, remove them before wireless charging. Turn off the vibration function of the smartphone before wireless charging.

NOTE:

- **Only a Qi compatible smartphone can be used.**
- **The smartphone may be warmed during charging process and the charging may stop by the protection function of the wireless charger. This is not a malfunction. If this occurs, restart charging after the smartphone cooled down. The indicator will blink in orange then turn off.**
- **The wireless charging process may be stopped by the status of the smartphone (battery temperature, etc.).**
- **If a radio noise interference occurs during charging process, put the smartphone onto the center ("Qi" logo) position of the wireless charger.**
- **The wireless charging process will stop during process of searching the Intelligent Key.**
- **The wireless charging process will not be started when a USB (Universal Serial Bus) cable is connected to the smartphone. The indicator may illuminate in orange or blink if the smartphone is put on the wireless charger with a USB cable connected. However, charging is not performed.**
- **Depending on the type of the smartphone, the indicator may remain illuminated in orange even when the charging process has been completed.**

FCC ID: BEJWC500MNM
IC: 2703H-WC500MNM
This device complies with part 15 of the FCC Rules and RSS-Gen of IC Rules.
Operation is subject to the following two conditions:
(1) This device may not cause harmful interference, and
(2) This device must accept any interference received, including interference that may cause undesired operation.
Changes or modifications not expressly approved by the party responsible for compliance could void the user's authority to operate the equipment.
RF Radiation Exposure Statement: This equipment complies with FCC RF Radiation exposure limits set forth for an uncontrolled environment.
This device and its antenna must not be co-located or operating in conjunction with any other antenna or transmitter.
This equipment should be installed and operated with a minimum distance of 15cm between the radiator and your body.

EXTENDED STORAGE SWITCH

ISED Compliance Statement
This device complies with RSS-Gen of IC Rules
Operation is subject to the following two conditions:
(1) This device may not cause harmful interference, and
(2) This device must accept any interference received, including interference that may cause undesired operation.
Changes or modifications made to this device, not expressly approved by LG Vehicle Components Company, will void the user's authority to operate the equipment.
ISED RF Radiation Exposure Statement: This equipment complies with ISED RF Radiation exposure limits set forth for an uncontrolled environment. This device and its antenna must not be co-located or operating in conjunction with any other antenna or transmitter. This equipment should be installed to operate with a minimum distance of 15 cm between the radiator and the end-user's body and arms.

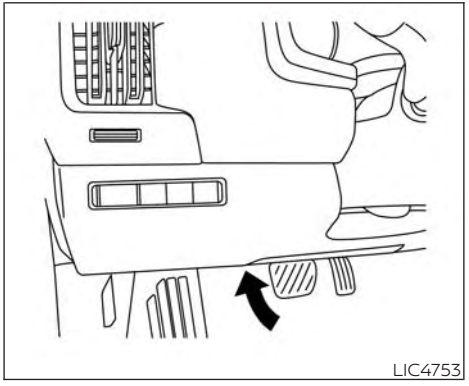
LIC4753

The extended storage switch is used when the vehicle is in transit from the factory. It is located above the brake pedal underneath the instrument panel. If any electrical equipment does not operate, ensure the extended storage switch is pushed fully in place, as shown.

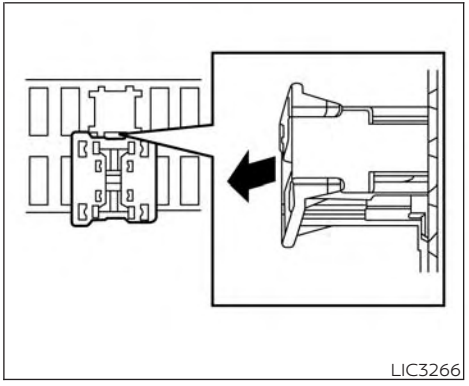
LIC3266

Pulled position

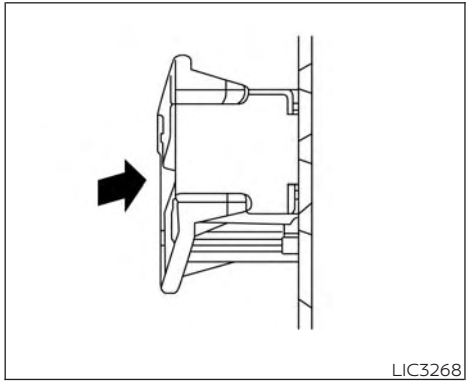

Pushed position

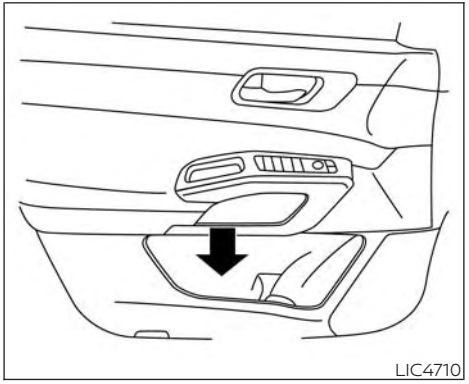

FRONT-DOOR POCKETS

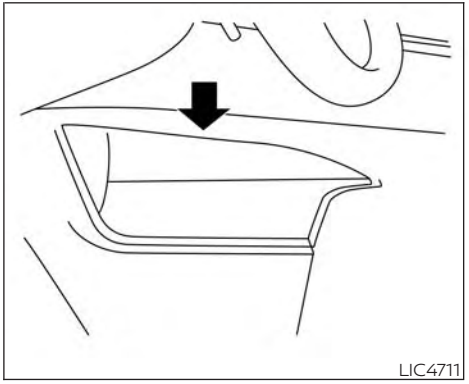

LOWER CONSOLE STORAGE TRAY

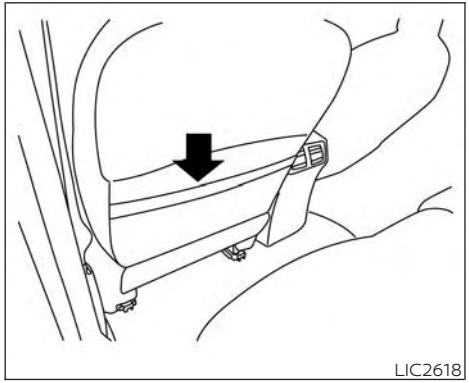

SEATBACK POCKETS

There is one seatback pocket located on the back of the driver and passenger seats. The pockets can be used to store maps.

⚠WARNING

To ensure proper operation of the driver's and/or front passenger's NISSAN Advanced Air Bag System (if so equipped), please observe the following items:

- **Do not allow a passenger in the rear seat or 2nd row to push or pull on the seatback pocket or head restraint.**
- **Do not place heavy loads heavier than 4 kg (9.1 lbs.) on the seatback, head restraint or in the seatback pocket.**

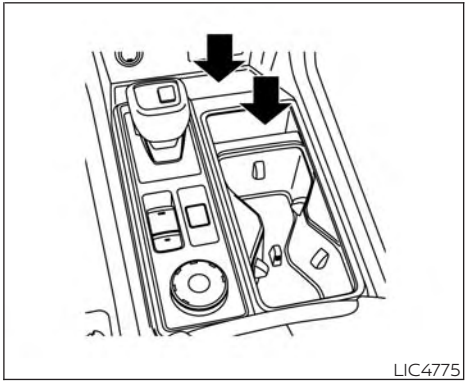

Front console

STORAGE TRAYS

⚠WARNING

Do not place sharp objects in the trays to help prevent injury in an accident or sudden stop.

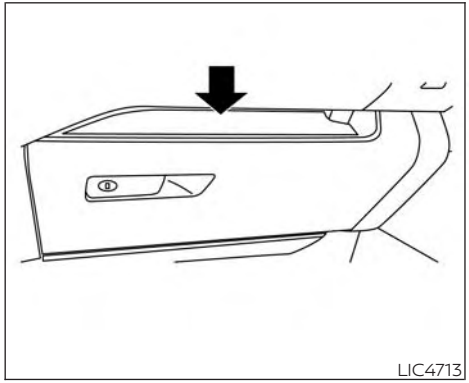

Passenger side

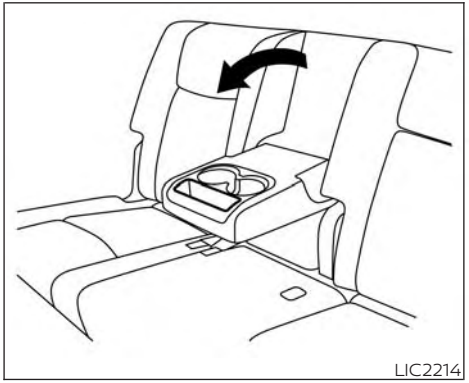

Rear armrest (if so equipped)

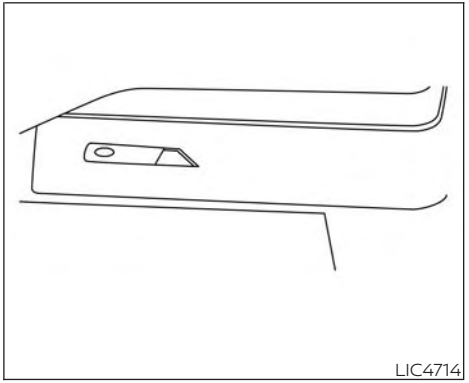

GLOVE BOX

Open the glove box by pulling the handle. Use the mechanical key when locking or unlocking the glove box.

⚠WARNING

Keep the glove box lid closed while driving to help prevent injury in an accident or a sudden stop.

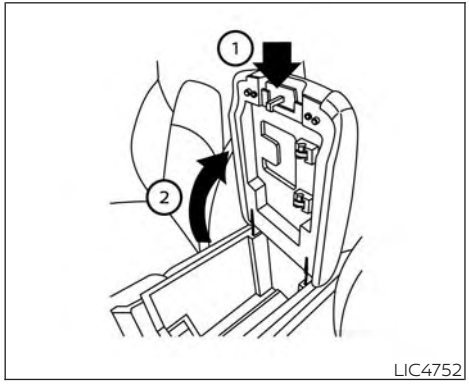

CONSOLE BOX

To open the console box, pull the lever up ① and raise the lid ②.

To close, push the lid down until the lock latches.

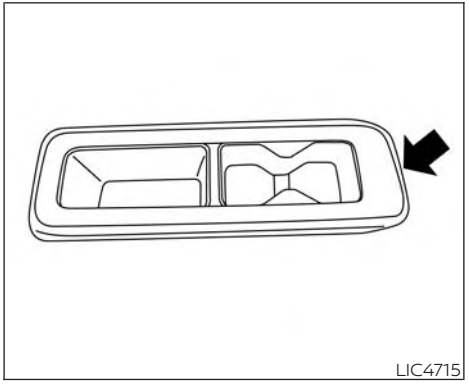

2ND ROW CONSOLE (if so equipped)

The 2nd row console is removable. In order to remove, locate the front panel opening at the front of the center console.

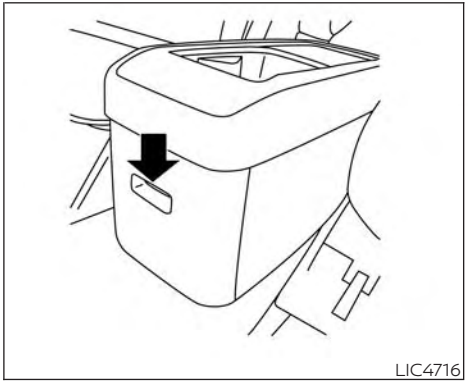

Remove the front panel of the center console.

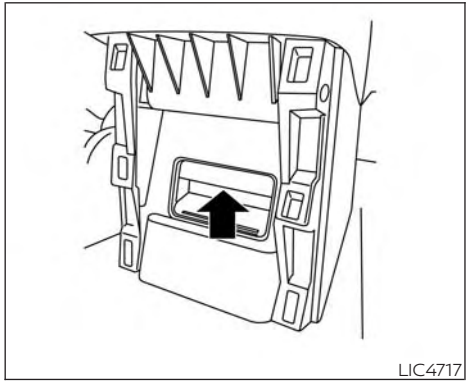
LIC4717

Pull up on the lever and lift up to remove center console.

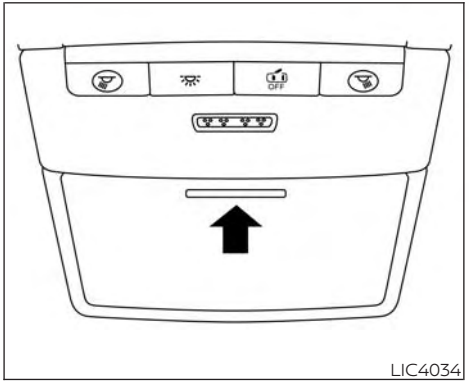
LIC4034

OVERHEAD SUNGLASSES STORAGE

To open the sunglasses holder, push and release.

Only store one pair of sunglasses in the holder.

⚠ WARNING

Keep the sunglasses holder closed while driving to avoid obstructing the driver's view and to help prevent an accident.

⚠ CAUTION

- **Do not use for anything other than sunglasses.**
- **Do not leave sunglasses in the sunglasses holder while parking in direct sunlight. The heat may damage the sunglasses.**

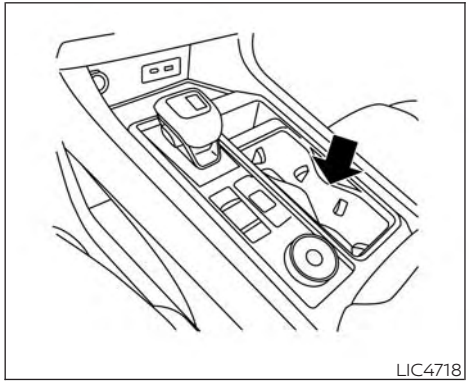

Front console

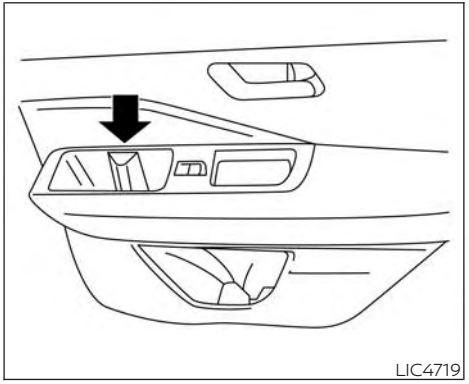

Rear door

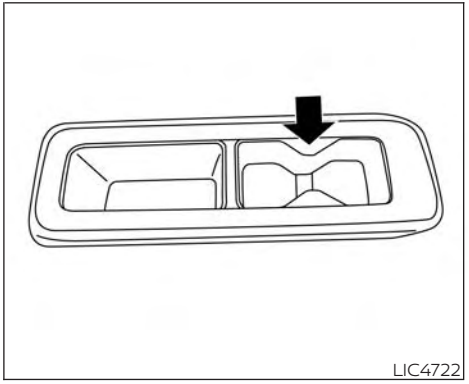

2nd row (if so equipped)

CUP HOLDERS

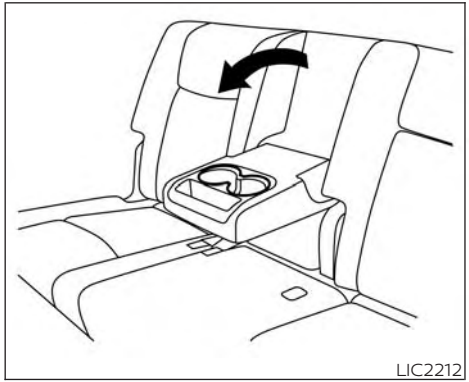

2nd row (if so equipped)

⚠ CAUTION

Do not recline the rear seatback when you use the cup holders on the rear armrest. Doing so may cause the beverages to spill over, and if they are hot, they may scald the passengers.

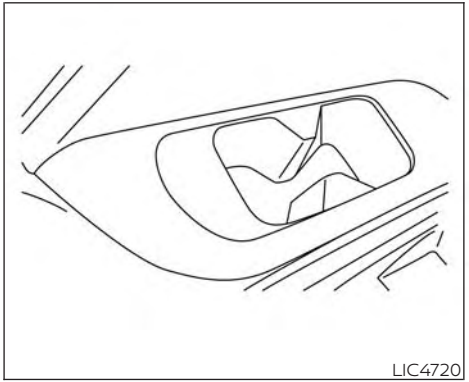

3rd row

⚠ CAUTION

Avoid abrupt starting and braking when the cup holder is being used to prevent spilling the drink. If the liquid is hot, it can scald you or your passenger.

⚠ CAUTION

Use only soft cups in the cup holder. Hard objects can injure you in an accident.

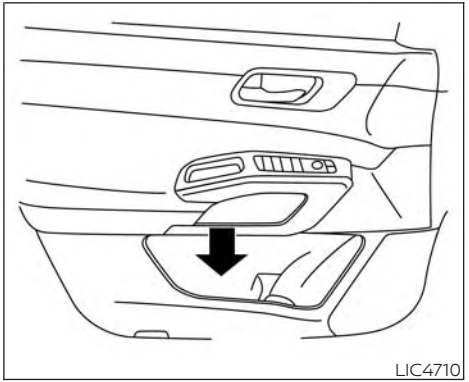

Bottle holder — front

⚠ CAUTION

- **Do not use the bottle holder for any other objects that could be thrown about in the vehicle and possibly injure people during sudden braking or an accident.**
- **Do not use the bottle holder for open liquid containers.**

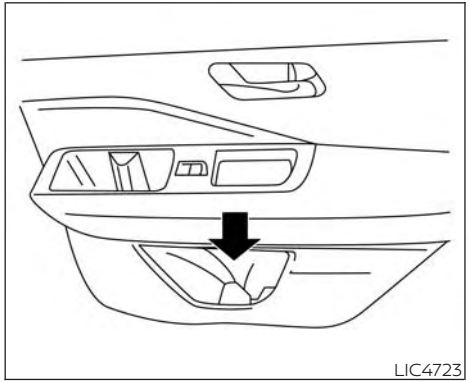

Bottle holder — rear

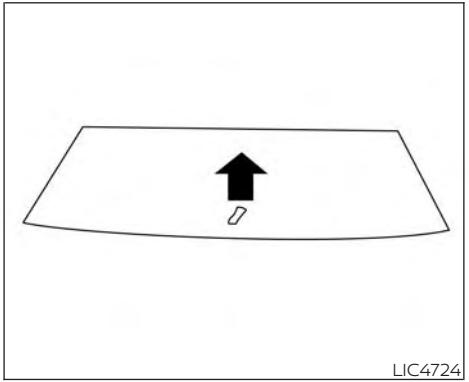

CARGO AREA STORAGE BIN

To access the floor storage area pull up on the strap to lift the luggage board.

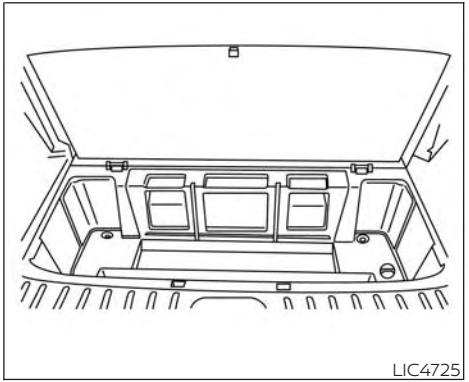

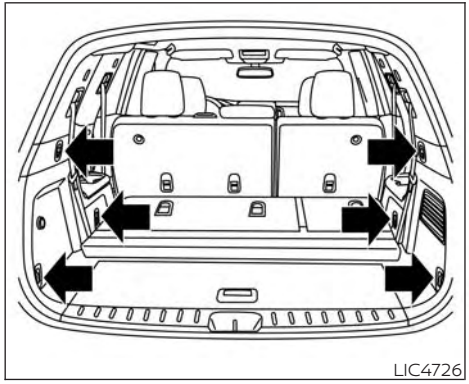
LIC4726

LUGGAGE HOOKS

When securing items using luggage hooks located on the upper side finisher do not apply a load over more than 6.5 lbs. (29 N) to a single hook.

The cargo hooks that are located closer to the floor should have loads less than 110 lbs. (490 N) to a single hook.

The cargo hooks can be used to secure cargo with ropes or other types of straps.

⚠WARNING

- **Properly secure all cargo with ropes or straps to help prevent it from sliding or shifting. Do not place cargo higher than the seatbacks. In a sudden stop or collision, unsecured cargo could cause personal injury.**
- **Use suitable ropes and hooks to secure cargo.**
- **Never allow anyone to ride in the luggage area. It is extremely dangerous to ride in a cargo area inside of a vehicle. In a collision, people riding in these areas are more likely to be seriously injured or killed.**
- **Do not allow people to ride in any area of your vehicle that is not equipped with seats and seat belts.**
- **The child restraint top tether strap may be damaged by contact with items in the cargo area. Secure any items in the cargo area. Your child could be seriously injured or killed in a collision if the top tether strap is damaged.**
- **Be sure everyone in your vehicle is in a seat and using a seat belt properly.**

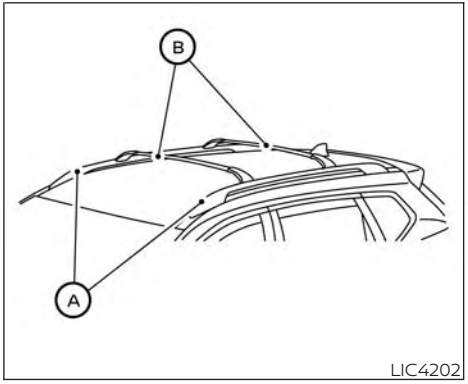

LIC4202

ROOF RACK (if so equipped)

⚠WARNING

- **Always install the crossbars onto the roof side rails before loading cargo of any kind. Loading cargo directly onto the roof side rails or the vehicle's roof may cause vehicle damage.**
- **Roof rack cross bars should be evenly distributed.**
- **Do not exceed maximum roof rack crossbars load capacity and always distribute the load uniformly.**

- **Heavy loading of the crossbars has the potential to affect the vehicle stability and handling during sudden or unusual handling maneuvers.**
- **Properly secure all cargo with ropes or straps to help prevent it from sliding or shifting. In a sudden stop or collision, unsecured cargo could cause personal injury.**
- **Drive extra carefully when the vehicle is loaded at or near the cargo carrying capacity, especially if the significant portion of that load is carried on the crossbars.**

⚠CAUTION

- **Use care when placing or removing items from the roof rack. If you cannot comfortably lift the items onto the roof rack from the ground, use a ladder or a stool.**

Do not apply any load directly to the roof side rails Ⓐ. Crossbars Ⓑ must be installed before applying load/cargo/luggage to the roof of the vehicle.

Genuine NISSAN accessory crossbars may be available through a NISSAN dealer. It is recommended that you visit a NISSAN dealer for additional information.

The service load capacity for the roof side rails is 74 kg. (165 lbs.), however do not exceed the crossbars load capacity.

Be careful that your vehicle does not exceed the Gross Vehicle Weight Rating (GVWR) or its Gross Axle Weight Rating (GAWR front and rear).

For additional information regarding GVWR and GAWR, see:

- "Vehicle loading information" (P. 9-14) or "Dimensions and weights" table (P. 9-9).

POWER WINDOWS

⚠WARNING

- **Make sure that all passengers have their hands, etc., inside the vehicle while it is in motion and before closing the windows. Use the window lock switch to prevent unexpected use of the power windows.**
- **To help avoid risk of injury or death through unintended operation of the vehicle and/or its systems, including entrapment in windows or inadvertent door lock activation, do not leave children, people who require the assistance of others or pets unattended in your vehicle. Additionally, the temperature inside a closed vehicle on a warm day can quickly become high enough to cause a significant risk of injury or death to people and pets.**

The power windows operate when the ignition switch is placed in the ON position or for a period of time after the ignition switch is placed in the OFF position. If the driver's or passenger's door is opened during this period of time, the power to the windows is canceled.

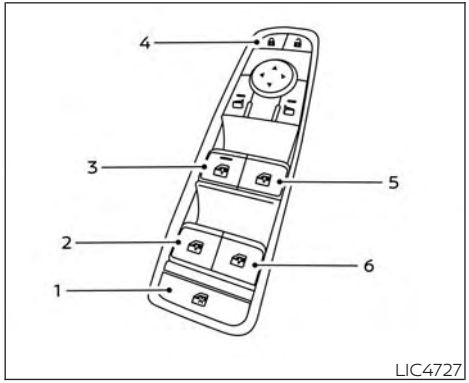

1. Window lock button
2. Left rear passenger side switch
3. Driver's side switch
4. Power door lock/unlock switch
5. Front passenger side switch
6. Right rear passenger side switch

Driver's side power window switch

The driver's side control panel is equipped with switches to open or close all of the windows.

To open a window, push the switch to the detent and continue to hold down until the desired window position is reached. To close a window, pull the switch to the detent and continue to hold up until the desired window position is reached.

Locking passengers' windows

When the window lock switch is depressed, only the driver's side window can be opened or closed. Push it again to cancel the window lock function.

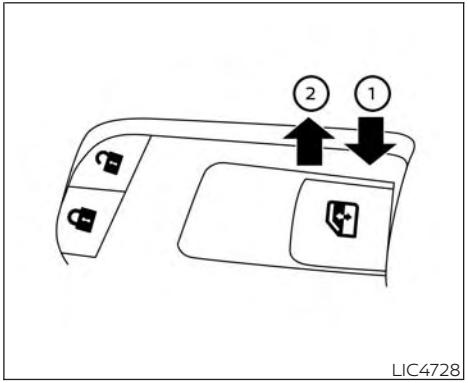

Front passenger's power window switch

The passenger's window switch operates only the corresponding passenger's window. To open the window partially, push the switch down ① lightly until the desired window position is reached. To close the window partially, pull the switch up ② until the desired window position is reached.

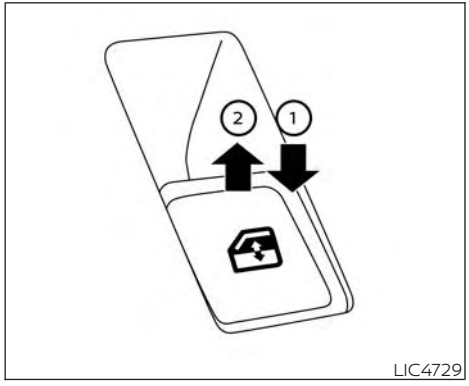

LIC4729

Rear power window switch

The rear power window switches open or close only the corresponding windows. To open the window, push the switch and hold it down ①. To close the window, pull the switch up ②.

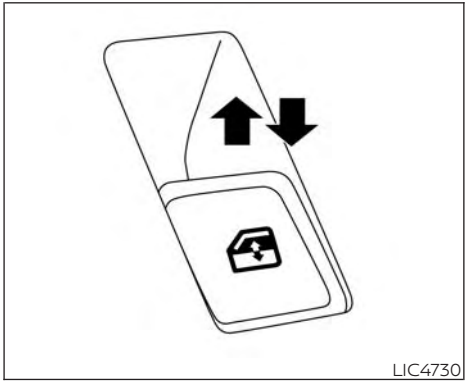
LIC4730

Automatic operation

To fully open a window equipped with automatic operation, push the window switch down to the second detent and release it; it need not be held. The window automatically opens all the way. To stop the window, lift the switch up while the window is opening.

Auto-reverse function

The auto-reverse function can be activated when a window is closed by automatic operation.

Depending on the environment or driving conditions, the auto-reverse function may be activated if an impact or load similar to something being caught in the window occurs.

⚠WARNING

There are some small distances immediately before the closed position which cannot be detected. Make sure that all passengers have their hands, etc., inside the vehicle before closing the window.

If the vehicle's battery is disconnected, replaced, or jump started, the power window auto-reverse function may not operate properly. If this occurs, please contact the dealer to re-initialize the power window auto-reverse system.

If the control unit detects something caught in a window equipped with automatic operation, as it is closing, the window will be immediately lowered.

When power window switch does not operate

If the power window automatic function (closing only) does not operate properly, perform the following procedure to initialize the power window system:

1. Place the ignition switch in the ON position.
2. Open the window more than halfway by operating the power window switch.
3. Pull the power window switch and hold it to close the window, and then hold the switch more than 3 seconds after the window is closed.
4. Release the power window switch. Operate the window by the automatic function to confirm the initialization is complete. The power window automatically opens or closes depending on if the automatic down or up function is selected.
5. Perform steps 2 through 4 above for other windows.

If the power window function does not operate properly after performing the above procedure have the system checked and repaired. It is recommended that you visit a NISSAN dealer for this service.

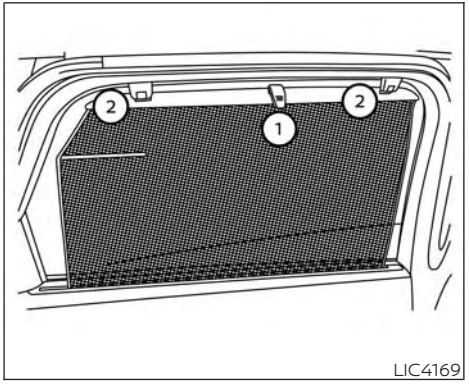

LIC4169

REAR DOOR SUNSHADE (if so equipped)

The rear door sunshade is located within the rear doors at the base of the window.

- To raise the sunshade, pull up the center tab ①.
- Hook the sunshade slots onto the tabs extending from the top of the window frame ②.

⚠ CAUTION

- **Do not release the rear door sunshade during operation. This could damage the sunshade or cause injury.**
- **Do not forcefully pull the sunshade. Doing so may elongate the sunshade. This could cause improper operation or could damage the sunshade.**
- **Do not place objects on or near the rear sunshade. This could cause improper operation or could damage the sunshade.**

NOTE:
To avoid damage to the sunshade, please note the following:

- **Do not pull or push the sunshade, other than upwards.**
- **Do not pull or push the sunshade with the sunshade hung on the hooks.**
- **Do not allow liquids or objects on the storing area of the sunshade.**

⚠ WARNING

- **In an accident you could be thrown from the vehicle through an open moonroof. Always use seat belts and child restraints.**
- **Do not allow anyone to stand up or extend any portion of their body of the moonroof opening while the vehicle is in motion or while the moonroof is closing.**

⚠ CAUTION

- **Remove water drops, snow, ice or sand from the moonroof before opening.**
- **Do not place any heavy object on the moonroof or surrounding area.**

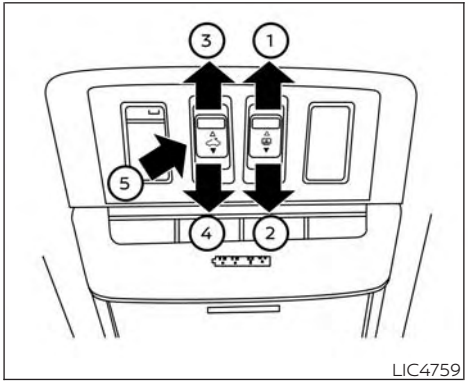

AUTOMATIC MOONROOF AND SUNSHADE

Sliding sunshade and moonroof

When the sunshade switch is pushed to the OPEN position ①, the sunshade open. (If the sunshade starts to open from the position between close and half open, the sunshade will stop half. When the switch is pushed again, the sunshade will open fully.) When the moonroof switch is pushed to the OPEN position ③, the moonroof opens to the comfort mode position. (If the sunshade is close, the sunshade will open half first. When the switch is pushed again, the moonroof will open fully.)

When the moonroof switch is pushed to the CLOSE position ④, the moonroof will automatically close. When the sunshade switch is pushed to the CLOSE position ②, the sunshade will close. (If the sunshade starts to close from the position between full and half open, the sunshade will stop half. When the switch is pushed again, the sunshade will close fully. However, if the moonroof is open or tilted up, the sunshade will not close beyond half.)

To stop the sunshade or moonroof during the operation, push the moonroof switch to either of the OPEN ①, ③, CLOSE ②, ④ or UP ⑤ position.

Tilting the moonroof

To tilt up the moonroof, push the moonroof switch to the UP position ⑤. To tilt down the moonroof, push the switch to the CLOSE position ④.

Comfort mode

This is the position used when driving with the moonroof open. When driving with the moonroof fully open, wind noise may be very loud. Use the comfort mode position when driving.

Auto-reverse function

⚠WARNING

There are some small distances immediately before the closed position which cannot be detected. Make sure that all passengers have their hands, etc., inside the vehicle before closing the moonroof and sunshade.

The auto-reverse function enables the moonroof and sunshade to automatically reverse when something is caught in the moonroof and sunshade as it is closing. When the control unit detects an obstacle, the moonroof and sunshade will open immediately.

Depending on the environment or driving conditions, the auto-reverse function may activate if an impact or load similar to something being caught in the moonroof and sunshade occurs.

If the auto-reverse function activates consecutively or the battery is discharged, the moonroof and sunshade may not close properly. In this case, push and hold the switch to the CLOSE position ④ to close the moonroof.

If the moonroof switch does not operate

If the moonroof and sunshade do not operate properly, perform the following procedure to initialize the operation system.

1. If the moonroof and sunshade are open, close them fully by repeatedly pushing the moonroof switch to the CLOSE ② and ④ position.
2. Push and hold the moonroof switch to the CLOSE ④ position for 10 seconds.
3. After the moonroof and sunshade move slightly to the closed position and then move back a little, release the moonroof switch.
4. Push and hold the moonroof switch to the CLOSE ④ position, and the glass and shade will move.
5. Release the moonroof switch. Then the moonroof and sunshade will fully open and then fully close.
6. Check if the moonroof switch operates normally.

⚠WARNING

The driver is always responsible for operating the moonroof properly, including the operation by all passengers. Failure to follow the warnings and instructions for proper use of the moonroof could result in serious injury or death.

- **Do not allow children to operate the moonroof. Improper operation by children may cause an accident. If children or others get caught in the moonroof, it could cause serious injury.**
- **To help avoid risk of injury or death through unintended operation of the moonroof, place the ignition switch in the OFF position when leaving the vehicle, and do not leave children and the Intelligent Key inside the vehicle.**
- **Do not activate the auto-reverse function intentionally. If hands or face, etc. get caught in the moonroof, it could cause serious injury.**

⚠ CAUTION

- **Do not place objects (such as newspapers, handkerchiefs, etc.) on the sunshade when it is extending or retracting causing improper operation or damage to the sunshade.**
- **Do not push the sunshade arm with your hands, etc., as this may deform it. Improper operation or damage to the sunshade may result.**
- **Do not put any object into the sunshade inlet port as this may result in improper operation or damage the sunshade.**
- **Do not hang any object on the arm rail as this may result in improper operation or damage the sunshade.**
- **Do not forcefully pull the sunshade. Doing so may elongate the sunshade. Improper operation or damage to the sunshade may result.**

If the moonroof does not operate properly after performing the procedure above, have your vehicle checked by a NISSAN dealer.

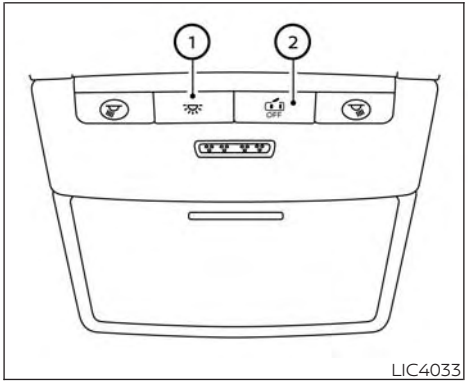

LIC4033

① The interior light can be turned on regardless of door position. The light will go off after a period of time unless the ignition switch is placed in the ON position when any door is opened.

② The interior lights can be set to operate when the doors are opened. To turn off the interior lights when a door is open, push the switch, the interior lights will not illuminate, regardless of door position.

The lights will go off when the ignition switch is placed in the ON position, or the driver's door is closed and locked. The lights will also go off after a period of time when the doors are open.

NOTE:

The footwell lights (if so equipped) illuminate when the driver and passenger doors are opened regardless of the interior light switch position. These lights will turn off automatically after a period of time while doors are open to prevent the battery from becoming discharged.

⚠ CAUTION

Do not use for extended periods of time with the engine stopped. This could result in a discharged battery.

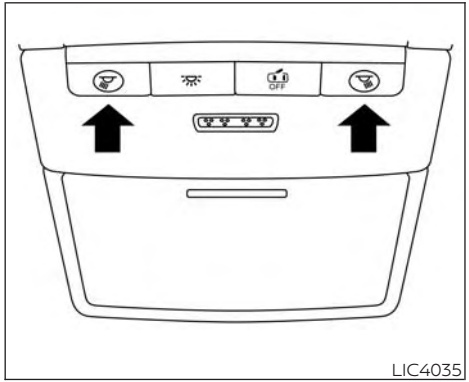

LIC4035

MAP LIGHTS

To turn the map lights on, push the switches. To turn them off, push the switches again.

⚠CAUTION

Do not use for extended periods of time with the engine stopped. This could result in a discharged battery.

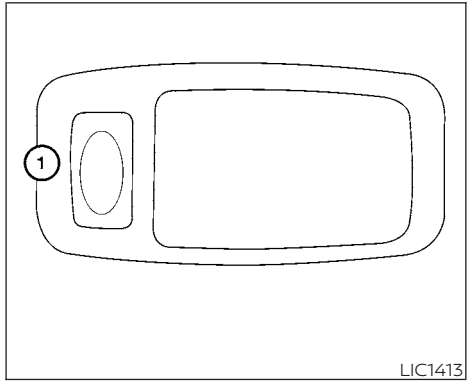

LIC1413

PERSONAL LIGHTS

To turn on the personal lights, push and release the switch ①.

To turn off the personal lights, push and release the switch ①.

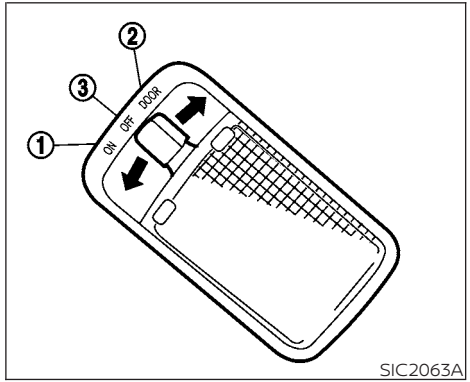

SIC2063A

CARGO LIGHT

The cargo light on the overhead trim has a three-position switch. To operate, push the switch to the desired position.

① ON: The light is illuminated.

② DOOR: The light illuminates when the liftgate is opened. The light turns off when the liftgate is closed.

③ OFF: The light does not illuminate regardless of liftgate position or lock status.

HOMELINK® UNIVERSAL TRANSCEIVER (Type A) (if so equipped)

⚠ CAUTION

Do not use for extended periods of time with the engine stopped. This could result in a discharged battery.

The HomeLink® Universal Transceiver provides a convenient way to consolidate the functions of up to three individual handheld transmitters into one built-in device.

HomeLink® Universal Transceiver:

- Will operate most radio frequency devices such as garage doors, gates, home and office lighting, entry door locks and security systems.
- Is powered by your vehicle's battery. No separate batteries are required. If the vehicle's battery is discharged or is disconnected, HomeLink® will retain all programming.

When the HomeLink® Universal Transceiver is programmed, retain the original transmitter for future programming procedures (Example: new vehicle purchases). Upon sale of the vehicle, the programmed HomeLink® Universal Transceiver buttons should be erased for security purposes. For additional information, see "Programming HomeLink®" (P. 2-129).

⚠ WARNING

- **Your vehicle's engine should be turned off while programming the HomeLink® Universal Transceiver. For additional information, see "Push-button ignition switch" (P. 5-15). Do not breathe exhaust gases; they contain colorless and odorless carbon monoxide. Carbon monoxide is dangerous. It can cause unconsciousness or death.**
- **Do not use the HomeLink® Universal Transceiver with any garage door opener that lacks safety stop and reverse features as required by federal safety standards. (These standards became effective for opener models manufactured after April 1, 1982.) A garage door opener which cannot detect an object in the path of a closing garage door and then automatically stop and reverse does not meet current federal safety standards. Using a garage door opener without these features increases the risk of serious injury or death.**

- **During the programming procedure your garage door or security gate will open and close (if the transmitter is within range). Make sure that people or objects are clear of the garage door, gate, etc., that you are programming.**

PROGRAMMING HOMELINK®

The following steps show generic instructions on how to program a Homelink® button. If you have any questions or are having difficulty programming your HomeLink® buttons, refer to the HomeLink® web site at: www.homelink.com/nissan or call 1-800-355-3515.

NOTE:

It is also recommended that a new battery be placed in the hand-held transmitter of the device being programmed to Homelink® for quicker programming and accurate transmission of the radio-frequency.

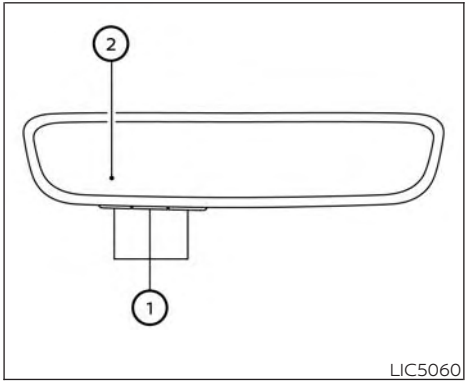

① Homelink® buttons (1–3)

② Indicator light (appears above each Homelink® button)

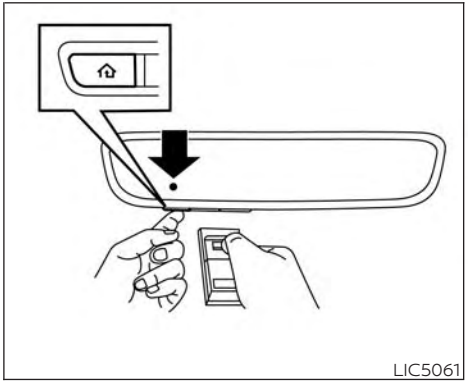

1. Press and release the HomeLink® button that you would like to program. The HomeLink® indicator light will flash in orange slowly (if not, see "Clearing the programmed information" (P. 2-131).
2. Position the hand-held transmitter (garage door opener remote) 2-8 cm (1-3 inches) away from the HomeLink® button that you would like to program.

NOTE:

Some hand-held transmitter (garage door opener remote) may actually train better a distance of 15–20 cm (6–12 inches). Keep this in mind if you have difficulty with the programming process.

3. While the HomeLink® indicator light is flashing in orange, press and hold the hand-held transmitter button. Continue pressing the hand-held transmitter button until the HomeLink® indicator light changes from orange to green. You may now release the hand-held transmitter button.

NOTE:

Some devices to be programmed may require you to replace the step 3 with the cycling procedure noted in "Programming HomeLink® for gate openers" (P. 2-131).

4. **Wait until your garage door has stopped moving** before completing the next steps.
5. Press the HomeLink® button and observe the indicator light.
   - If the indicator light remains constant green, your device should operate when the HomeLink® button is pressed. At this point, if your device operates, programming is complete.
   - If the indicator light rapidly flashes in green, firmly press, **hold for two seconds** and release the HomeLink® button up to three times to complete the programming process. **Do not press the HomeLink® button rapidly.** At this point if your device operates, programming is complete. If the device does not operate or operates but no door status indicator with Two-Way Communication*1, continue with the next step of the programming instructions.
6. At the garage door opener motor (security gate motor, etc.), locate the "Learn" or "Set" button. This can usually be found where the hanging antenna wire is attached to the motor-head unit (see the device's manual to identify this button.). The name and color of the button may vary by manufacturer.

NOTE:

A ladder and/or second person may simplify the following steps. Do not stand on your vehicle to perform the next steps.

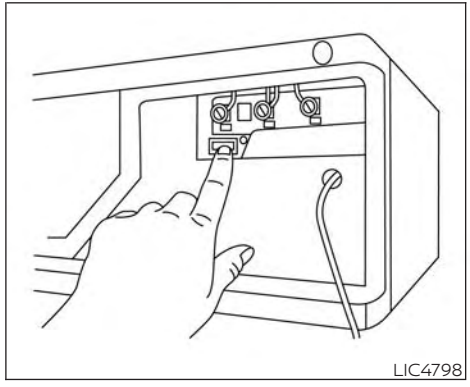

Example

7. Firmly press and release the "Learn" or "Set" button until the indicator illuminates. Once the button is pressed, you have approximately 30 seconds to initiate the next step.
8. Return to the vehicle and firmly press, hold for two seconds and release the HomeLink® button up to three times. **Do not press the HomeLink® button rapidly.** At this point programming is complete and your device should operate when the HomeLink® button is pressed and released.

9. If you have any questions or are having difficulty programming your HomeLink® buttons, refer to the HomeLink® web site at: www.homelink.com/nissan or call 1-800-355-3515.

PROGRAMMING HOMELINK® FOR GATE OPENERS

NOTE:

When programming a garage door opener, etc., unplug the device during the "cycling" process to prevent possible damage to the device components.

Step 3: While the HomeLink® indicator light is flashing in orange, press and release ("cycling") the hand-held transmitter button every 2 seconds. Continue to press and release the hand-held transmitter button until the HomeLink® indicator light changes from orange to green. When the indicator light illuminates in green, the hand-held transmitter button may be released.

Proceed with "Programming HomeLink®" step 4 to complete.

Remember to plug the device back in when programming is completed.

OPERATING THE HOMELINK® UNIVERSAL TRANSCEIVER

The HomeLink® Universal Transceiver, after it is programmed, can be used to activate the programmed device. To operate, firmly press the appropriate programmed HomeLink® button. The indicator light will illuminate in green with three parenthesis (( )) on the mirror while the signal is being transmitted.

PROGRAMMING TROUBLE-SHOOTING

If the HomeLink® does not quickly learn the hand-held transmitter information:

- Replace the hand-held transmitter batteries with new batteries.
- Position the hand-held transmitter with its battery area facing away from the HomeLink® button.
- Press and hold both the HomeLink® button and hand-held transmitter button in each step without interruption.
- Position the hand-held transmitter 2 to 8 cm (1 to 3 in) away from the HomeLink® button. Hold the transmitter in that position for up to 15 seconds. If HomeLink® is not programmed within that time, try holding the transmitter in another position – for example, 15 to 20 cm (6 to 12 in) away, keeping the HomeLink® button in view at all times.

If you have any questions or are having difficulty programming your HomeLink® buttons, refer to the HomeLink® web site at: www.homelink.com/nissan or call 1-800-355-3515.

CLEARING THE PROGRAMMED INFORMATION

The following procedure clears the programmed information from three buttons. Individual buttons cannot be cleared. However, individual buttons can be reprogrammed. For additional information, see "Reprogramming a single HomeLink® button" (P. 2-132).

To clear all programming

1. Press and hold the two outer HomeLink® buttons until the indicator light begins to flash in green, in approximately 10 seconds. Do not hold for longer than 20 seconds.
2. Release both buttons.

HomeLink® is now in the programming mode and can be programmed at any time beginning with "Programming HomeLink®" - Step 1.

REPROGRAMMING A SINGLE HOMELINK® BUTTON

To reprogram a HomeLink® button, complete the following:

1. Press and hold the desired HomeLink® button. **DO NOT** release the button.
2. The indicator light will illuminate in green, and after 20 seconds it will begin to flash in orange.
3. Release the HomeLink® button and proceed with " Programming HomeLink®" — Step 3.

For questions or comments, contact HomeLink® at: www.homelink.com/nissan or 1–800–355–3515.

The HomeLink® button has now been reprogrammed. The new device can be activated by pressing the HomeLink® button that was just programmed. This procedure will not affect any other programmed HomeLink® buttons.

If a new device is not programmed to the HomeLink® button, it will revert to the previously stored programming.

IF YOUR VEHICLE IS STOLEN

If your vehicle is stolen, you should change the codes of any non-rolling code device that has been programmed into HomeLink®. Consult the Owner's Manual of each device or call the manufacturer or dealer of those devices for additional information.

When your vehicle is recovered, you will need to reprogram the HomeLink® Universal Transceiver with your new transmitter information.

FCC Notice:

For USA:

This device complies with Part 15 of the FCC Rules. Operation is subject to the following two conditions: (1) This device may not cause harmful interference, and (2) this device must accept any interference received, including interference that may cause undesired operation.

NOTE:

Changes or modifications not expressly approved by the party responsible for compliance could void the user's authority to operate the equipment.

For Canada:

This device contains licence-exempt transmitter(s)/receiver(s) that comply with Innovation, Science and Economic Development Canada's licence-exempt RSS(s). Operation is subject to the following two conditions: (1) This device may not cause interference. (2) This device must accept any interference, including interference that may cause undesired operation of the device.

HOMELINK® UNIVERSAL TRANSCEIVER (Type B) (if so equipped)

The HomeLink® Universal Transceiver provides a convenient way to consolidate the functions of up to three individual hand-held transmitters into one built-in device.

HomeLink® Universal Transceiver:

- Will operate most Radio Frequency (RF) devices such as garage doors, gates, home and office lighting, entry door locks and security systems.
- Is powered by your vehicle's battery. No separate batteries are required. If the vehicle's battery is discharged or is disconnected, HomeLink® will retain all programming.

When the HomeLink® Universal Transceiver is programmed, retain the original transmitter for future programming procedures (Example: new vehicle purchases). Upon sale of the vehicle, the programmed HomeLink® Universal Transceiver buttons should be erased for security purposes. For additional information, see "Programming HomeLink®" (P. 2-133).

⚠WARNING

- **Do not use the HomeLink® Universal Transceiver with any garage door opener that lacks safety stop and reverse features as required by federal safety standards. (These standards became effective for opener models manufactured after April 1, 1982.) A garage door opener which cannot detect an object in the path of a closing garage door and then automatically stop and reverse does not meet current federal safety standards. Using a garage door opener without these features increases the risk of serious injury or death.**
- **During the programming procedure your garage door or security gate will open and close (if the transmitter is within range). Make sure that people or objects are clear of the garage door, gate, etc., that you are programming.**
- **Your vehicle's engine should be turned off while programming the HomeLink® Universal Transceiver. Do not breathe exhaust gases; they contain colorless and odorless carbon monoxide. Carbon monoxide is dangerous. It can cause unconsciousness or death.**

NOTE:

If your vehicle is equipped with Intelligent Rear View Mirror, you may have to complete additional programming to enable Two-Way Communication. The mirror can provide the status of your garage door (open/close).

PROGRAMMING HOMELINK®

The following steps show generic instructions on how to program a HomeLink® button. If you have any questions or are having difficulty programming your HomeLink® buttons, refer to the HomeLink® web site at: www.homelink.com/nissan or call 1-800-355-3515.

NOTE:

It is also recommended that a new battery be placed in the hand-held transmitter of the device being programmed to HomeLink® for quicker programming and accurate transmission of the radio-frequency.

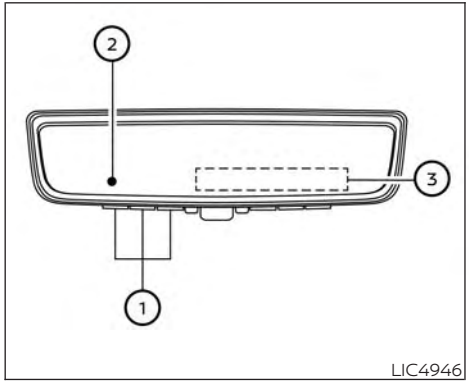

① HomeLink® buttons (1–3)

② Indicator light (appears above each HomeLink® button

③ Status display (where the current condition of the HomeLink® is displayed)

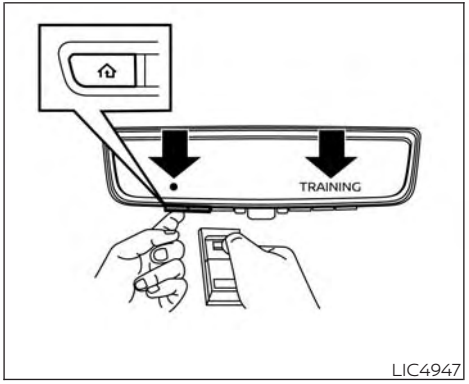

1. Press and release the HomeLink® button that you would like to program. The HomeLink® indicator light will flash in orange slowly and "TRAINING" is displayed on the lower right of the mirror (if not, see "Clearing the programmed information" (P. 2-138).
2. Position the hand-held transmitter (garage door opener remote) 1-3 inches (2-8 cm) away from the HomeLink® button that you would light to program.

NOTE:

Some hand-held transmitter (garage door opener remote) may actually train better a distance of 6–12 inches (15–20 cm). Keep this in mind if you have difficulty with the programming process.

3. While the HomeLink® indicator light is flashing in orange, press and hold the hand-held transmitter button. Continue pressing the hand-held transmitter button until the HomeLink® indicator light changes from orange to green and "TRAINED" is displayed on the lower right of the mirror. You may now release the hand-held transmitter button.

NOTE:

Some devices to be programmed may require you to replace the step 3 with the cycling procedure noted in "Programming HomeLink® for gate openers" (P. 2-137).

4. **Wait until your garage door has stopped moving** before completing the next steps.
5. Press the HomeLink® button and observe the indicator light.
   - If the indicator light remains constant green, your device should operate when the HomeLink® button is pressed.

At this point, if your device operates, programming is complete.

- If the indicator light rapidly flashes in green, firmly press, **hold for two seconds** and release the HomeLink® button up to three times to complete the programming process. **Do not press the HomeLink® button rapidly.** At this point if your device operates, programming is complete. If the device does not operate or operates but no door status indicator with Two-Way Communication*1, continue with the next step of the programming instructions.

6. At the garage door opener motor (security gate motor, etc.), locate the "Learn" or "Set" button. This can usually be found where the hanging antenna wire is attached to the motor-head unit (see the device's manual to identify this button.). The name and color of the button may vary by manufacturer.

NOTE:

A ladder and/or second person may simplify the following steps. Do not stand on your vehicle to perform the next steps.

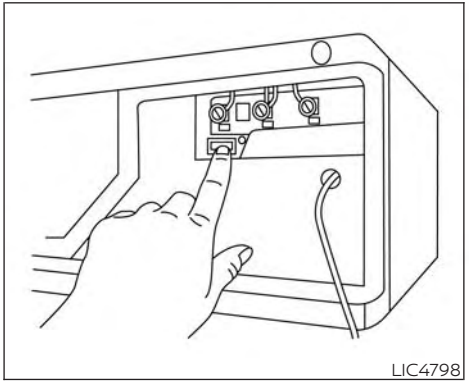

Example

7. Firmly press and release the "Learn" or "Set" button until the indicator illuminates. Once the button is pressed, you have approximately 30 seconds to initiate the next step.
8. Return to the vehicle and firmly press, hold for two seconds and release the HomeLink® button up to three times. **Do not press the HomeLink® button rapidly.** At this point programming is complete and your device should operate when the HomeLink® button is pressed and released.
9. If you have any questions or are having difficulty programming your HomeLink® buttons, refer to the HomeLink® web site at: www.homelink.com/nissan or call 1-800-355-3515.

***1: Programming Two-Way Communication**

To check if your garage door opener is compatible with this feature, refer to the homelink.com/compatible/two-way-communication website. If your garage door opener has this functionality, HomeLink® mirror garage door status indicators may appear after completion of programming.

NOTE:

It is possible for the HomeLink® to stop working with the garage door system shortly after initial programming if the Two-Way Communication programming is not completed. If this is the case, following the steps below will restore door operation.

1. In your vehicle, press and hold the trained HomeLink® button for 2 seconds, then release. Confirm that the garage door is moving. When the garage door stops, you will have one minute to complete the following steps:

NOTE:

A ladder and/or second person may simplify the following steps. Do not stand on your vehicle to perform the next steps.

2. On your garage door opener in your garage, locate the "Learn" or "Set" button (usually near where the hanging antenna wire is attached to the garage door opener). If there is difficulty locating this button, refer to the device's owner's manual.
3. Press and release the "Learn" or "Set" button.
4. A light on your garage door opener may flash, and your two-way HomeLink® indicators in your vehicle may flash, confirming completion of the process.
5. Pressing the trained HomeLink® button will now activate your garage door. The status indicators will show when the door is moving.
6. Your two-way enrollment is now complete.

USING THE GARAGE DOOR TWO-WAY COMMUNICATION

HomeLink® has the function of communicating with garage door opener systems. If your garage door openers are compatible with HomeLink®, the HomeLink® can:

- receive and display "closing" or "opening" status from your garage door opener.
- recall and display the garage door being "closed" or "opened".

HomeLink® can receive the status from a garage door opener at a range up to 250 m (820 ft), but it varies depending on the environment. You may need to reduce vehicle speed to successfully receive the garage door opener communication.

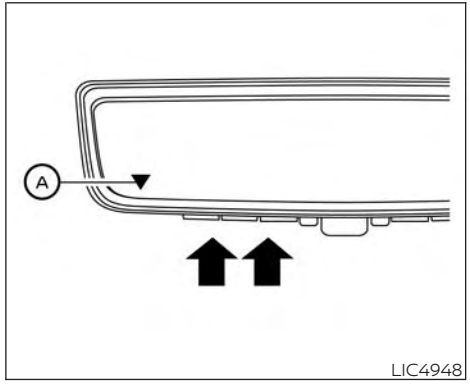

Using two-way communication

Press and hold the HomeLink® buttons (1 and 2) simultaneously for 2 seconds to recall and display the last recorded garage door status communicated to HomeLink®. HomeLink® will display the last recorded status for 3 seconds.

If two-way communication programming is successful, HomeLink® will display the status of your garage door opener with the status indicator Ⓐ, which changes

depending on the status. The garage door opener status indicator shows the garage door opener status as follows:

- ▼ Flashing in orange — Closing
- ▲ Flashing in orange — Opening
- ▼ Illuminating in green — Closed
- ▲ Illuminating in green — Opened

The status indicator stops to flash after an open/close signal is received or no signal is received within 30 seconds from the garage door opener.

PROGRAMMING HOMELINK® FOR GATE OPENERS

If you are having difficulties programming a gate operator **or** garage door opener by using the "Programming HomeLink®" procedures, replace "Programming HomeLink®" step 3 with the following:

NOTE:

When programming a garage door opener, etc., unplug the device during the "cycling" process to prevent possible damage to the device components.

Step 3: While the HomeLink® indicator light is flashing in orange, press and release ("cycling") the hand-held transmitter button every 2 seconds. Continue to press and release the hand-held transmitter button until the HomeLink® indicator light changes from orange to green. When the indicator light illuminates in green, hand-held transmitter button may be released.

Proceed with "Programming HomeLink®" step 4 to complete.

Remember to plug the device back in when programming is completed.

OPERATING THE HOMELINK® UNIVERSAL TRANSCEIVER

The HomeLink® Universal Transceiver, after it is programmed, can be used to activate the programmed device. To operate, firmly press the appropriate programmed HomeLink® button. The indicator light will illuminate in green with three parenthesis (( )) on the mirror while the signal is being transmitted.

PROGRAMMING TROUBLE-SHOOTING

If the HomeLink® does not quickly learn the hand-held transmitter information:

- Replace the hand-held transmitter batteries with new batteries.
- Position the hand-held transmitter with its battery area facing away from the HomeLink® button.
- Press and hold both the HomeLink® button and hand-held transmitter button in each step without interruption.
- Position the hand-held transmitter 1 to 3 in (2 to 8 cm) away from the HomeLink® button. Hold the transmitter in that position for up to 15 seconds. If HomeLink® is not programmed within that time, try holding the transmitter in another position – for example, 6 to 12 in (15 to 20 cm) away, keeping the HomeLink® button in view at all times.

If you have any questions or are having difficulty programming your HomeLink® buttons, refer to the HomeLink® web site at: www.homelink.com/nissan or call 1-800-355-3515.

CLEARING THE PROGRAMMED INFORMATION

The following procedure clears the programmed information from three buttons. Individual buttons cannot be cleared. However, individual buttons can be reprogrammed. For additional information, see "Reprogramming a single HomeLink® button" (P. 2-138).

To clear all programming

1. Press and hold the two outer HomeLink® buttons until the indicator light begins to flash in green and "CLEARED" is displayed on the mirror, in approximately 10 seconds. Do not hold for longer than 20 seconds.
2. Release both buttons.

HomeLink® is now in the programming mode and can be programmed at any time beginning with "Programming HomeLink®" - Step 1.

REPROGRAMMING A SINGLE HOMELINK® BUTTON

To reprogram a HomeLink® button, complete the following:

1. Press and hold the desired HomeLink® button. **DO NOT** release the button.
2. The indicator light will illuminate in green, and after 20 seconds it will begin to flash in orange and "TRAINING" is displayed on the mirror.
3. Release the HomeLink® button and proceed with " Programming HomeLink®" — Step 3.

For questions or comments, contact HomeLink® at: www.homelink.com/nissan or 1–800–355–3515.

The HomeLink® button has now been reprogrammed. The new device can be activated by pressing the HomeLink® button that was just programmed. This procedure will not affect any other programmed HomeLink® buttons.

If a new device is not programmed to the HomeLink® button, it will revert to the previously stored programming.

IF YOUR VEHICLE IS STOLEN

If your vehicle is stolen, you should change the codes of any non-rolling code device that has been programmed into HomeLink®. Consult the Owner's Manual of each device or call the manufacturer or dealer of those devices for additional information.

When your vehicle is recovered, you will need to reprogram the HomeLink® Universal Transceiver with your new transmitter information.

FCC Notice:

For USA:

This device complies with Part 15 of the FCC Rules. Operation is subject to the following two conditions: (1) This device may not cause harmful interference, and (2) this device must accept any interference received, including interference that may cause undesired operation.

NOTE:

Changes or modifications not expressly approved by the party responsible for compliance could void the user's authority to operate the equipment.

For Canada:

This device contains licence-exempt transmitter(s)/receiver(s) that comply with Innovation, Science and Economic Development Canada's licence-exempt RSS(s). Operation is subject to the following two conditions: (1) This device may not cause interference. (2) This device must accept any interference, including interference that may cause undesired operation of the device.

3 Pre-driving checks and adjustments

Keys . . . 3-2
NISSAN Intelligent Key® . . . 3-2
NISSAN Vehicle Immobilizer System keys . . . 3-4
Doors . . . 3-5
Locking with key . . . 3-5
Locking with inside lock knob . . . 3-6
Locking with power door lock switch . . . 3-6
Automatic door locks (if so equipped) . . . 3-6
Child safety rear door lock . . . 3-7
NISSAN Intelligent Key® system . . . 3-7
Operating range . . . 3-8
Door locks/unlocks precaution . . . 3-9
NISSAN Intelligent Key® Operation . . . 3-9
How to use the remote keyless entry function . . . 3-13
Approach unlock function . . . 3-18
Walk away lock function . . . 3-18
Warning signals . . . 3-18
Troubleshooting guide . . . 3-19
Remote Engine Start (if so equipped) . . . 3-21
Remote Engine Start operating range . . . 3-21
Remote starting the vehicle . . . 3-22
Extending engine run time . . . 3-22
Canceling a Remote Engine Start . . . 3-22
Conditions the Remote Engine Start will not work . . . 3-23
Hood . . . 3-24
Liftgate . . . 3-24
Operating the manual liftgate (if so equipped) . . . 3-25
Operating the power liftgate (if so equipped) . . . 3-25
Motion-Activated Liftgate (if so equipped) . . . 3-28
Liftgate release . . . 3-29
Liftgate position setting (if so equipped) . . . 3-30
Fuel-filler door . . . 3-31
Opening the fuel-filler door . . . 3-31
How to refuel . . . 3-32
When refueling from a portable fuel container . . . 3-34
Steering wheel . . . 3-34
Manual operation (if so equipped) . . . 3-35
Automatic operation (if so equipped) . . . 3-35
Sun visors . . . 3-36
Vanity mirrors . . . 3-37
Card holder . . . 3-37
Mirrors . . . 3-37
Manual anti-glare rearview mirror (if so equipped) . . . 3-37
Automatic anti-glare rearview mirror (if so equipped) . . . 3-38

Intelligent Rear View Mirror (if so equipped) 3-39
Outside mirrors 3-45
Memory seat (if so equipped) 3-47
Memory storage function (key-link) 3-47
Memory storage function (switch) 3-48
Entry/exit function 3-49
Setting memory function 3-49
System operation 3-50

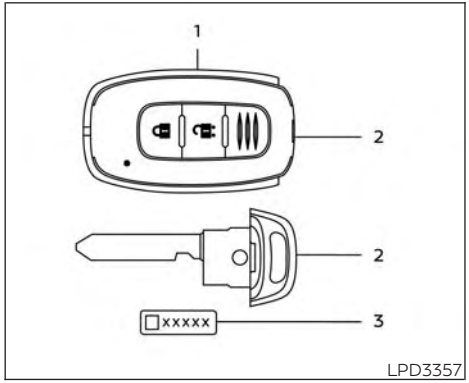

Type A (if so equipped)

1. Intelligent Key (two sets)
2. Mechanical key
3. Key number plate (one plate)

NISSAN INTELLIGENT KEY®

Your vehicle can only be driven with the Intelligent Keys which are registered to your vehicle's Intelligent Key System components and NISSAN Vehicle Immobilizer System components.

Never leave these keys in the vehicle.

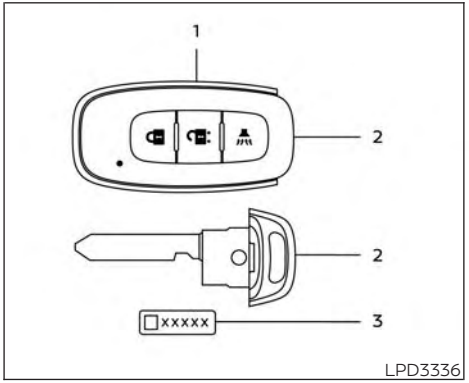

Type B (if so equipped)

As many as four Intelligent Keys can be registered and used with one vehicle. The new keys must be registered prior to use with the Intelligent Key System and NISSAN Vehicle Immobilizer System of your vehicle. It is recommended that you visit a NISSAN dealer for this service. Since the registration process requires erasing all memory in the Intelligent Key components when registering new keys, be sure to take all Intelligent Keys that you have to the NISSAN dealer.

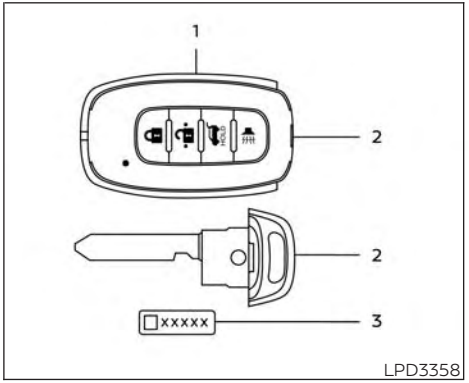

Type C (if so equipped)

A key number plate is supplied with your keys. Record the key number and keep it in a safe place (such as your wallet), not in the vehicle. If you lose your keys, it is recommended that you visit a NISSAN dealer for duplicates by using the key number. NISSAN does not record key numbers so it is very important to keep track of your key number plate.

A key number is only necessary when you have lost all keys and do not have one to duplicate from. If you still have a key, it can be duplicated without knowing the key number.

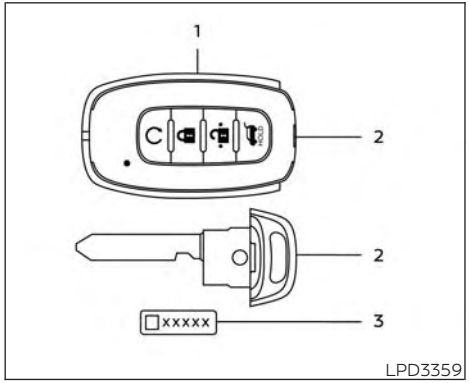

Type D (if so equipped)

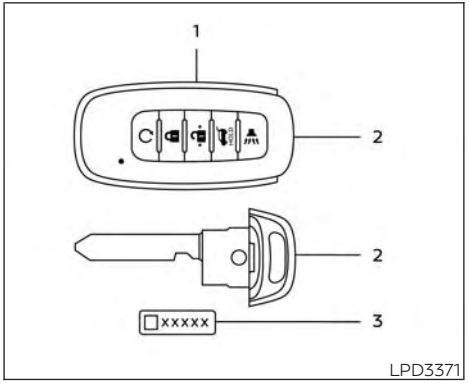

Type E (if so equipped)

⚠CAUTION

Listed below are conditions or occurrences which will damage the Intelligent Key:

- **Do not allow the Intelligent Key, which contains electrical components, to come into contact with water or salt water. This could affect the system function.**
- **Do not drop the Intelligent Key.**
- **Do not strike the Intelligent Key sharply against another object.**
- **Do not change or modify the Intelligent Key.**
- **Wetting may damage the Intelligent Key. If the Intelligent Key gets wet, immediately wipe until it is completely dry.**
- **Do not place the Intelligent Key for an extended period in an area where temperatures exceed 60°C (140°F).**
- **Do not attach the Intelligent Key with a key holder that contains a magnet.**
- **Do not place the Intelligent Key near equipment that produces a magnetic field, such as a TV, audio equipment and personal computers.**

If an Intelligent Key is lost or stolen, NISSAN recommends erasing the ID code of that Intelligent Key from the vehicle. This may prevent the unauthorized use of the Intelligent Key to operate the vehicle. For information regarding the erasing procedure, it is recommended that you visit a NISSAN dealer.

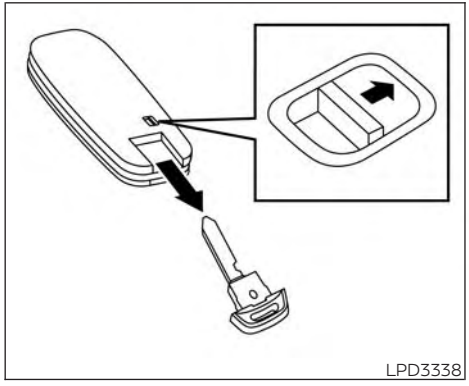
LPD3338

Mechanical key

The Intelligent Key contains the mechanical key.

To remove the mechanical key, release the lock knob on the back of the Intelligent Key.

To install the mechanical key, firmly insert it into the Intelligent Key until the lock knob returns to the lock position.

Use the mechanical key to lock or unlock the driver's door and glove box.

⚠ CAUTION

Always carry the mechanical key installed in the Intelligent Key slot.

For additional information, see "Doors" (P. 3-5) and "Glove box" (P. 2-113).

Valet hand-off

When you have to leave a key with a valet, give them the Intelligent Key itself and keep the mechanical key with you to protect your belongings.

To prevent the glove box from being opened during valet hand-off, follow the procedure below.

1. Remove the mechanical key from the Intelligent Key.
2. Lock the glove box with the mechanical key.
3. Hand the Intelligent Key to the valet and keep the mechanical key with you.

For additional information, see "Glove box" (P. 2-113).

NISSAN VEHICLE IMMOBILIZER SYSTEM KEYS

Additional or replacement keys:

If you still have a key, the key number is not necessary when you need extra NISSAN Vehicle Immobilizer System keys. Your existing key can be duplicated without knowing the key number. As many as four NISSAN Vehicle Immobilizer System keys can be used with one vehicle. You should bring all NISSAN Vehicle Immobilizer System keys that you have to the NISSAN dealer for registration. This is because the registration process will erase the memory of all key codes previously registered into the NISSAN Vehicle Immobilizer System. After the registration process, these components will only recognize keys coded into the NISSAN Vehicle Immobilizer System during registration. Any virtual key accessories (if so equipped) will also have to be reregistered. Any key that is not given to the dealer at the time of registration will no longer be able to start your vehicle.

⚠CAUTION

Do not allow the immobilizer system key, which contains an electrical transponder, to come into contact with water or salt water. This could affect system function.

When the doors are locked using one of the following methods, the doors cannot be opened using the inside or outside door handles. The doors must be unlocked to open the doors.

⚠WARNING

- **Before opening any door, always look for and avoid oncoming traffic.**
- **To help avoid risk of injury or death through unintended operation of the vehicle and/or its systems, including entrapment in windows or inadvertent door lock activation, do not leave children, people who require the assistance of others or pets unattended in your vehicle. Additionally, the temperature inside a closed vehicle on a warm day can quickly become high enough to cause a significant risk of injury or death to people and pets.**

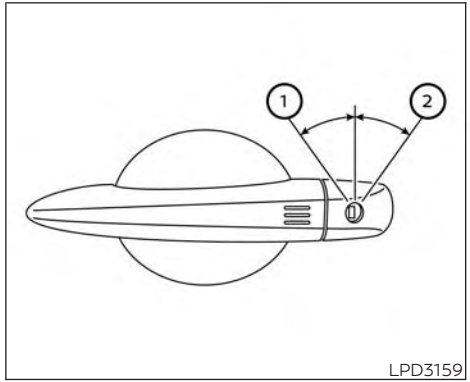

Driver's side

LOCKING WITH KEY

To lock the door using the mechanical key, turn the key toward the rear of the vehicle ②. This will only lock the corresponding door and will not activate the security system. To arm the security system, press the button on the Intelligent Key.

To unlock the corresponding door using the mechanical key, turn the key toward the front of the vehicle ①. This will only unlock the corresponding door and will not disarm the security system.

For additional information, see "Security systems" (P. 2-77).

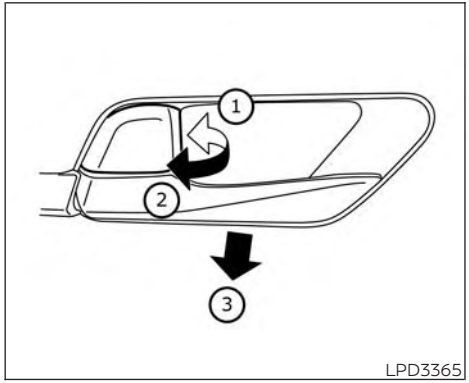

Inside lock

LOCKING WITH INSIDE LOCK KNOB

To lock the door without the key, move the inside lock knob to the lock position ①, then close the door.

To unlock the door without the key, move the inside lock knob to the unlock position ②.

On some vehicles, the driver's door can be unlocked and opened without using the lock knob. Pull the inside handle lever ③ to unlock and open it.

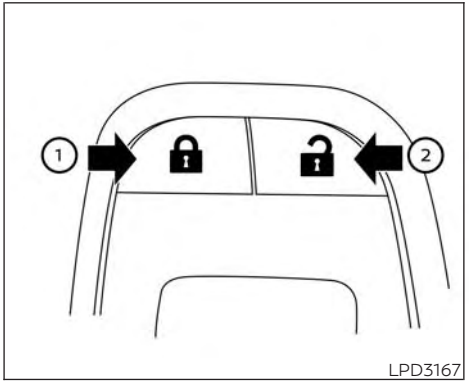

LOCKING WITH POWER DOOR LOCK SWITCH

To lock all the doors without a key, push the door lock switch (driver's or front passenger's side) to the lock position ①. When locking the door this way, be certain not to leave the key inside the vehicle.

To unlock all the doors without a key, push the door lock switch (driver's or front passenger's side) to the unlock position ②.

Lockout protection

When the power door lock switch (driver's or front passenger's side) is moved to the lock position with the Intelligent Key in the vehicle while any door is open, a warning chime will sound and all doors unlock automatically.

AUTOMATIC DOOR LOCKS (if so equipped)

- All doors lock automatically when the vehicle speed reaches 24 km/h (15 mph).
- All doors unlock automatically when the transmission is placed in the P (Park) position or when the ignition switch is placed in the OFF position.

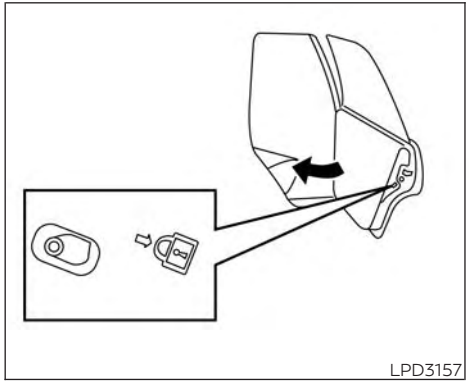
LPD3157

CHILD SAFETY REAR DOOR LOCK

Child safety locks help prevent the rear doors from being opened accidentally, especially when small children are in the vehicle.

The child safety lock levers are located on the edge of the rear doors.

When the lever is in the LOCK position, the door can be opened only from the outside.

⚠ WARNING

- **Radio waves could adversely affect electric medical equipment. Those who use a pacemaker should contact the electric medical equipment manufacturer for the possible influences before use.**
- **The Intelligent Key transmits radio waves when the buttons are pressed. The FAA advises the radio waves may affect aircraft navigation and communication systems. Do not operate the Intelligent Key while on an airplane. Make sure the buttons are not operated unintentionally when the unit is stored for a flight.**

The Intelligent Key system can operate all the door locks using the remote control function or touching the lock sensor on the vehicle without taking the key out from a pocket or purse. The operating environment and/or conditions may affect the Intelligent Key system operation.

Be sure to read the following before using the Intelligent Key system.

⚠ CAUTION

- **Be sure to carry the Intelligent Key with you when operating the vehicle.**
- **Never leave the Intelligent Key in the vehicle when you leave the vehicle.**

The Intelligent Key is capable of receiving and transmitting radio waves. The Intelligent Key system transmits weak radio waves from various distances. Environmental conditions may interfere with the operation of the Intelligent Key system under the following operating conditions:

- When operating near a location where strong radio waves or noises are transmitted, such as a TV tower, power station and broadcasting station.
- When in possession of wireless equipment, such as a cellular telephone, transceiver, or a CB radio.
- When the Intelligent Key is in contact with or covered by metallic materials.
- When any type of radio wave remote control is used nearby.
- When the Intelligent Key is placed near an electric appliance such as a personal computer.
- When the vehicle is parked near a parking meter.

In such cases, correct the operating conditions before using the Intelligent Key function or use the mechanical key.

Although the life of the battery varies depending on the operating conditions, the battery's life is approximately two years. If the battery is discharged, replace it with a new one.

When the Intelligent Key battery is low, a yellow indicator illuminates with the message "Key Battery Low" in the vehicle information display. For additional information, see "Vehicle information display 7 inch (18 cm) Type A (if so equipped)" (P. 2-24) or "Vehicle information display 12.3 inch (31 cm) Type B (if so equipped)" (P. 2-49).

Since the Intelligent Key is capable of receiving radio waves, if the key is left near equipment which transmits strong radio waves, such as signals from a TV and personal computer, the battery life may become shorter.

For additional information, see "Battery replacement" (P. 8-30).

As many as four Intelligent Keys can be registered and used with one vehicle. For information about the purchase and use of additional Intelligent Keys, it is recommended that you visit a NISSAN dealer.

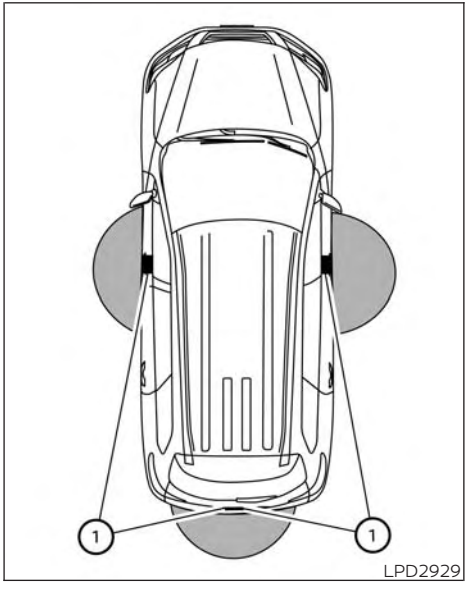

OPERATING RANGE

The Intelligent Key functions can only be used when the Intelligent Key is within the specified operating range from the lock sensor and request switch ①.

When the Intelligent Key battery is discharged or strong radio waves are present near the operating location, the Intelligent Key operating range becomes narrower, and the Intelligent Key may not function properly.

The operating range is within 80 cm (31.5 in) from each lock sensor and request switch ①.

If the Intelligent Key is too close to the door glass, handle or rear bumper, the lock sensors may not function.

When the Intelligent Key is within the operating range, it is possible for anyone, even someone who does not carry the Intelligent Key, to touch the lock sensor and the capacity sensor to lock/unlock the doors.

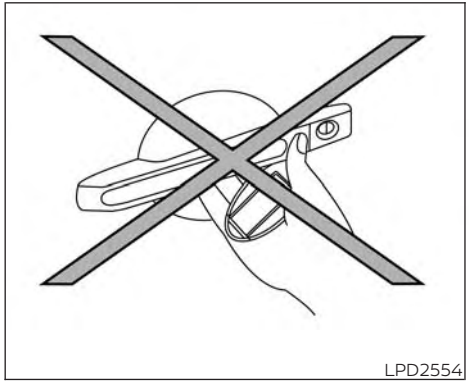

LPD2554

DOOR LOCKS/UNLOCKS PRECAUTION

- Do not touch the door handle lock sensor with the Intelligent Key held in your hand as illustrated. The close distance to the door handle will cause the Intelligent Key system to have difficulty recognizing that the Intelligent Key is outside the vehicle.
- After locking with the door handle lock sensor, verify the doors are securely locked by testing them.
- To prevent the Intelligent Key from being left inside the vehicle, make sure you carry the Intelligent Key with you and then lock the doors.
- Do not pull the door handle before touching the door handle lock sensor. The door will be unlocked but will not open. Release the door handle once and pull it again to open the door.

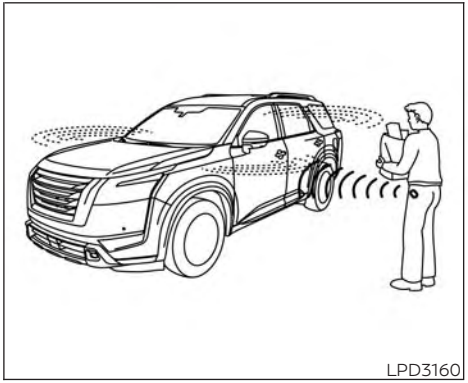

LPD3160

NISSAN INTELLIGENT KEY® OPERATION

You can lock or unlock the doors without taking the Intelligent Key out of your pocket or bag.

When you carry the Intelligent Key with you, you can lock or unlock all doors by touching the door handle lock and capacitive sensors within the range of operation.

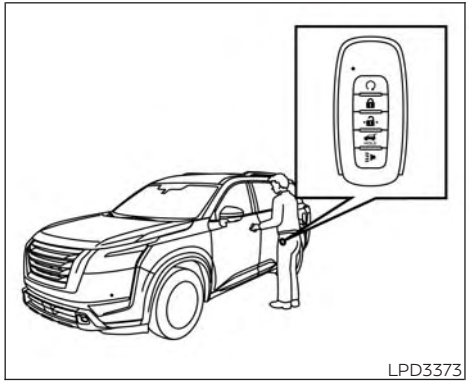
LPD3373

Locking all doors and fuel-filler door

1. Push the P (Park) button, place the ignition switch in the LOCK position and make sure you carry the Intelligent Key with you.
2. Close all doors.
3. Push any door handle lock sensor while carrying the Intelligent Key with you.
4. All doors will lock.
5. The hazard indicator lights flash twice and the outside buzzer sounds twice.

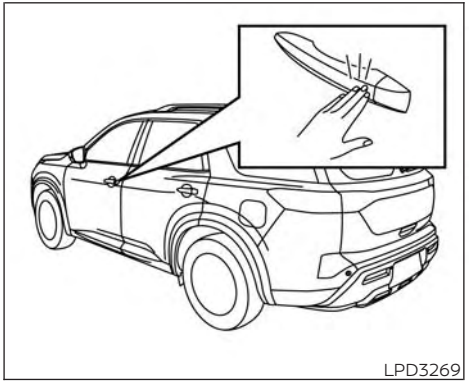
LPD3269

NOTE:

- **Lock sensors for all doors can be deactivated when the Ext. Door Switch feature is switched to OFF using the "Vehicle Settings" menu in the vehicle information display. For additional information, see "Vehicle information display 7 inch (18 cm) Type A (if so equipped)" (P. 2-24) or "Vehicle information display 12.3 inch (31 cm) Type B (if so equipped)" (P. 2-49).**
- **Doors do not lock with the door handle lock sensor with the Intelligent Key inside the vehicle and a beep sounds to warn you. However, when an Intelligent Key is inside the vehicle, doors can be locked with another Intelligent Key.**
- **Touching the door lock sensor while wearing gloves may delay or prevent lock operation. Remove the gloves and touch the lock sensor again.**
- **If the door handle becomes wet while the electronic key is within the effective range, the door may lock and unlock repeatedly. In this case, follow the following correction procedures to wash the vehicle:**
  - **Place the electronic key in a location 6 ft. (2 m) or more away from the vehicle. (Take care to ensure that the key is not stolen.)**
  - **If the electronic key is inside the vehicle and a door handle becomes wet during a car wash, a buzzer will sound outside the vehicle. To turn off the alarm, away the key from the inside vehicle.**

- **The lock sensor may not work properly if it comes in contact with ice, snow, mud, etc. Clean the lock sensor and attempt to operate it again.**
- **If the door handle becomes wet, such as rain, the door may delay or prevent lock operation. In this case, try to touch firmly the sensor for at least 1 second.**

⚠ WARNING

After locking the doors using the lock sensor, make sure that the doors have been securely locked by operating the door handles. Failure to follow these instructions may result in inadvertently unlocking the doors, which may decrease the safety and security of your vehicle.

⚠ CAUTION

- **When locking the doors using the lock sensor, make sure to have the Intelligent Key in your possession before operating the lock sensor to prevent the Intelligent Key from being left in the vehicle.**
- **The lock sensor is operational only when the Intelligent Key has been detected by the Intelligent Key system.**

Lockout protection

To prevent the Intelligent Key from being accidentally locked in the vehicle, lockout protection is equipped with the Intelligent Key system.

When any door is open, the doors are locked, and then the Intelligent Key is put inside the vehicle and all the doors are closed; a chime will sound and the lock will automatically unlock.

NOTE:

The doors may not lock when the Intelligent Key is in the same hand that is operating the lock sensor to lock the door. Put the Intelligent Key in a purse, pocket or your other hand.

⚠ CAUTION

The lockout protection may not function under the following conditions:

- **When the Intelligent Key is placed on top of the instrument panel.**
- **When the Intelligent Key is placed inside the glove box or a storage bin.**
- **When the Intelligent Key is placed inside the door pockets.**
- **When the Intelligent Key is placed inside or near metallic materials.**

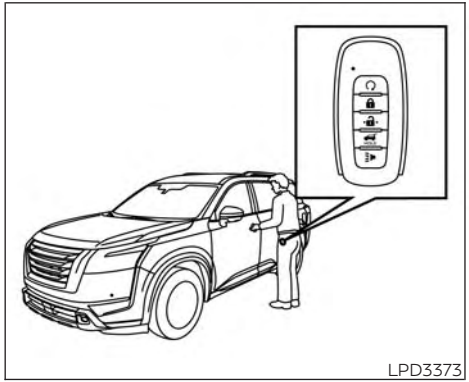
LPD3373

Unlocking doors and fuel-filler door

1. Carry the Intelligent Key.
2. Wrap your hand around the door handle to activate the capacitive unlock sensor Ⓐ.
   - When unlocking from the driver's door handle, the driver's door will unlock. Unwrap your hand from the driver's door handle and touch the lock sensor within 5 seconds to unlock all doors.
   - When unlocking from the passenger door or liftgate, all vehicle doors will unlock.
   - To allow driver and passenger doors to unlock at the same time from driver's door handle, turn off the Selective Unlock feature in the vehicle settings menu. For additional information, see "Vehicle information display 7 inch (18 cm) Type A (if so equipped)" (P. 2-24) or "Vehicle information display 12.3 inch (31 cm) Type B (if so equipped)" (P. 2-49).
3. The warning indicator lights flash once and the outside buzzer sounds once.

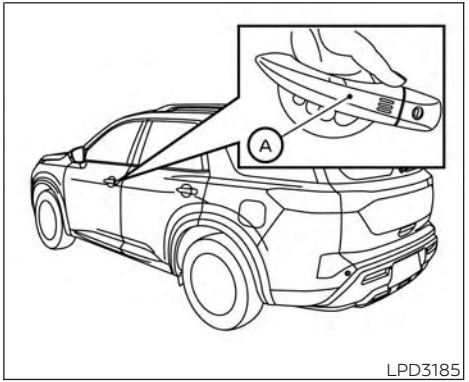

LPD3185

NOTE:

Lock sensors for all doors can be deactivated when the Ext. Door Switch feature is switched to OFF using the "Vehicle Settings" menu on the vehicle information display. For additional information, see "Vehicle information display 7 inch (18 cm) Type A (if so equipped)" (P. 2-24) or "Vehicle information display 12.3 inch (31 cm) Type B (if so equipped)" (P. 2-49).

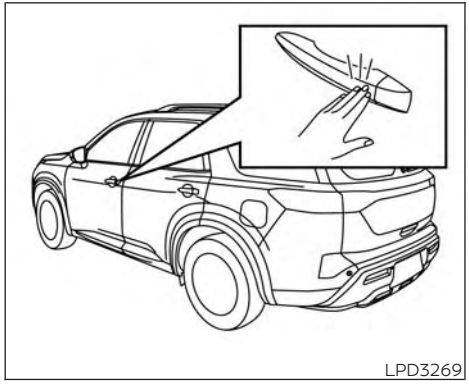
LPD3269

If a door handle is pulled while unlocking the doors, that door may not be unlocked. Returning the door handle to its original position will unlock the door. If the door does not unlock after returning the door handle, touch the door handle lock sensor to unlock the door.

All doors will be locked automatically unless one of the following operations is performed within 30 seconds after touching the lock sensor.

- Opening any door.
- Pushing the ignition switch.

Using the interior lights

The interior lights illuminate for a period of time when a door is unlocked.

The lights can be turned off without waiting by performing one of the following operations:

- Placing the ignition switch in the ON position.
- Locking the doors with the Intelligent Key.
- Switching the interior light switch to the OFF position.
- Switching the Auto Room Lamp feature to the OFF position in the "Vehicle Settings" menu on the vehicle information display. For additional information, see "Vehicle information display 7 inch (18 cm) Type A (if so equipped)" (P. 2-24) or "Vehicle information display 12.3 inch (31 cm) Type B (if so equipped)" (P. 2-49).

For additional information, see "Interior lights" (P. 2-126).

HOW TO USE THE REMOTE KEYLESS ENTRY FUNCTION

The remote keyless entry function can operate all door locks using the remote keyless function of the Intelligent Key. The remote keyless function can operate at a distance of 10 m (33 ft) away from the vehicle. The operating distance depends upon the conditions around the vehicle.

The remote keyless entry function will not function under the following conditions:

- When the Intelligent Key is not within the operational range.
- When the doors or the rear liftgate are open or not closed securely.
- When the Intelligent Key battery is discharged.

⚠ CAUTION

When locking the doors using the Intelligent Key, be sure not to leave the key in the vehicle.

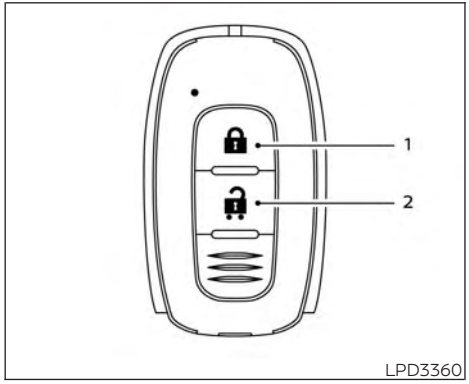

Type A (if so equipped)

1. (lock) button
2. (unlock) button

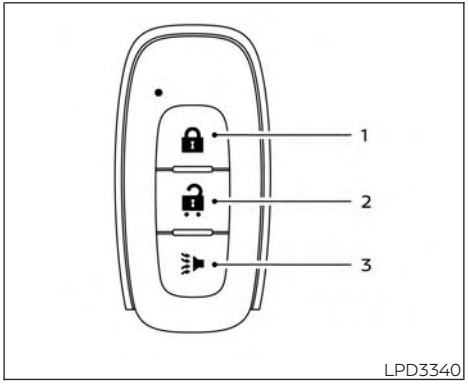

Type B (if so equipped)

1. (lock) button
2. (unlock) button
3. (panic) button

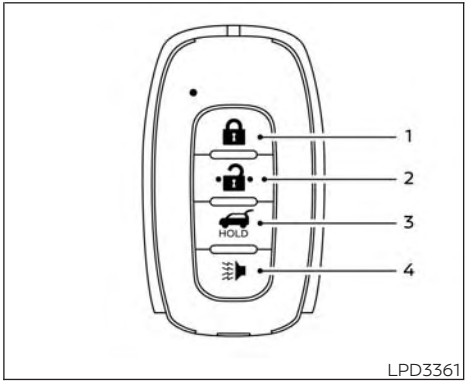

Type C (if so equipped)

1. (lock) button
2. (unlock) button
3. (liftgate) button
4. (panic) button

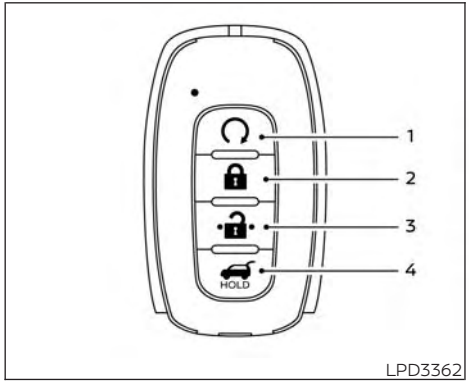

Type D (if so equipped)

1. (remote engine start) button
2. (lock) button
3. (unlock) button
4. (liftgate) button

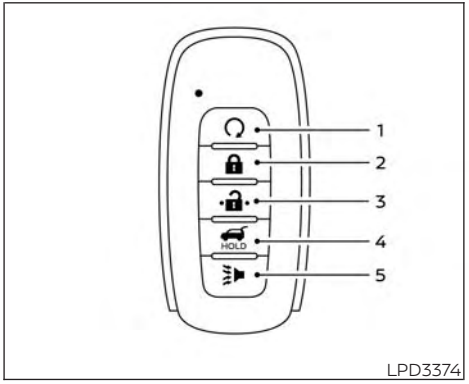

Type E (if so equipped)

1. (remote engine start) button
2. (lock) button
3. (unlock) button
4. (liftgate) button
5. (panic) button

Locking doors and fuel-filler door

1. Place the ignition switch in the LOCK position.
2. Close all doors.
3. Press the button on the Intelligent Key.
4. The hazard indicator lights flash twice and the horn beeps once.
5. All doors will be locked.

WARNING

After locking the doors using the Intelligent Key, be sure that the doors have been securely locked by operating the door handles. Failure to follow these instructions may result in inadvertently unlocking the doors, which may decrease the safety and security of your vehicle.

Unlocking doors and fuel-filler door

1. Press the button on the Intelligent Key.
2. The hazard indicator lights flash once and the driver's door will unlock.
3. Press the button again within 1 minute to unlock all doors and liftgate.

NOTE:

The Selective Unlock feature can be changed using the "Vehicle Settings" menu on the vehicle information display. For additional information, see "Vehicle information display 7 inch (18 cm) Type A (if so equipped)" (P. 2-24) or "Vehicle information display 12.3 inch (31 cm) Type B (if so equipped)" (P. 2-49).

All doors will be locked automatically unless one of the following operations is performed within 1 minute after pressing the button:

- Opening any doors.
- Pushing the ignition switch.

Using the interior lights

The interior lights illuminate for a period of time when a door is unlocked.

The lights can be turned off without waiting by performing one of the following operations:

- Placing the ignition switch in the ON position.
- Locking the doors with the Intelligent Key.
- Switching the interior light switch to the OFF position.
- Switching the Auto Room Lamp feature to the OFF position in the "Vehicle Settings" menu on the vehicle information display. For additional information, see "Vehicle information display 7 inch (18 cm) Type A (if so equipped)" (P. 2-24) or "Vehicle information display 12.3 inch (31 cm) Type B (if so equipped)" (P. 2-49).

For additional information, see "Interior lights" (P. 2-126).

Opening windows

The Intelligent Key allows you to simultaneously open windows equipped with automatic operation.

All doors must be closed and the key must be outside the vehicle.

To open the windows, press and hold the button on the Intelligent Key for **longer than 3 seconds** after all doors are unlocked.

The door windows will open while pressing the button on the Intelligent Key.

To interrupt opening of the windows, release the button.

Closing windows

⚠WARNING

When the closing feature is operating, parts of the body could become trapped in the closing area of the side window. There is a risk of injury. Observe the complete closing procedure when the closing feature is operating. When closing, make sure that no parts of the body are in the closing area.

The Intelligent Key allows you to simultaneously close windows equipped with automatic operation.

All doors must be closed and the key must be outside the vehicle.

To close the windows, press and hold the button on the Intelligent Key for **longer than 3 seconds** after all doors are locked.

The door windows will close while pressing the button on the Intelligent Key.

To interrupt closing of the windows, release the button.

Releasing the rear liftgate (if so equipped)

The rear liftgate can be opened and closed by performing the following:

- Press the button for longer than 1 second to open the rear liftgate.
- Press the button again for longer than 1 second to close the rear liftgate.

When the button is pressed during the open or close process the liftgate will stop. When pressed again, the liftgate will reverse and go in the opposite direction.

Using the panic alarm (if so equipped)

If you are near your vehicle and feel threatened, you may activate the panic alarm to call attention by pressing and holding the button on the Intelligent Key for **longer than 0.5 seconds.**

The panic alarm and headlights will stay on for a period of time.

The panic alarm stops when:

- It has run for a period of time.
- Any button is pressed on the Intelligent Key.
- The lock sensor on the driver or passenger door is pushed and the Intelligent Key is in range of the door handle.

Horn beeps on lock feature

If desired, the horn beeps on lock feature can be deactivated using the Intelligent Key. When it is deactivated and the button is pressed, the hazard indicator lights flash twice. When the button is pressed, neither the hazard indicator lights nor the horn operates.

NOTE:

If you can change the Horn beeps on lock feature with the Intelligent Key, the vehicle information display screen will show the current mode after the ignition switch has been cycled from the OFF to the ON position. The vehicle information display screen can also be used to change the horn beeps on lock mode.
For additional information, see "Vehicle information display 7 inch (18 cm) Type A" (P. 2-24) or "Vehicle information display 12.3 inch (31 cm) Type B" (P. 2-49).

To deactivate:
Press and hold the and buttons **for at least 5 seconds.** The hazard indicator lights will flash three times to confirm that the horn beeps on lock feature has been deactivated.

To activate:
Press and hold the and buttons **for at least 5 seconds once more.** The hazard indicator lights will flash once and the horn will sound once to confirm that the horn beep feature has been reactivated.

Deactivating the horn beep feature does not silence the horn if the alarm is triggered.

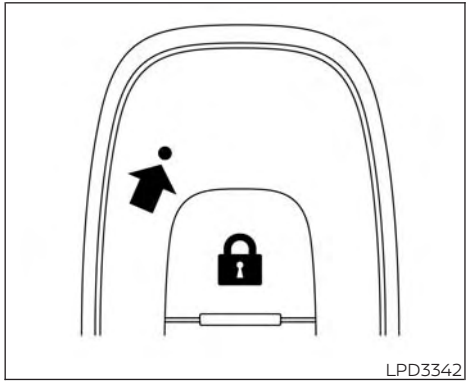

Intelligent Key button operation light

The light blinks only when you press any button on the Intelligent Key. The light illumination only signifies that the key fob has transmitted a signal. You may look and/or listen to verify that the vehicle has performed the intended operation.

If the light does not blink, your battery may be too weak to communicate to the vehicle. If this occurs, the battery may need to be replaced. For additional information regarding the replacement of a battery, see "Battery replacement" (P. 8-30).

APPROACH UNLOCK FUNCTION

When you approach the vehicle with the Intelligent Key, the vehicle will be unlocked automatically by the approach unlock function. This function is disabled by the default setting. You can enable this function by using the vehicle information display. When this function is activated, selective unlock is disabled. For additional information, see "Vehicle Settings" (P. 2-34) or "Vehicle Settings" (P. 2-61).

WALK AWAY LOCK FUNCTION

When you walk away from the vehicle with the Intelligent Key, the vehicle will be locked automatically by the walk-away lock function. This function is disabled by the default setting. You can enable this function by the vehicle information display. For additional information, see "Vehicle Settings" (P. 2-34) or "Vehicle Settings" (P. 2-61).

NOTE:

- **When the doors are locked by the walk away lock function, the hazard indicator flash twice. Be sure to confirm the door locks before you leave the vehicle.**
- **The walk-away lock function may not operate under the following conditions:**
  - **When the door(s) and/or the liftgate are not closed securely.**
  - **When the engine is running.**
  - **When the Intelligent Key is placed inside of the vehicle.**
  - **When you place the Intelligent Key outside of the vehicle for a period of time. (When a door is opened and closed, the walk-away lock function will be activated.)**

WARNING SIGNALS

To help prevent the vehicle from moving unexpectedly by erroneous operation of the Intelligent Key or to help prevent the vehicle from being stolen, a chime or buzzer sounds from inside and outside the vehicle and a warning is displayed in the instrument panel.

When a chime or beep sounds or a warning is displayed, be sure to check the vehicle and the Intelligent Key.

For additional information, see "Troubleshooting guide" (P. 3-19) and "Vehicle information display 7 inch (18 cm) Type A (if so equipped)" (P. 2-24) or "Vehicle information display 12.3 inch (31 cm) Type B (if so equipped)" (P. 2-49).

TROUBLESHOOTING GUIDE

Verify the location of all Intelligent Keys that are programmed for the vehicle. If another Intelligent Key is in range or inside the vehicle, the vehicle system may respond differently than expected.

Symptom		Possible Cause	Remedy
When stopping the engine	The Shift to Park warning appears on the display and the inside warning chime sounds continuously.	The shift position is not in the P (Park).	Push the park button to engage the P (Park) position.
When shifting the shift position to the P (Park)	The Push ignition to OFF warning appears in the display.	The ignition switch is in the ACC or ON position.	Place the ignition switch in the OFF position.
When opening the driver's door to get out of the vehicle	The Door/Liftgate Open warning appears on the display and the inside warning chime sounds continuously.	The ignition switch is in the ACC or ON position.	Place the ignition switch in the OFF position.
When closing the door after getting out of the vehicle	The No Key Detected warning appears on the display, the outside chime sounds three times and the inside warning chime sounds for approximately 3 seconds.	The ignition switch is in the ACC or ON position.	Place the ignition switch in the OFF position.
	The Rear Door Alert (if so equipped) warning message appears on the display, the horn sounds three times twice, or a "Check Back Seat For All Articles" warning appears on the display.	The Rear Door Alert (if so equipped) is activated.	Check the back seat for all articles, press the OK button to clear the Rear Door Alert (if so equipped) warning message.
	The Shift to Park warning appears on the display and the outside chime sounds continuously.	The ignition switch is in the ACC position and the shift position is not in the P (Park).	Push the park button to engage the P (Park) position and place the ignition switch in the OFF position.

Symptom		Possible Cause	Remedy
When closing the door with the inside lock knob turned to LOCK	The outside chime sounds for approximately 3 seconds and all the doors unlock.	The Intelligent Key is inside the vehicle.	Carry the Intelligent Key with you.
When touching the door handle lock sensor or the button on the Intelligent Key to lock the door	The outside chime sounds for approximately 2 seconds.	The Intelligent Key is inside the vehicle.	Carry the Intelligent Key with you.
When pushing the ignition switch to start the engine	The Key low battery warning appears on the display.	The battery charge is low.	Replace the battery with a new one. For additional information, see "Battery replacement" (P. 8-30).
	The No Key Detected warning appears on the display, the outside chime sounds three times and the inside warning chime sounds for approximately 3 seconds.	The Intelligent Key is not in the vehicle.	Carry the Intelligent Key with you.
When pushing the ignition switch	The I-Key System Error warning message in the vehicle information display appears.	It warns of a malfunction with the Intelligent Key system.	It is recommended that you visit a NISSAN dealer.

REMOTE ENGINE START (if so equipped)

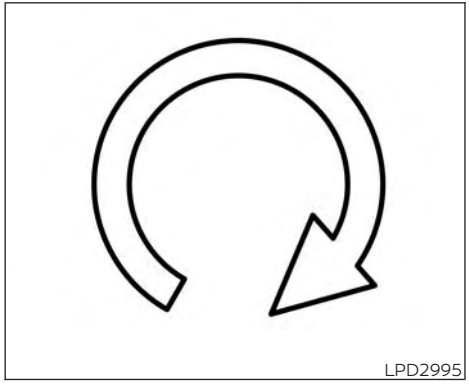
LPD2995

The button will be on the NISSAN Intelligent Key® if the vehicle has Remote Engine Start. This feature allows the engine to start from outside the vehicle.

Vehicles with an automatic climate control system may default to either a heating or cooling mode depending on outside and cabin temperatures. For additional information, see "Remote Engine Start with Intelligent Climate Control" (P. 4-34).

Laws in some local communities may restrict or prohibit the use of Remote Engine Start, or the amount of time a parked vehicle engine may idle. For example, some laws require a person using Remote Engine Start to have the vehicle in view or may restrict idling time except in freezing temperatures. Check local regulations for any requirements.

Other conditions may affect the function of the Remote Engine Start feature. For additional information, see "Conditions the Remote Engine Start will not work" (P. 3-23).

Other conditions can affect the performance of the Intelligent Key transmitter. For additional information, see "NISSAN Intelligent Key® system" (P. 3-7).

REMOTE ENGINE START OPERATING RANGE

⚠ WARNING

- **To help avoid risk of injury or death through unintended operation of the vehicle and/or its systems, including entrapment in windows or inadvertent door lock activation, do not leave children, people who require the assistance of others or pets unattended in your vehicle. Additionally, the temperature inside a closed vehicle on a warm day can quickly become high enough to cause a significant risk of injury or death to people and pets.**
- **Do not use Remote Engine Start in closed spaces such as a garage. Do not breathe exhaust gases; they contain colorless and odorless carbon monoxide. Carbon monoxide is dangerous. It can cause unconsciousness or death.**

⚠ CAUTION

When the Intelligent Key battery is discharged or other strong radio wave sources are present near the operating location, the Intelligent Key operating range becomes narrower, and the Intelligent Key may not function properly.

The Remote Engine Start function can only be used when the Intelligent Key is within the specified operating range from the vehicle.

The Remote Engine Start operating range is approximately 60 m (197 ft) from the vehicle.

REMOTE STARTING THE VEHICLE

To use the Remote Engine Start feature perform the following:

1. Aim the Intelligent Key at the vehicle.
2. Press the button to lock all doors.
3. Within 5 seconds press and hold the button until the turn signal lights flash and the tail lamps turn on. If the vehicle is not within view press and hold the button for at least 2 seconds.

The following events will occur when the engine starts:

- The parking lights will turn on and remain on as long as the engine is running.
- The doors will be locked and the climate control system may come on.
- The engine will continue to run for 10 minutes. Repeat the steps to extend the time for an additional 10 minutes. For additional information, see "Extending engine run time" (P. 3-22).

Press and hold the brake pedal while switching the ignition to the ON position before driving. For additional information, see "Driving the vehicle" (P. 5-20).

EXTENDING ENGINE RUN TIME

The Remote Engine Start feature can be extended one time by performing the steps listed in "Remote starting the vehicle" (P. 3-22). Run time will be calculated as follows:

- The first 10-minute run time will start when the Remote Engine Start function is performed.
- The second 10 minutes will start immediately when the Remote Engine Start function is performed again. For example, if the engine has been running for 5 minutes, and 10 minutes are added, the engine will run for a total of 15 minutes.
- Extending engine run time will bring you to the two Remote Engine Start limit.

A maximum of two Remote Engine Starts, or a single start with an extension, are allowed between ignition cycles.

The vehicle must be driven at speeds of 4 mph (7 km/h) before the remote engine start procedure can be used again.

CANCELING A REMOTE ENGINE START

To cancel a Remote Engine Start, perform one of the following:

- Aim the Intelligent Key at the vehicle and press until the parking lights turn off.
- Turn on the hazard indicator flashers.
- Cycle the ignition switch on and then off.
- The extended engine run time has expired.
- The first 10-minute timer has expired.
- The engine hood has been opened.
- The vehicle is shifted out of P (Park) position.
- The alarm sounds due to illegal entry into the vehicle.
- The ignition switch is pushed without an Intelligent Key in the vehicle.
- The ignition switch is pushed with an Intelligent Key in the vehicle but the brake pedal is not depressed.

CONDITIONS THE REMOTE ENGINE START WILL NOT WORK

The Remote Engine Start will not operate if any of the following conditions are present:

- The ignition switch is placed in the ON position.
- The hood is not securely closed.
- The hazard indicator lights are on.
- The engine is still running. The engine must be completely stopped. Wait at least 6 seconds if the engine goes from running to off. This is not applicable when extending engine run time.
- The button is not pressed and held for at least 2 seconds.
- The button is not pressed and held within 5 seconds of pressing the lock button.
- The brake is pressed.
- The doors are not closed and locked.
- The liftgate is open.
- The Key System Error warning message appears in the vehicle information display.
- The alarm sounds due to illegal entry into the vehicle.
- Two Remote Engine Starts, or a single Remote Engine Start with an extension, have already been used.
- The vehicle is not in P (Park).
- There is a detected registered key already inside of the vehicle.

The Remote Engine Start may display a warning or indicator in the vehicle information display. For additional information, see "Vehicle information display 7 inch (18 cm) Type A (if so equipped)" (P. 2-24) or "Vehicle information display 12.3 inch (31 cm) Type B (if so equipped)" (P. 2-49).

HOOD

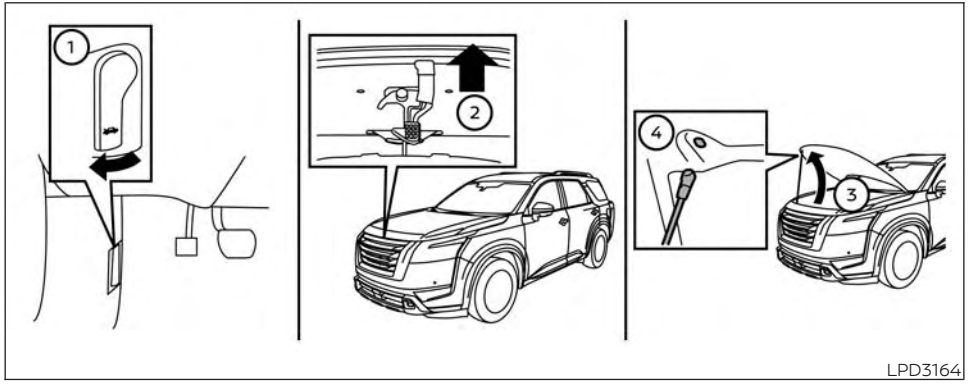

Left Hand Drive shown, Right Hand Drive similar

1. Pull the hood lock release handle ① located below the driver side instrument panel. The hood will spring up slightly.
2. Push the lever ② upward, toward the hood as illustrated with your fingertips
3. Raise the hood ③.
4. Remove the support rod and insert into the slot ④.

When closing the hood, lower it slowly and make sure it locks into place.

⚠WARNING

- **Make sure the hood is completely closed and latched before driving. Failure to do so could cause the hood to fly open and result in an accident.**
- **If you see steam or smoke coming from the engine compartment, to avoid injury do not open the hood.**

LIFTGATE

⚠WARNING

- **Always be sure the liftgate has been closed securely to prevent it from opening while driving.**
- **Do not drive with the liftgate open. This could allow dangerous exhaust gases to be drawn into the vehicle. For additional information, see "Exhaust gas (carbon monoxide)" (P. 5-6).**
- **To help avoid risk of injury or death through unintended operation of the vehicle and/or its systems, including entrapment in windows or inadvertent door lock activation, do not leave children, people who require the assistance of others or pets unattended in your vehicle. Additionally, the temperature inside a closed vehicle on a warm day can quickly become high enough to cause a significant risk of injury or death to people and pets.**
- **Always be sure that hands and feet are clear of the door frame to avoid injury while closing the liftgate.**

⚠CAUTION

Do not use accessory carriers that attach to the liftgate. Doing so will cause damage to the vehicle.

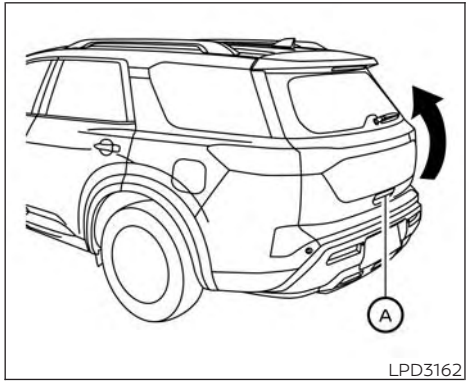

LPD3162

OPERATING THE MANUAL LIFTGATE (if so equipped)

The power door lock system allows you to lock or unlock all doors including the liftgate simultaneously.

To open the liftgate, push the liftgate opener switch Ⓐ and pull up on the handle.

To close, lower and push the liftgate down securely.

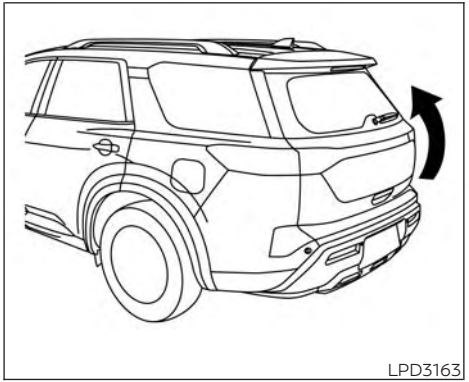
LPD3163

OPERATING THE POWER LIFTGATE (if so equipped)

⚠WARNING

- **Make sure that all passengers have their hands, etc., inside the vehicle before closing the liftgate.**
- **Do not leave children unattended inside the vehicle. They could unknowingly activate switches or controls. Unattended children could become involved in serious accidents.**

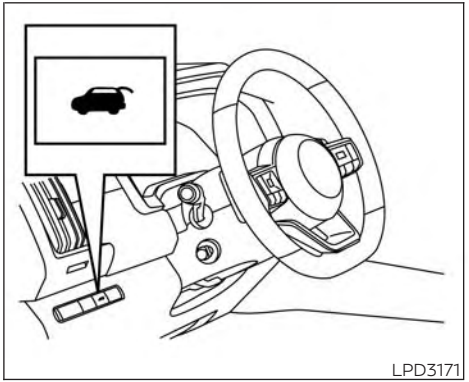
LPD3171

Instrument panel switch

NOTE:

To open, close or reverse the power liftgate, the shift position must be in P (Park). Also, the power liftgate will not operate if battery voltage is low.

Power Open:
The power liftgate automatically moves from the fully closed position to the fully open position in approximately 5 – 8 seconds. The power open feature can be activated by the button on the Intelligent Key (if so equipped), the instrument panel switch or the liftgate open switch. A chime sounds to indicate the power open sequence has been started.

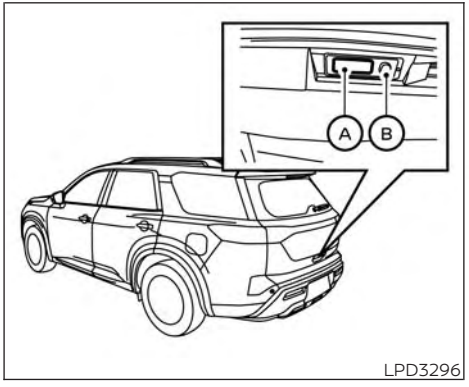

Liftgate opener switch and request switch

- When the vehicle is locked, the liftgate can be opened by the instrument panel switch, button on the Intelligent Key (if so equipped) or liftgate opener switch Ⓐ (with Intelligent Key in liftgate range). The liftgate will individually unlock and open. Once the liftgate is closed, the vehicle will remain in the unlock status. To lock the liftgate, push the liftgate request switch Ⓑ (with the Intelligent Key in liftgate operation range) or press the button on the Intelligent Key.
- The Intelligent Key button (if so equipped) must be held for 1 second before the liftgate opens.
- The liftgate must be unlocked to open it with the liftgate opener switch Ⓐ and without the Intelligent Key in liftgate range.
- The switch on the liftgate Ⓐ can only be used to open the liftgate if the Power Back Door feature is switched to ON using the "Vehicle Settings" menu in the vehicle information display. For additional information, see "Vehicle information display 7 inch (18 cm) Type A" (P. 2-24) or "Vehicle information display 12.3 inch (31 cm) Type B" (P. 2-49).

A warning chime will sound if the shift position is moved out of P (Park) during a power open operation.

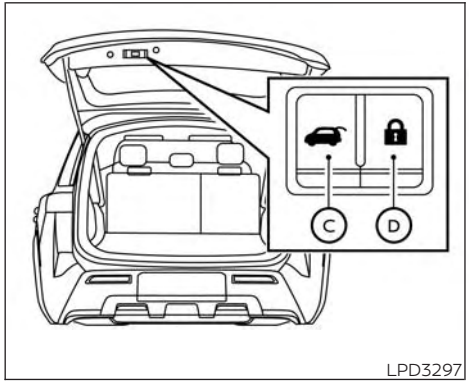

Liftgate close switch

Power Close:
The power liftgate automatically moves from the fully open position to the secondary position. When the liftgate reaches the secondary position, the cinching motor engages and pulls the liftgate to its primary latch position. Power close takes approximately 7 – 10 seconds. The power close feature can be activated by the button on the Intelligent Key (if so equipped), the instrument panel, the liftgate close switch Ⓒ and the liftgate lock switch Ⓓ. A chime sounds to indicate the power close sequence has been started.

- If the liftgate opener switch Ⓐ is activated while the cinching motor is engaged, the cinching motor will disengage and release the latch.
- The Intelligent Key button (if so equipped) must be held for 1 second before the liftgate closes.
- The liftgate close switch Ⓒ can only be used to close the liftgate if the power liftgate main switch is in the ON position.
- If the liftgate lock switch Ⓓ is activated the liftgate will begin to close and all doors will lock.

Stop - Reverse:
During an open/close movement, the liftgate can be stopped, if the Intelligent Key button (if so equipped), instrument panel or liftgate opener switch Ⓐ, liftgate close switch Ⓒ or liftgate lock switch Ⓓ is pushed. The liftgate can be reversed if the Intelligent Key button (if so equipped), instrument panel, liftgate opener switch Ⓐ or liftgate lock switch Ⓓ is pushed again.

Auto Reverse:
If an obstacle is detected during power open or power close, a warning chime will sound and the liftgate will reverse direction and return to the full open or full close position.

A pinch strip is mounted on each side of the liftgate. If an obstacle is detected by a pinch strip during power close, the liftgate will reverse direction and return to the full open position.

NOTE:

If the pinch strip is damaged or removed, the power close function will not operate.

⚠WARNING

There are some small distances immediately before the closed position which cannot be detected. Make sure that all passengers have their hands, etc., inside the vehicle before closing the liftgate.

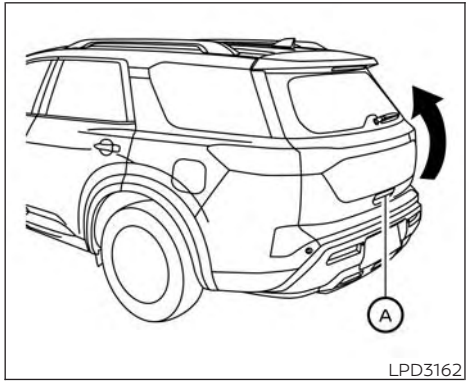

Manual Mode:
If power operation is not available, the liftgate may be operated manually. Power operation may not be available if multiple obstacles have been detected in a single power cycle or if battery voltage is low.

If the power liftgate opener switch Ⓐ is pushed during power open or close, the power operation will be canceled and the liftgate can be operated manually.

To open the liftgate manually, push the liftgate opener switch Ⓐ and lift the liftgate.

To close, lower and push the liftgate down securely.

MOTION-ACTIVATED LIFTGATE (if so equipped)

The liftgate can be operated using a quick kicking motion under the center of the rear bumper.

To operate, the Intelligent Key must be within 80 cm (31.5 in) of the liftgate.

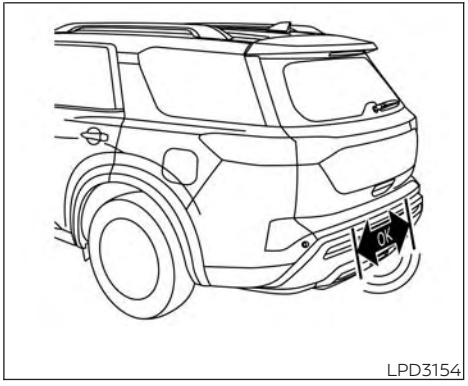

Activation zone

Proper operation technique

- While at the rear of the vehicle, begin making a quick forward kicking motion.
- Raise your foot straight under the center of the rear bumper then immediately return your foot to the ground in a continuous motion.
- The kicking motion should be straight, smooth and consistent.
- After your kick motion is complete, step back and allow the liftgate to open/close.
- Three beeps will sound and the liftgate will begin moving within two seconds after the kick.

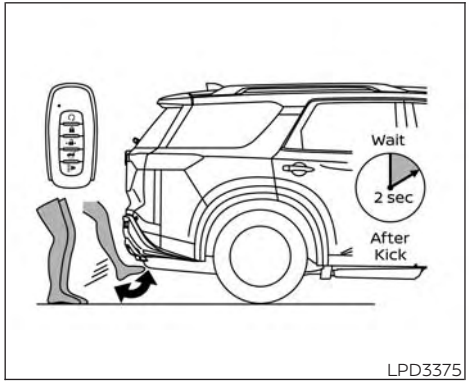

LPD3375

DO: Quick forward kick and return while the key fob is within range

⚠ CAUTION

Before performing the kicking motion, steady your stance to prevent any loss of balance. Also, while making the kicking motion, take caution around hot exhaust system parts. Otherwise, there may be danger of injury.

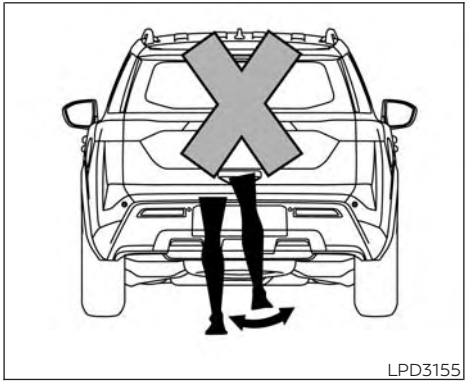
LPD3155

DO NOT: Swing foot side to side or pause during kick

⚠ WARNING

Prevent unintentional liftgate opening/closing. There may be conditions when opening/closing the liftgate is not desired. Keep the Intelligent Key out of range of the liftgate, (31.5 in or 80 cm), when washing or working around the back of the vehicle.

⚠ CAUTION

- **Interference or malfunction can be caused by parking in close proximity to radio or satellite towers.**
- **Intelligent Key interference could be caused if you have your key fob stored next to your cell phone or any RF-enabled smart card. For additional information, see "NISSAN Intelligent Key® system" (P. 3-7).**

LIFTGATE RELEASE

⚠ WARNING

- **Always be sure the liftgate has been closed securely to prevent it from opening while driving.**
- **Do not drive with the liftgate open. This could allow dangerous exhaust gases to be drawn into the vehicle. For additional information, see "Exhaust gas (carbon monoxide)" (P. 5-6).**
- **To avoid personal injury, do not attempt to activate the power liftgate if one or both of the liftgate struts are removed.**

⚠CAUTION

- **If the power liftgate does not stay open or if the liftgate unexpectedly closes at any time while a continuous warning chime sounds, do not operate the liftgate. There may be a pressure loss in one or both of the liftgate struts. It is recommended that you have the liftgate inspected. It is recommended that you visit a NISSAN dealer for this service.**
- **Do not activate the power liftgate if one or both of the liftgate struts are removed. Damage to the liftgate or power liftgate mechanisms may occur.**

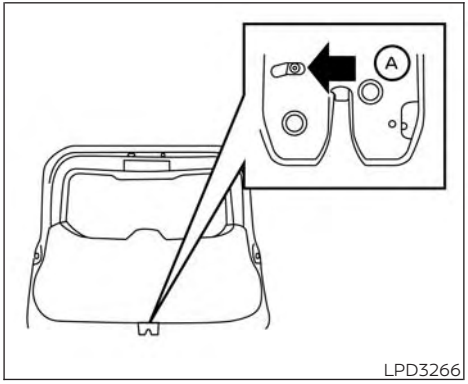

LPD3266

Liftgate release (manual and power)

If the liftgate cannot be opened with the instrument panel switch, liftgate opener switch or key fob due to a discharged battery, follow these steps:

1. Move the lever Ⓐ as illustrated to open the liftgate.

It is recommended that you visit a NISSAN dealer as soon as possible for repair.

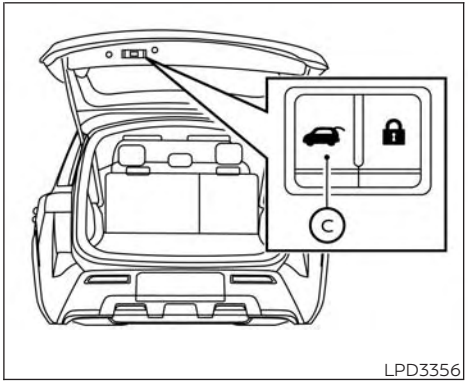

LPD3356

LIFTGATE POSITION SETTING (if so equipped)

The liftgate can be set to open to a specific height by performing the following:

1. Open the liftgate using the liftgate opener switch or the Intelligent Key.
2. Pull the liftgate down to the desired position and hold the liftgate (the liftgate will have some resistance when being manually adjusted).

3. While holding the liftgate in position, push and hold the liftgate switch Ⓒ located on the liftgate for approximately 5 seconds or until two beeps are heard.

The liftgate will open to the selected position setting. To change the position of the liftgate, repeat steps 1-3 for setting the position of the liftgate.

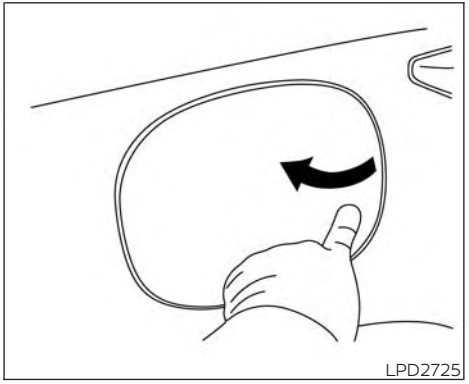
LPD2725

OPENING THE FUEL-FILLER DOOR

This vehicle is equipped with a locking fuel lid that is connected to the driver side door lock switch.

Before attempting to open fuel-filler door, first unlock driver side door lock either by using key fob or the door unlock switch located on the driver side door inside the vehicle.

To open the fuel-filler door, push the right side of the fuel-filler door to release.

⚠WARNING

- **Gasoline is extremely flammable and highly explosive under certain conditions. You could be burned or seriously injured if it is misused or mishandled. Always stop the engine and do not smoke or allow open flames or sparks near the vehicle when refueling.**
- **Do not attempt to top off the fuel tank after the fuel pump nozzle shuts off automatically. Continued refueling may cause fuel overflow, resulting in fuel spray and possibly a fire.**
- **Never pour fuel into the throttle body to attempt to start your vehicle.**
- **Do not fill a portable fuel container in the vehicle or trailer. Static electricity can cause an explosion of flammable liquid, vapor or gas in any vehicle or trailer. To reduce the risk of serious injury or death when filling portable fuel containers:**
  - **Always place the container on the ground when filling.**
  - **Do not use electronic devices when filling.**

- **Keep the pump nozzle in contact with the container while you are filling it.**
- **Use only approved portable fuel containers for flammable liquid.**

⚠ CAUTION

- **Do not use a fuel containing more than 15% ethanol in your vehicle. For additional information, see "Fuel information" (P. 9-5).**
- **For additional information, see "Malfunction Indicator Light (MIL)" (P. 2-21).**
- **If fuel is spilled on the vehicle body, flush it away with water to avoid paint damage.**

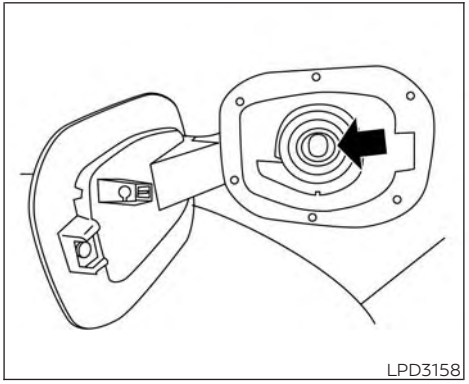
LPD3158

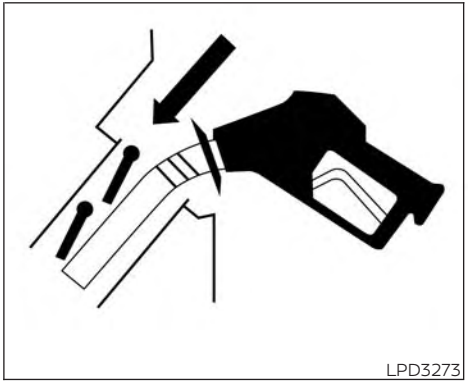
LPD3273

HOW TO REFUEL

The fuel tank is not equipped with a fuel filler cap. After opening the fuel-filler door, insert the fuel pump nozzle directly into the fuel-filler opening. When the fuel pump nozzle is pulled out, the fuel filler opening will be sealed.

To refuel:

Be sure to insert the fuel pump nozzle slowly in to the fuel-filler opening as far as it will go before fueling.

Never move the nozzle during the refueling.

Pull out the nozzle approximately 5 seconds after the fuel pump nozzle shuts off automatically (initial shut-off).

Close the fuel-filler door after refueling.

If you need to refuel from a portable fuel container, use the funnel supplied with your vehicle. (See "When refueling from a portable fuel container" (P. 3-34).)

⚠ CAUTION

- **Do not attempt to open the flaps on the fuel-filler opening using any tool other than the fuel pump nozzle.**
- **This fuel-filler opening is only conformable to normal fuel pump nozzles at gas stations. Using a nozzle with a small diameter may damage the opening and the fuel system.**
- **If fuel is spilled on the vehicle body, flush it away with water to avoid paint damage.**

⚠ WARNING

- **Gasoline is extremely flammable and highly explosive under certain conditions. You could be burned or seriously injured if it is misused or mishandled. Always stop the engine and do not smoke or allow open flames or sparks near the vehicle when refueling.**
- **Do not attempt to top off the fuel tank after the fuel pump nozzle shuts off automatically. Continued refueling may cause fuel overflow, resulting in fuel spray and possibly a fire.**
- **Never pour fuel into the throttle body to attempt to start your vehicle.**
- **Do not fill a portable fuel container in the vehicle or trailer. Static electricity can cause an explosion of flammable liquid, vapor or gas in any vehicle or trailer. To reduce the risk of serious injury or death when filling portable fuel containers:**
  - **Always place the container on the ground when filling.**
  - **Do not use electronic devices when filling.**
  - **Keep the pump nozzle in contact with the container while you are filling it.**
  - **Use only approved portable fuel containers for flammable liquid.**

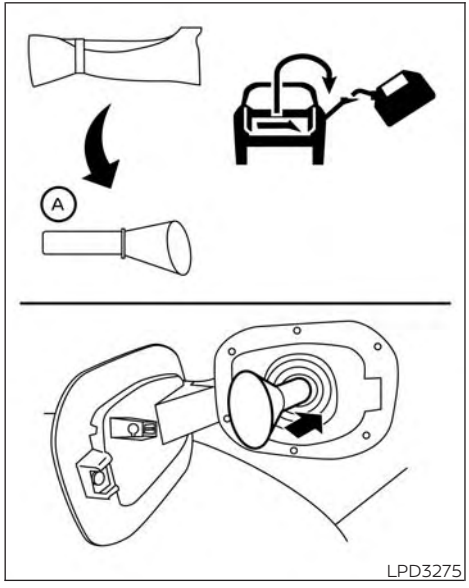

WHEN REFUELING FROM A PORTABLE FUEL CONTAINER

If you need to refuel from a portable fuel container, use the funnel Ⓐ stored in the tool bag (located under the luggage board).

Be sure to insert the funnel into the fuel-filler opening slowly and fully. Insert the nozzle of the portable fuel container into the opening along the funnel and fill the fuel tank.

After refueling, remove the funnel from the fuel-filler opening. Wipe the funnel clean and return it to the tool bag.

⚠ CAUTION

- **Do not insert the nozzle of the portable fuel container directly into the fuel-filler opening. Doing so may damage the opening and the fuel system.**
- **Use only the funnel provided with your vehicle. Otherwise the fuel-filler opening and the fuel system may be damaged.**

⚠ WARNING

- **Do not adjust the steering wheel while driving. You could lose control of your vehicle and cause an accident.**
- **Do not adjust the steering wheel any closer to you than is necessary for proper steering operation and comfort. The driver's air bag inflates with great force. If you are unrestrained, leaning forward, sitting sideways or out of position in any way, you are at greater risk of injury or death in a crash. You may also receive serious or fatal injuries from the air bag if you are up against it when it inflates. Always sit back against the seatback and as far away as practical from the steering wheel. Always use the seat belts.**

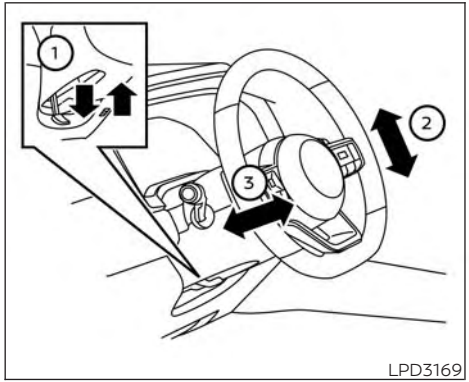

LPD3169

MANUAL OPERATION (if so equipped)

Tilt and telescopic operation

Push the lock lever ① down:

- Adjust the steering wheel up or down in direction ② to the desired position.
- Adjust the steering wheel forward or backward in direction ③ to the desired position.

Pull the lock lever ① up firmly to lock the steering wheel in place.

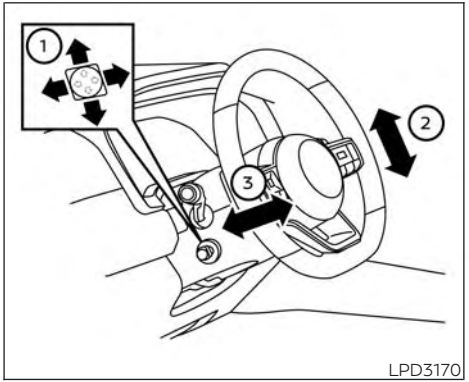

LPD3170

AUTOMATIC OPERATION (if so equipped)

Tilt and telescopic operation

To adjust the steering wheel move the switch ① in the following directions:

- Adjust the steering wheel up or down in direction ② to the desired tilt position.
- Adjust the steering wheel forward or backward in direction ③ to the desired telescopic position.

⚠ CAUTION

For vehicles with memory seat: Failure to reset the tilt and telescoping functions of the steering wheel, after the vehicle's battery has been discharged, may prevent the steering wheel position from being adjusted.

For vehicles with memory seat: Both the tilt and telescopic steering operation must be reset after the vehicle's battery has been discharged in order to prevent the tilt and telescopic operation from locking in one position. When the battery has been recharged or replaced, perform the following:

- For tilt operation: Adjust the switch ① so the steering wheel moves to the highest position ② that can be reached.
- For telescopic operation: Adjust the switch ① so the steering wheel moves to the most forward and backward position ③ that can be reached.

Performing these operations resets the range of the steering wheel's tilt and telescopic function.

Entry/Exit function

The memory seat will make the steering wheel move up automatically when the driver's door is opened and the ignition switch is in the LOCK position. This lets the driver get into and out of the seat more easily. The steering wheel moves back into position when the driver's door is closed and the ignition switch is pushed.

For additional information, see "Memory seat" (P. 3-47).

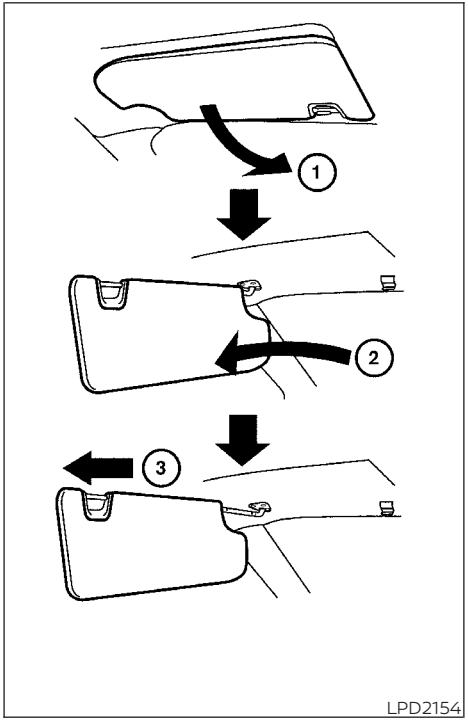

LPD2154

1. To block glare from the front, swing down the sun visor ①.
2. To block glare from the side, remove the sun visor from the center mount and swing the visor to the side ②.
3. Slide the sun visor extension ③ in or out as needed.

⚠ CAUTION

- **Do not store the sun visor before returning the extension to its original position.**
- **Do not pull the extension sun visor forcedly downward.**

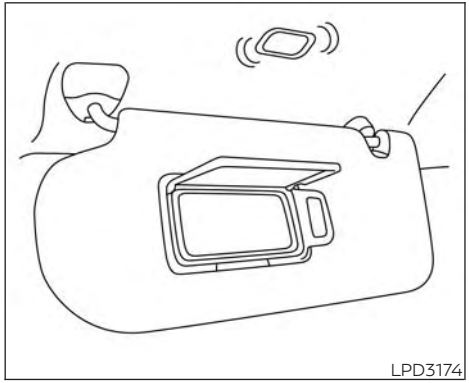
LPD3174

VANITY MIRRORS

To access the vanity mirror, pull the sun visor down and flip open the mirror cover. The vanity mirror will illuminate when the mirror cover is open.

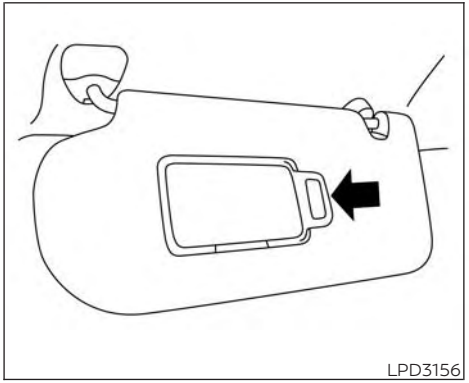
LPD3156

Driver's and passenger's side

CARD HOLDER

To use the card holder, slide card into the clip. Do not view information while operating the vehicle.

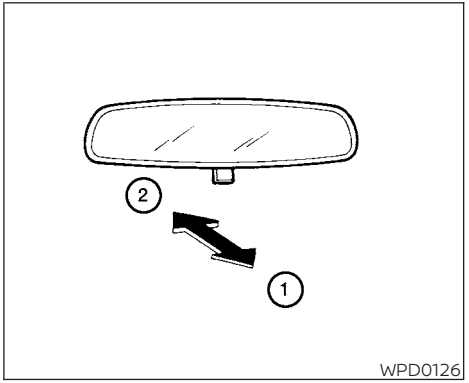

WPD0126

MANUAL ANTI-GLARE REARVIEW MIRROR (if so equipped)

Use the night position ① to reduce glare from the headlights of vehicles behind you at night.

Use the day position ② when driving in daylight hours.

⚠WARNING

Use the night position only when necessary, because it reduces rear view clarity.

AUTOMATIC ANTI-GLARE REARVIEW MIRROR (if so equipped)

The inside mirror is designed so that it automatically dims during nighttime conditions and according to the intensity of the headlights of the vehicle following you. The automatic anti-glare feature is activated when the ignition switch is in the ON position.

NOTE:

Do not hang any objects over the sensors ① or apply glass cleaner to the sensors. Doing so will reduce the sensitivity of the sensors, resulting in improper operation.

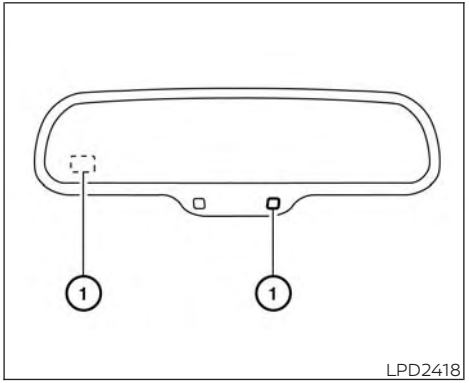

LPD2418

Type A (if so equipped)

The inside mirror is designed so that it automatically dims during night time conditions and according to the intensity of the headlights of the vehicle following you. The automatic anti-glare feature is activated when the ignition switch is in the ON position.

NOTE:

Do not hang any objects over the sensors ① or apply glass cleaner to the sensors. Doing so will reduce the sensitivity of the sensors, resulting in improper operation.

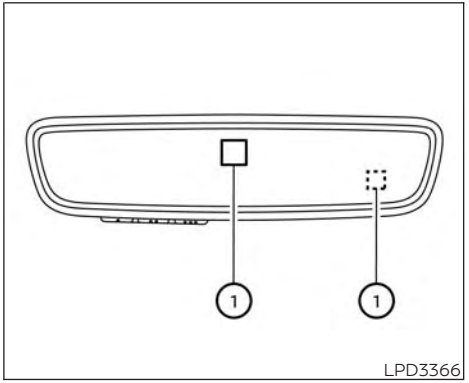

LPD3366

Type B (if so equipped)

The inside mirror is designed so that it automatically dims during nighttime conditions and according to the intensity of the headlights of the vehicle following you. The automatic anti-glare feature is activated when the ignition switch is in the ON position.

NOTE:

Do not hand any objects over the sensors ① or apply glass cleaner to the sensors. Doing so will reduce the sensitivity of the sensors, resulting improper operation.

For additional information on HomeLink® Universal Transceiver operation, see "HomeLink® Universal Transceiver (Type A)" (P. 2-128).

INTELLIGENT REAR VIEW MIRROR (if so equipped)

⚠ WARNING

Failure to follow the warnings and instructions for proper use of the Intelligent Rear View Mirror could result in serious injury or death.

- **The Intelligent Rear View Mirror is a convenience feature but it is not a substitute for proper vehicle operation. The system has areas where objects cannot be viewed. Check the blind spot of the Intelligent Rear View Mirror before vehicle operation. The driver is always responsible for safe driving.**
- **Do not disassemble or modify the Intelligent Rear View Mirror, the camera unit or wirings. If you do, it may result in accidents or fire. In case you notice smoke or smell coming from the Intelligent Rear View Mirror, stop using the system immediately. It is recommended that you see a NISSAN dealer for servicing.**
- **Do not operate the Intelligent Rear View Mirror while driving. Doing so can be a distraction and it could lose control of your vehicle and cause an accident or serious injury.**
- **Do not gaze into the Intelligent Rear View Mirror display during driving. It may cause a distraction and it could lose control of your vehicle and cause an accident or serious injury.**
- **Do not put a cigarette or flames to the Intelligent Rear View Mirror, the camera unit or wirings. It may cause a fire.**
- **Be sure to adjust the Intelligent Rear View Mirror before driving. Switch the system to the conventional rearview mirror mode and be properly seated on the driver's seat. Then adjust the mirror so as to see the rear window properly. Driving without adjusting the mirror may cause difficulty in watching the display at Intelligent Rear View Mirror (camera view mode) due to the reflection from the surface of the mirror.**
- **If the Intelligent Rear View Mirror malfunctions, immediately switch the system to the conventional rearview mirror mode.**
- **When strong light (for example, sunlight or high beams from following vehicles) enters the camera, a light beam or a glaring light may appear on the monitor screen of the Intelligent Rear View Mirror. In that case, switch the system to the conventional rearview mirror mode appropriately.**
- **If dirt, rain or snow accumulates on the exterior glass surface covering the camera, the Intelligent Rear View Mirror may not display object clearly. Use of the rear window wiper/washer may improve visibility, but if not, switch the Intelligent Rear View Mirror to the conventional rearview mirror mode until a time the glass covering the camera can be cleaned.**

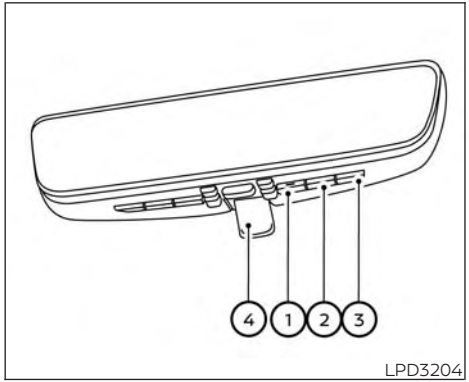

LPD3204

① MENU button
② Left button
③ Right button
④ Mode select lever

Components:
Intelligent Rear View Mirror provides a clear rearview from a camera located on the rear of the vehicle. Intelligent Rear View Mirror has two modes: conventional rearview mirror mode and Intelligent Rear View Mirror mode (camera view mode). You can switch these two modes by the mode select lever ④.

For additional information on HomeLink® Universal Transceiver (if so equipped) operation, see "HomeLink® Universal Transceiver (Type B)" (P. 2-133).

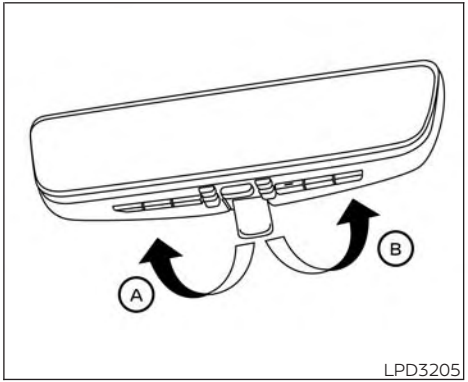

LPD3205

How to change the mode:
The mode can be switched when the ignition switch is in the ON position.

- Pull the mode select lever Ⓐ to switch to the Intelligent Rear View Mirror mode (camera view mode).
- Push the mode select lever Ⓑ to switch to the conventional rearview mirror mode.

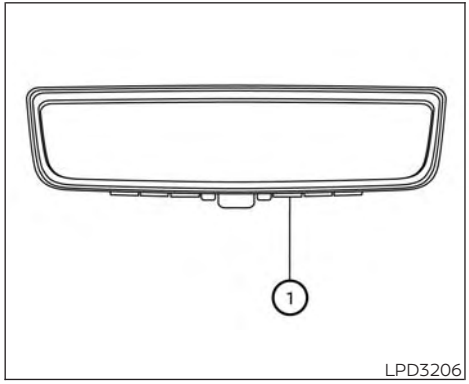

LPD3206

How to make settings of Intelligent Rear View Mirror:

You can choose display settings of the Intelligent Rear View Mirror such as brightness, camera angle, textual indication ON or OFF and language. When the Intelligent Rear View Mirror mode is on, setting menu can be selected by pushing the MENU button ①. Each time the MENU button ① is pushed, the setting menu will change as follows:

MENU (initial screen) → BRIGHTNESS → DOWN/UP → LEFT/RIGHT → ROTATION → INDICATION → DIMMING MIRROR → LANGUAGE → MENU (initial screen)

NOTE:

To switch the image quality adjustment items with MENU button ①, push the button within 5 seconds after completing the adjustment of the previous item. If 5 seconds or more pass, the monitor will return to MENU (initial screen).

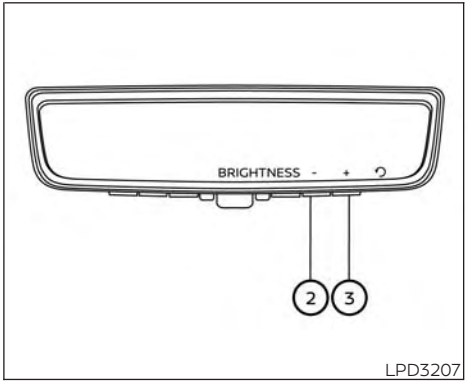

LPD3207

BRIGHTNESS

The brightness of the display screen can be adjusted.

- Push the left button ② to dim the screen.
- Push the right button ③ to brighten the screen.

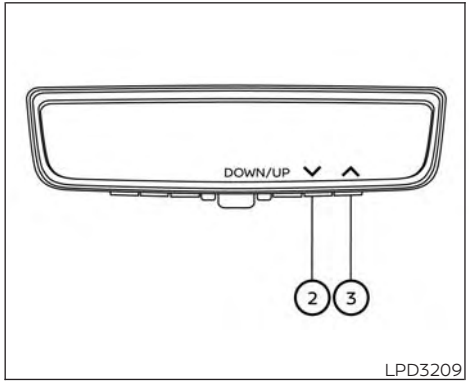

LPD3209

DOWN/UP
The vertical camera angle of the display screen can be adjusted.

- Push the left button ② to down the camera angle.
- Push the right button ③ to up the camera angle.

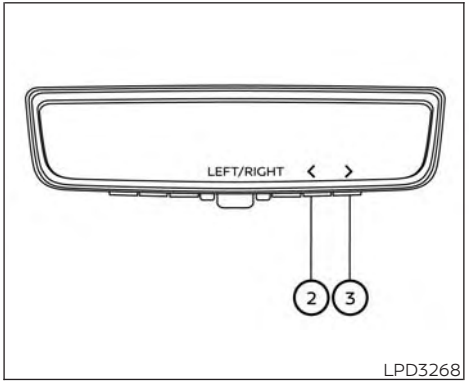

LPD3268

LEFT/RIGHT
The horizontal camera angle of the display screen can be adjusted.

- Push the left button ② to pan the camera angle left.
- Push the right button ③ to pan the camera angle right.

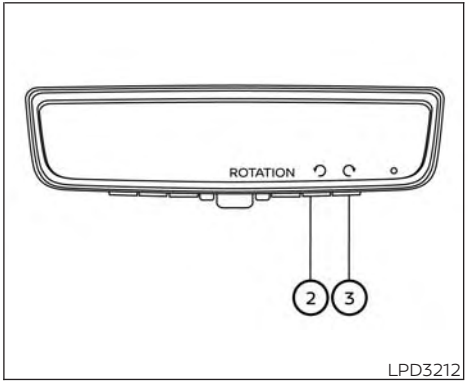

LPD3212

ROTATION
The camera angle of the display screen can be rotated.

- Push the left button ② to rotate the camera angle to the left.
- Push the right button ③ to rotate the camera angle to the right.

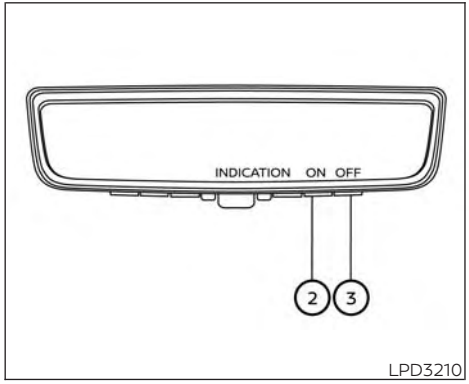

INDICATION

The textual indication can be turned on or off on the Intelligent Rear View Mirror display screen.

- Push the right button ③ to disable the textual indication on the display screen.
- Push the left button ② to enable the textual indication on the display screen.

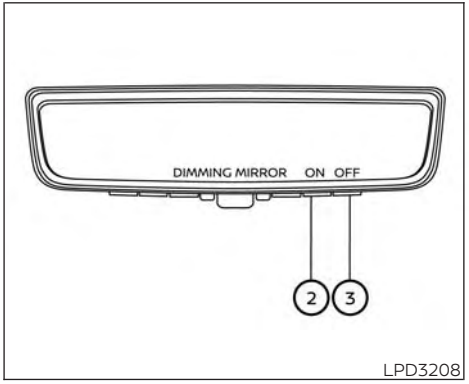

DIMMING MIRROR

The mirror is designed so that it automatically changes reflection according to the intensity of the headlights of the following vehicle. You can enable or disable the automatic anti-glare mode.

- Push the left button ② to enable the automatic anti-glare mode.
- Push the right button ③ to disable the automatic anti-glare mode.

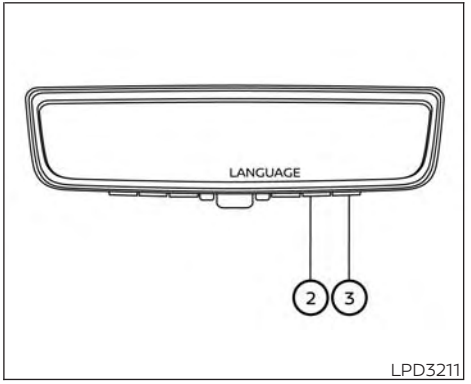

LANGUAGE

The language of textual indication can be selected on the Intelligent Rear View Mirror display screen. Select the language by using the ② or ③ button. You can select one of the available languages. The language setting will be retained even if the engine is restarted.

Intelligent Rear View Mirror system precautions:

NOTE:

- **Long-term use of this system while the engine is stopped may cause the battery to be discharged.**
- **Do not attach an antenna of wireless device near the Intelligent Rear View Mirror. Electric wave from wireless device may cause disturbed image in Intelligent Rear View Mirror.**
- **Do not push buttons excessively or operate the lever roughly as it may cause the Intelligent Rear View Mirror itself to drop.**
- **Never turn the body of the Intelligent Rear View Mirror by 90° or more. It may damage the Intelligent Rear View Mirror.**
- **Do not apply strong shocks to the body of Intelligent Rear View Mirror. It may cause a system failure.**
- **Do not apply heavy load to the camera and camera-cover on the rear of the vehicle. It may cause the camera to be removed or may cause a system failure.**
- **If it is difficult to see the Intelligent Rear View Mirror display screen because of a strong external light, switch the mode to the conventional rearview mirror mode for better use.**
- **Close the sunshade (if so equipped) when the Intelligent Rear View Mirror display screen is unclear due to the strong external light.**
- **When LED headlights are viewed on the Intelligent Rear View Mirror display, the images may flicker. This is normal.**
- **Due to diffuse reflection from external environment, images on the screen may flicker. This is not a malfunction.**
- **A quick movement of an object may not be able to display on the camera view screen. This is not a malfunction.**
- **Turn on the headlights at twilight or in a tunnel, etc.**
- **The Intelligent Rear View Mirror mode (camera view mode) display is different from the conventional rearview mirror. Objects in the display may differ from actual distance. Do not solely rely on the Intelligent Rear View Mirror. Always rely on your own operation to avoid accidents.**
- **Eyestrain may occur if the brightness of the camera view display is adjusted to an excessively bright level. Adjust the brightness properly to avoid eyestrain.**
- **Use the rear window wiper when it rains. If the camera view image is still unclear when the rear window wiper is in operation, check the deterioration of the rear window wiper blade.**
- **When using the rear window wiper, image on the screen may flicker. This is not a malfunction.**
- **Defog rear window with defogger when rear window is fogged. Use the conventional rearview mirror mode until the rear window is fully defogged.**
- **The display of the Intelligent Rear View Mirror may become hot. This is not a malfunction.**
- **The color of an object in the distance or in the dark may be difficult to recognize. This is not a malfunction.**

System maintenance (Intelligent Rear View Mirror):

- Always keep the mirror and camera area of the rear window clean.
- Clean the mirror and the camera lens with dry soft cloth.
- When cleaning the camera area of the rear window, use a soft cloth dampened with a little neutral detergent. Dry with a soft cloth.
- If the image on the Intelligent Rear View Mirror display screen is still unclear even after cleaning the camera area of the rear window, an oil film may be adhering to the rear window glass. Clean the rear window glass with an oil film remover.
- Never use alcohol, benzine, thinner, or any similar material to clean the mirror or camera lens. It will cause a discoloration, deterioration or a system malfunction.
- Do not attach a sticker (including transparent material) on the camera area of the rear window.

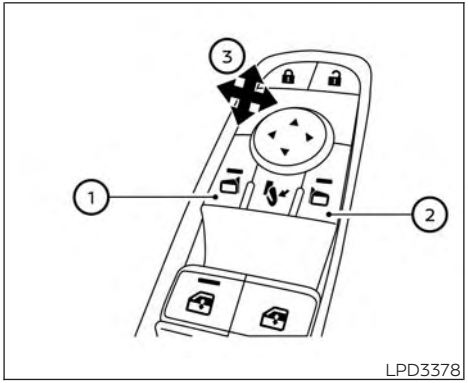

LPD3378

OUTSIDE MIRRORS

The outside mirror remote control will operate only when the ignition switch is in the ACC or ON position.

Push the switch ① or ② to select the left or right mirror. Adjust each mirror to the desired position using the large switch ③. Push the switch ① or ② and make sure that the corresponding light is off, to prevent accidentally moving the mirror.

⚠WARNING

- **Objects viewed in the outside mirror on the passenger side are closer than they appear. Be careful when moving to the right. Using only this mirror could cause an accident. Use the inside mirror or glance over your shoulder to properly judge distances to other objects.**
- **Do not adjust the mirrors while driving. You could lose control of your vehicle and cause an accident.**

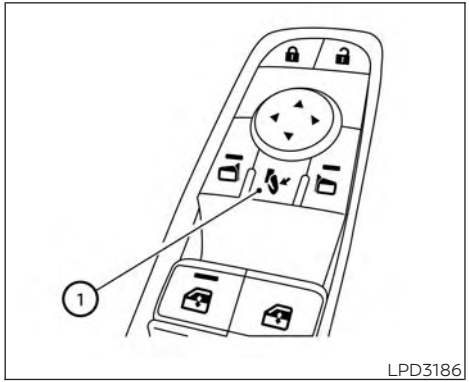

Power folding outside mirrors

⚠CAUTION

- **Do not touch the mirrors while they are moving. Your hand may be pinched, and the mirror may malfunction.**
- **Do not drive with the mirrors stored. You will be unable to see behind the vehicle.**

Push the switch ① to open the mirrors. Push the switch again to close the mirrors.

If one of the mirrors are manually operated or bumped, the mirror body can become loose at the pivot point. To correct electronic mirror operation, cycle the mirrors by pushing the switch ① until completely closed, then push the switch again until the mirrors are in the open position

Heated mirrors

The electric control type outside mirrors can be heated to defrost, defog, or de-ice for improved visibility. For additional information, see "Rear window and outside mirror defogger switch" (P. 2-83).

Reverse tilt-down feature (if so equipped)

The reverse tilt-down feature will turn the corresponding outside mirror surface downward when the mirror control switch is in the L or R position. This provides better rear visibility close to the vehicle.

The mirrors automatically return to their original position when you shift out of R (Reverse).

The outside mirror surfaces will return to their original position when one of the following conditions has occurred:

- The shift lever is moved to any position other than R (Reverse).
- The outside mirror control switch is not set to the left or right positions.
- The ignition switch is placed in the OFF position.

The reverse tilt position can be changed. While in R (Reverse), adjust the glass position to the desired location. The next time the vehicle is shifted into R (Reverse), the glass position will go to the newly set position. Additionally, the changed reverse tilt position can be saved to a memory seat position. After the reverse tilt glass position has been changed, vehicle is shifted back into park and glass has returned to the original position, push the Set switch and press the desired memory switch (1 or 2) to assign the new reverse tilt position memory.

NOTE:

If the outside mirror control switch is not in the left or right positions, the mirror surface will NOT turn downward when the shift lever is moved to R (Reverse).

For additional information, see "Memory seat" (P. 3-47).

The memory seat system has three features:

- Memory storage function (Key-link)
- Memory storage function (Switch)
- Entry/exit function

Key-link, when enabled, automatically retains the driver's last seat, automatic steering wheel, and outside mirror positions for that specific key when the ignition is positioned from ON to OFF.

Each memory switch button (1 or 2) on the driver's door can also store one additional position which is independent of the key-linked position.

MEMORY STORAGE FUNCTION (key-link)

Use the following process to setup key-link:

1. Unlock the vehicle with the desired Intelligent Key while the ignition is OFF.
2. Place the ignition in the ON position or start the engine.
3. Within the settings menu of the touch screen display, select "Edit User" and then "Synch Profile with Intelligent Key".
4. Turn "Synch Profile with Intelligent Key" ON. The ON button will light up.
5. Within the settings menu of the touch screen display, select "Edit User" and then "User Profiles".
6. Create a personal profile and make sure the correct key number is selected with the arrow.
7. Set the desired seat, steering and mirror positions.
8. Place the ignition switch in the OFF position and lock the vehicle with the Intelligent Key.

Once Step 8 is completed, every time the vehicle is unlocked using the Intelligent Key and the ignition is switched placed in the ON position, the memory positions will be recalled.

For additional information, see the "NissanConnect® Owner's Manual.

Follow the same procedure if you want to link the 2nd, 3rd or 4th Intelligent Key.

NOTE:

If new memory positions are set prior to turning the ignition from ON to OFF, the previously linked memory positions for the respective key will be overwritten by new positions.

Recalling Intelligent Key memory positions

If the "Key-Linked Settings" are enabled in the vehicle information display for that particular key, every time you enter the vehicle the driver's seat, automatic steering wheel, and outside mirrors will automatically move to the driver's last position of the respective Intelligent Key.

NOTE:

The key-linked memory positions can be different from the positions stored in the memory switch (1 or 2).

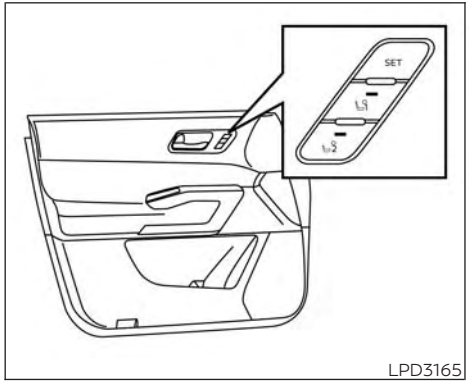

MEMORY STORAGE FUNCTION (switch)

Two positions for the driver's seat, steering wheel and outside mirrors can be stored in the memory seat system. Follow these procedures to use the memory system.

1. Place the ignition in the ON or ACC position (the vehicle should be stopped while setting the memory).
2. Adjust the driver's seat, steering wheel and outside mirrors to the desired positions by manually operating each adjusting switch. For additional information, see "Seats" (P. 1-2), "Steering wheel" (P. 3-34) and "Outside mirrors" (P. 3-45).
3. Push the SET switch and, within 5 seconds, push the memory switch (1 or 2).
4. The indicator light for the pushed memory switch will come on and stay on for approximately 5 seconds.
5. The chime will sound if the memory has been stored.

NOTE:

If a new memory position is stored in the same memory switch, the previous memory position will be overwritten by the new stored position.

Linking a key fob to a stored memory position

Each key fob can be linked to a stored memory position (memory switch 1 or 2) with the following procedure.

1. Follow steps 1-3 in the "Memory storage function" section for storing the memory position.
2. The indicator light for the pushed memory switch will come on. While the indicator light is on for 5 seconds, press the button on the key fob. The hazard lights will flash once and memory switch will click twice. After the indictor light goes off, the key fob is linked to that memory setting.

Once it is linked, when the ignition switch is in the OFF position, pressing the button on the key fob will move the driver's seat, steering wheel and outside mirrors to the linked memory switch position.

NOTE:

If a new memory position is stored in the linked memory switch, then the key fob will link the new position and overwrites the previous position.

Confirming memory storage

- Push the SET switch.
- If a memory position has been stored in the switch (1 or 2) then the indicator light for the respective switch will stay on for approximately 5 seconds.

ENTRY/EXIT FUNCTION

This system is designed so that the driver's seat and steering wheel will automatically move when the shift position is in the P (Park). This allows the driver to easily get in and out of the driver's seat.

The driver's seat will slide backward and the steering wheel will move up:

- When the driver's door is opened with the ignition switch in the OFF position.
- When the ignition switch is changed from ACC to OFF with the driver's door open.

The driver's seat and steering wheel will return to the previous position:

- When the ignition switch is changed from ACC or ON while the shift position is in the P (Park).

The entry/exit function can be adjusted or canceled through "Vehicle Settings" in the vehicle information display by performing the following:

- Switch the Exit Seat Slide from on to off.
- Switch the Exit Steering UP from on to off.

Restarting the entry/exit function

If the battery cable is disconnected or if the fuse opens, the stored memory positions may be lost and some of the functions will be restricted.

1. Drive the vehicle over 40 km/h (25 mph).

OR

2. Open and close the driver's door more than two times with the ignition switch in the OFF position.

The entry/exit function should now work properly.

SETTING MEMORY FUNCTION

The position of the following settings can be linked to the Intelligent Key and the memorized settings can be available for each Intelligent Key.

- Climate control system
- Audio system

To use the memory function, set the climate and audio systems to the driver's preferred settings. Lock the doors with the Intelligent Key. Each Intelligent Key may be set with the driver's individual preferences.

When a new Intelligent Key is used, "Connection with the key has been done" will be displayed on the vehicle information display and the memorized settings are available.

To engage the memorized settings, perform the following:

1. Carry the Intelligent Key that is linked to the memorized settings.
2. Unlock the doors by wrapping hand around the capacitive door handle or the button on the Intelligent Key.
3. Place the ignition switch in the ON position. The settings linked to the Intelligent Key will start.

For additional information on using the climate control system, see "Heater and air conditioner (automatic)" (P. 4-33).

SYSTEM OPERATION

The memory seat system will not work or will stop operating under the following conditions:

- When the vehicle speed is above 7 km/h (4 mph).
- When any of the memory switches are pushed while the memory seat system is operating.
- When the switch for the driver's seat and steering column is pushed while the memory seat system is operating.
- When the seat has already been moved to the memorized position.
- When no seat position is stored in the memory switch.
- When the shift position is moved from P (Park) position to any other position.

4 Monitor, climate, audio, phone and voice recognition systems

NissanConnect® Owner's Manual 4-2
RearView Monitor (if so equipped) 4-3
RearView Monitor system operation 4-4
How to read the displayed lines 4-5
Difference between predicted and actual distances 4-5
How to park with predicted course lines 4-7
Adjusting the screen 4-8
How to turn on and off predicted course lines 4-8
RearView Monitor system limitations 4-8
System maintenance 4-9
Intelligent Around View® Monitor (if so equipped) 4-10
Intelligent Around View® Monitor system operation 4-11
Difference between predicted and actual distances 4-16
How to park with predicted course lines 4-17
How to switch the display 4-18
Adjusting the screen 4-19
Intelligent Around View® Monitor system limitations 4-20
System maintenance 4-22
Camera aiding parking sensor (sonar) (if so equipped) 4-22
Sonar system operation 4-23
Turning on and off the sonar function 4-24
Sonar system limitations 4-24
System maintenance 4-25
Moving Object Detection (MOD) (if so equipped) 4-26
MOD system operation 4-27
Turning MOD on and off 4-29
MOD system limitations 4-29
System maintenance 4-30
Vents 4-31
Heater and air conditioner (automatic) 4-32
Automatic operation 4-33
Manual operation 4-34
Operating tips 4-36
Rear automatic air conditioning system 4-37
Servicing air conditioner 4-39
Antenna 4-39
Roof Mounted Antenna 4-39
Car phone or CB radio 4-40
iPod®/iPhone® 4-40

NISSANCONNECT® OWNER'S MANUAL

Refer to the NissanConnect® Owner's Manual that includes the following information.

- NissanConnect® Services (if so equipped)
- Navigation system (if so equipped)
- Audio system
- Apple CarPlay®
- Android Auto™
- Bluetooth® Hands-Free Phone system
- Viewing information
- Other settings
- Voice recognition
- General system information

REARVIEW MONITOR (if so equipped)

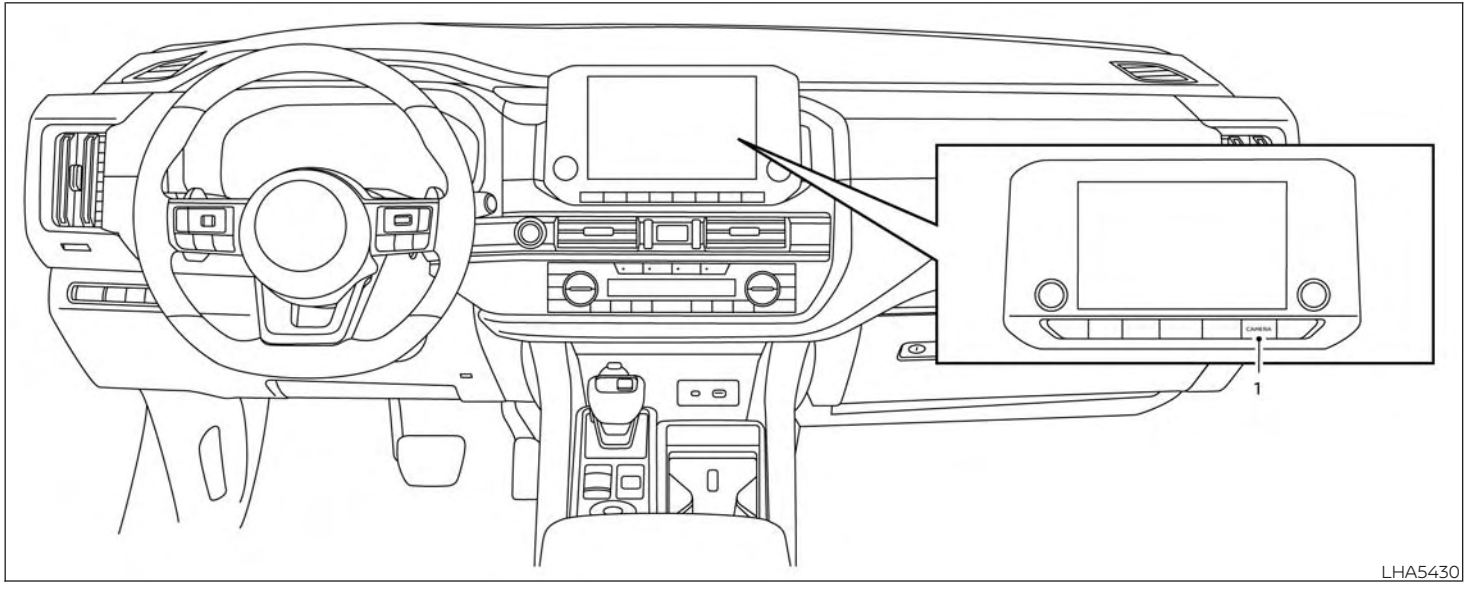

Left Hand Drive (LHD) shown, Right Hand Drive (RHD) similar

1. CAMERA button

⚠ WARNING

- **Failure to follow the warnings and instructions for proper use of the RearView Monitor system could result in serious injury or death.**
- **RearView Monitor is a convenience feature and is not a substitute for proper backing. Always turn and look out the windows and check mirrors to be sure that it is safe to move before operating the vehicle. Always back up slowly.**
- **The system is designed as an aid to the driver in showing large stationary objects directly behind the vehicle, to help avoid damaging the vehicle.**
- **The distance guide line and the vehicle width line should be used as a reference only when the vehicle is on a level paved surface. The distance viewed on the monitor is for reference only and may be different than the actual distance between the vehicle and displayed objects.**

⚠ CAUTION

Do not scratch the camera lens when cleaning dirt or snow from the front of the camera.

The RearView Monitor system automatically shows a rear view of the vehicle when the shift lever is shifted into the R (Reverse) position. The radio can still be heard while the RearView Monitor is active.

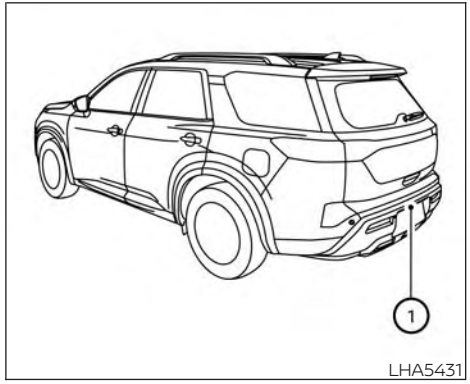

To display the rear view, the RearView Monitor system uses a camera located in the rear bumper ①.

REARVIEW MONITOR SYSTEM OPERATION

With the ignition switch in the ON position, move the shift lever to the R (Reverse) position to operate the RearView Monitor.

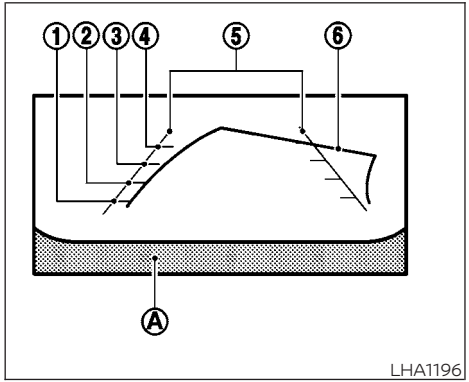

LHA1196

HOW TO READ THE DISPLAYED LINES

Guiding lines which indicate the vehicle width and distances to objects with reference to the vehicle body line Ⓐ are displayed on the monitor.

Distance guide lines

Indicate distances from the vehicle body.

- Red line ①: approx. 0.5 m (1.5 ft)
- Yellow line ②: approx. 1 m (3 ft)
- Green line ③: approx. 2 m (7 ft)
- Green line ④: approx. 3 m (10 ft)

Vehicle width guide lines ⑤

Indicate the vehicle width when backing up.

Predicted course lines ⑥

Indicate the predicted course when backing up. The predicted course lines will be displayed on the monitor when the shift lever is in the R (Reverse) position and the steering wheel is turned. The predicted course lines will move depending on how much the steering wheel is turned and will not be displayed while the steering wheel is in the straight-ahead position.

The vehicle width guide lines and the width of the predicted course lines are wider than the actual width and course.

DIFFERENCE BETWEEN PREDICTED AND ACTUAL DISTANCES

The displayed guidelines and their locations on the ground are for approximate reference only. Objects on uphill or downhill surfaces or projecting objects will be actually located at distances different from those displayed in the monitor relative to the guidelines (refer to illustrations). When in doubt, turn around and view the objects as you are backing up, or park and exit the vehicle to view the positioning of objects behind the vehicle.

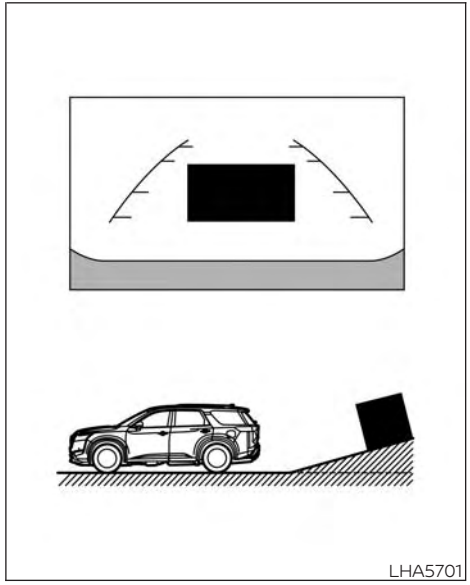
LHA5701

Backing up on a steep uphill

When backing up the vehicle up a hill, the distance guide lines and the vehicle width guide lines are shown closer than the actual distance. Note that any object on the hill is further than it appears on the monitor.

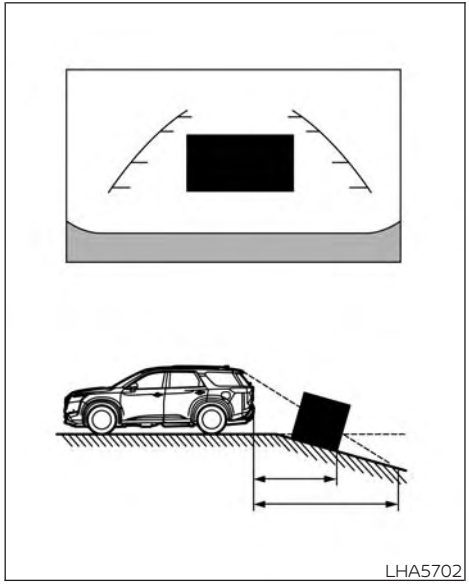

Backing up on a steep downhill

When backing up the vehicle down a hill, the distance guide lines and the vehicle width guide lines are shown farther than the actual distance. Note that any object on the hill is closer than it appears on the monitor.

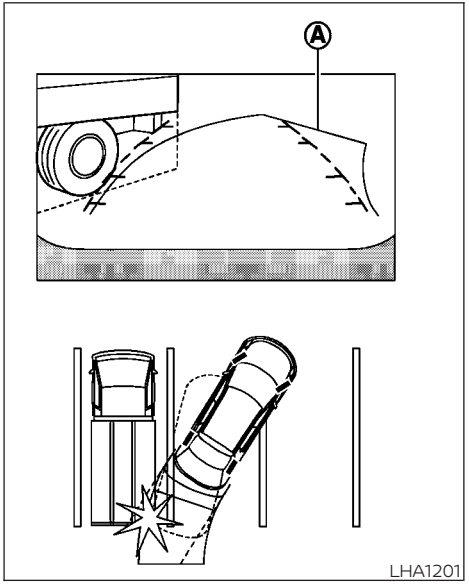

Backing up near a projecting object

The predicted course lines Ⓐ do not touch the object in the display. However, the vehicle may hit the object if it projects over the actual backing up course.

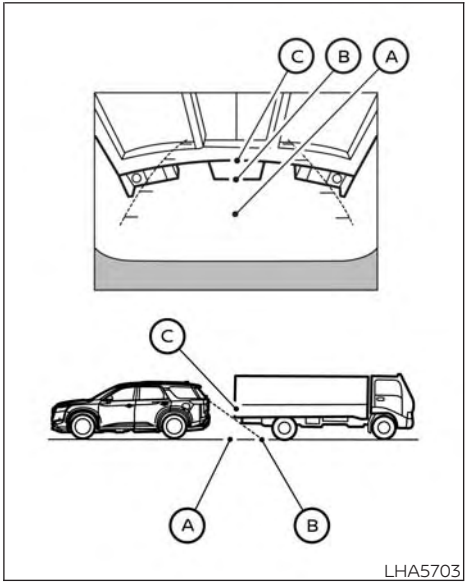

Backing up behind a projecting object

The position Ⓒ is shown farther than the position Ⓑ in the display. However, the position Ⓒ is actually at the same distance as the position Ⓐ. The vehicle may hit the

object when backing up to the position Ⓐ if the object projects over the actual backing up course.

HOW TO PARK WITH PREDICTED COURSE LINES

⚠ WARNING

- **If the tires are replaced with different sized tires, the predicted course lines may be displayed incorrectly.**
- **On a snow-covered or slippery road, there may be a difference between the predicted course line and the actual course line.**
- **If the battery is disconnected or becomes discharged, the predicted course lines may be displayed incorrectly. If this occurs, please perform the following procedures:**
  - **Turn the steering wheel from lock to lock while the engine is running.**
  - **Drive the vehicle on a straight road for more than 5 minutes.**
- **When the steering wheel is turned with the ignition switch in the ACC position, the predicted course lines may be displayed incorrectly.**

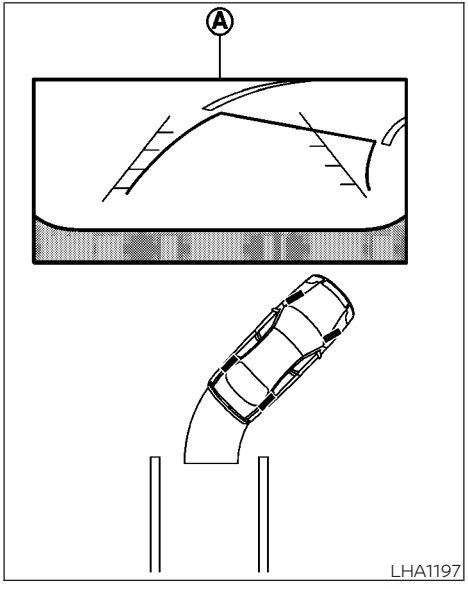

1. Visually check that the parking space is safe before parking your vehicle.
2. The rear view of the vehicle is displayed on the screen Ⓐ when the shift lever is moved to the R (Reverse) position.

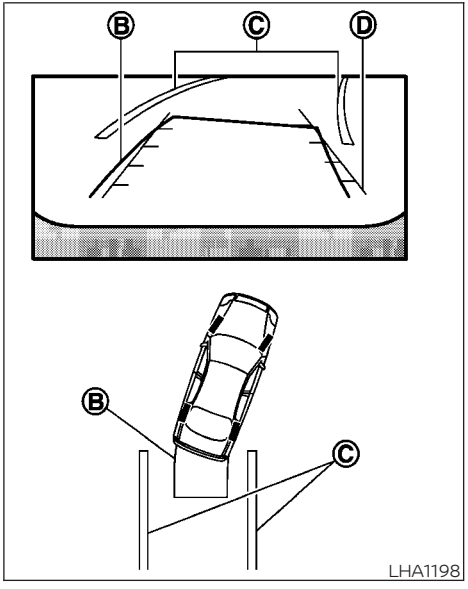

3. Slowly back up the vehicle adjusting the steering wheel so that the predicted course lines Ⓑ enter the parking space Ⓒ.

4. Maneuver the steering wheel to make the vehicle width guide lines Ⓓ parallel to the parking space Ⓒ while referring to the predicted course lines.
5. When the vehicle is parked in the space completely, move the shift position to the P (Park) position and apply the parking brake.

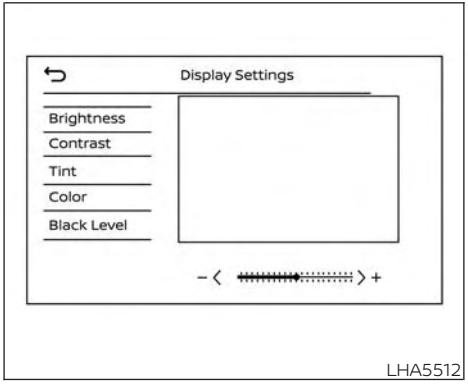

ADJUSTING THE SCREEN

1. Press the CAMERA button.
2. Touch the "Display Settings" key.
3. Touch the "Brightness", "Contrast", Tint", "Color", or "Black Level" key.
4. Adjust the item by touching the "+" or "–" key on the touch-screen display.

NOTE:

Do not adjust any of the display settings of the RearView Monitor while the vehicle is moving.

HOW TO TURN ON AND OFF PREDICTED COURSE LINES

To toggle on and off the predicted course lines while in the P (Park) position:

1. Press the CAMERA button.
2. Touch the "Predicted Course Lines" key to turn the feature on or off.

REARVIEW MONITOR SYSTEM LIMITATIONS

⚠WARNING

Listed below are the system limitations for RearView Monitor. Failure to operate the vehicle in accordance with these system limitations could result in serious injury or death.

- **The system cannot completely eliminate blind spots and may not show every object.**
- **Underneath the bumper and the corner areas of the bumper cannot be viewed on the RearView Monitor because of its monitoring range limitation. The system will not show small objects below the bumper, and may not show objects close to the bumper or on the ground.**

- **Objects viewed in the RearView Monitor differ from actual distance because a wide-angle lens is used.**
- **Objects in the RearView Monitor will appear visually opposite compared to when viewed in the rearview and outside mirrors.**
- **Use the displayed lines as a reference. The lines are highly affected by the number of occupants, fuel level, vehicle position, road conditions and road grade.**
- **Make sure that the liftgate is securely closed when backing up.**
- **Do not put anything on the rearview camera. The rearview camera is installed in the rear bumper.**
- **When washing the vehicle with high pressure water, be sure not to spray it around the camera. Otherwise, water may enter the camera unit causing water condensation on the lens, a malfunction, fire or an electric shock.**
- **Do not strike the camera. It is a precision instrument. Otherwise, it may malfunction or cause damage resulting in a fire or an electric shock.**

The following are operating limitations and do not represent a system malfunction:

- When the temperature is extremely high or low, the screen may not clearly display objects.
- When strong light directly shines on the camera, objects may not be displayed clearly.
- Vertical lines may be seen in objects on the screen. This is due to strong reflected light from the bumper.
- The screen may flicker under fluorescent light.
- The colors of objects on the RearView Monitor may differ somewhat from the actual color of objects.
- Objects on the monitor may not be clear in a dark environment.
- There may be a delay when switching between views.
- If dirt, rain or snow accumulate on the camera, the RearView Monitor may not display objects clearly. Clean the camera.
- Do not use wax on the camera lens. Wipe off any wax with a clean cloth dampened with a diluted mild cleaning agent, then wipe with a dry cloth.

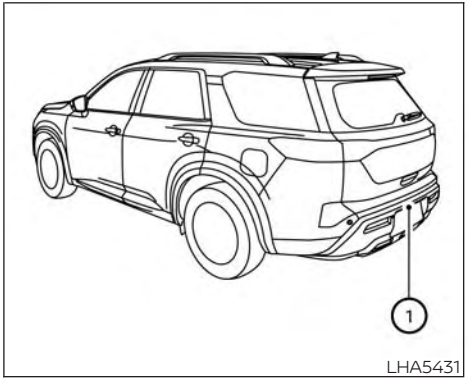

SYSTEM MAINTENANCE

⚠ CAUTION

- **Do not use alcohol, benzine or thinner to clean the camera. This will cause discoloration.**
- **Do not damage the camera as the monitor screen may be adversely affected.**

If dirt, rain or snow accumulates on the camera ①, the RearView Monitor may not display objects clearly. Clean the camera by wiping it with a cloth dampened with a diluted mild cleaning agent and then wiping it with a dry cloth.

INTELLIGENT AROUND VIEW® MONITOR (if so equipped)

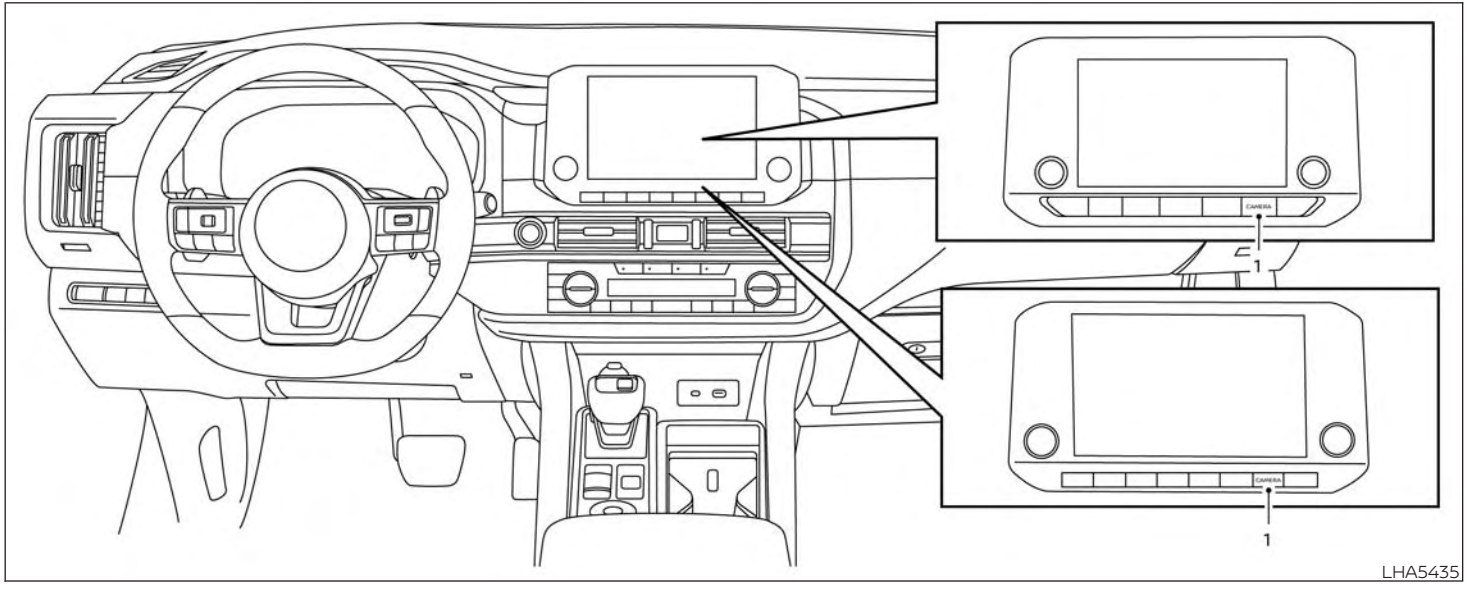

Left Hand Drive (LHD) shown, Right Hand Drive (RHD) similar

1. CAMERA button

⚠ WARNING

- **Failure to follow the warnings and instructions for the proper use of the Intelligent Around View® Monitor system could result in serious injury or death.**
- **The Intelligent Around View® Monitor is a convenience feature and is not a substitute for proper vehicle operation because it has areas where objects cannot be viewed. The four corners of the vehicle in particular, are areas where objects do not always appear in the bird's-eye, front, or rear views. Always check your surroundings to be sure that it is safe to move before operating the vehicle. Always operate the vehicle slowly.**
- **The driver is always responsible for safety during parking and other maneuvers.**

⚠ CAUTION

Do not scratch the camera lens when cleaning dirt or snow from the front of the camera.

The Intelligent Around View® Monitor system is designed as an aid to the driver in situations such as slot parking or parallel parking.

The monitor displays various views of the position of the vehicle in a split screen format. Not all views are available at all times.

Available views:

- Front View
  A view of the front of the vehicle.
- Rear View
  A view of the rear of the vehicle.
- Bird's-Eye View
  The surrounding view of the vehicle from above.
- Front-Side View
  The view around and ahead of the front passenger's side wheel.
- Front-Wide View
  A wider area view of the front view.
- Rear-Wide View
  A wider area view of the rear view.

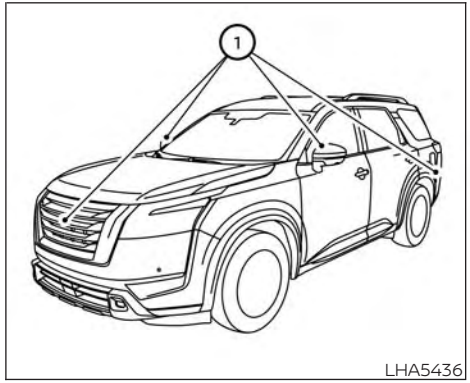

LHA5436

To display the multiple views, the Intelligent Around View® Monitor system uses cameras located in the front grille, on the vehicle's outside mirrors and in the rear bumper ①.

INTELLIGENT AROUND VIEW® MONITOR SYSTEM OPERATION

With the ignition switch in the ON position, move the shift lever to the R (Reverse) position or press the CAMERA button to operate the Intelligent Around View® Monitor.

When the camera is first activated with the bird's-eye view in the display, a red icon (if so equipped) will flash on the screen. This indicates that the sonar system is activated. For additional information, see "Front and Rear Sonar System (RSS)" (P. 5-237).

Available views

⚠ WARNING

- **The distance guide lines and the vehicle width lines should be used as a reference only when the vehicle is on a paved, level surface. The apparent distance viewed on the monitor may be different than the actual distance between the vehicle and displayed objects.**
- **Use the displayed lines and the bird's-eye view as a reference. The lines and the bird's-eye view are greatly affected by the number of occupants, cargo, fuel level, vehicle position, road condition and road grade.**
- **If the tires are replaced with different sized tires, the predicted course lines and the bird's-eye view may be displayed incorrectly.**
- **When driving the vehicle up a hill, objects viewed in the monitor are further than they appear. When driving the vehicle down a hill, objects viewed in the monitor are closer than they appear.**
- **Objects in the rear view will appear visually opposite compared to when viewed in the monitor and outside mirrors.**
- **Use the mirrors or actually look to properly judge distances to other objects.**
- **On a snow-covered or slippery road, there may be a difference between the predicted course lines and the actual course line.**
- **The vehicle width and predicted course lines are wider than the actual width and course.**

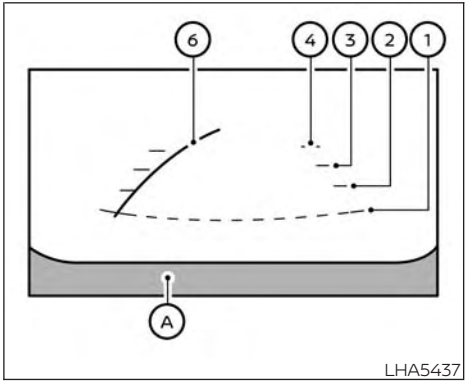

Front view

Front and rear view

Guiding lines that indicate the approximate vehicle width and distance to objects with reference to the vehicle body line Ⓐ are displayed on the monitor.

Distance guide lines

Indicate distances from the vehicle body:

- Red line ①: approximately 0.5 m (1.5 ft)
- Yellow line ②: approximately 1 m (3 ft)
- Green line ③: approximately 2 m (7 ft)
- Green line ④: approximately 3m (10 ft) (if so equipped)

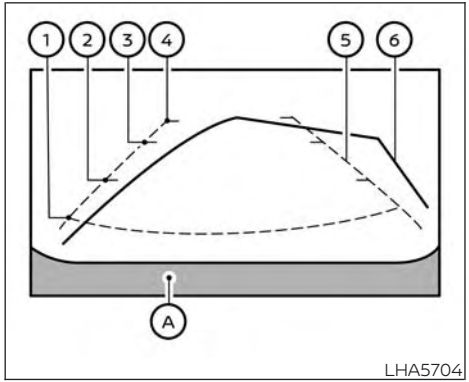

Rear view

Vehicle width guide lines ⑤

Indicate the approximate vehicle width when backing up.

Predicted course lines ⑥

Indicate the predicted course when operating the vehicle. The predicted course lines will be displayed on the monitor when the steering wheel is turned. The predicted course lines will move depending on how much the steering wheel is turned and might not be displayed while the steering wheel is in the straight-ahead position.

The front view will not be displayed when the vehicle speed is above 10 km/h (6 mph).

NOTE:

When the monitor displays the front view and the steering wheel turns about 90 degrees or less from the straight-ahead position, both the right and left predicted course lines ⑥ are displayed. When the steering wheel turns about 90 degrees or more, a line is displayed only on the opposite side of the turn.

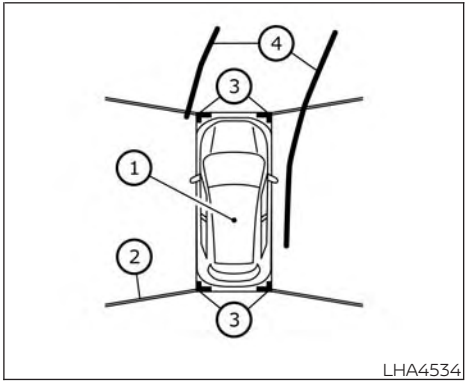

Front view

Bird's-eye view

The bird's-eye view shows the overhead view of the vehicle, which helps confirm the vehicle position and the predicted course to a parking space.

The vehicle icon ① shows the position of the vehicle. Note that the apparent distance between objects viewed in the bird's-eye view may differ somewhat from the actual distance to the vehicle.

The areas that the cameras cannot cover ② (if so equipped) are indicated in black.

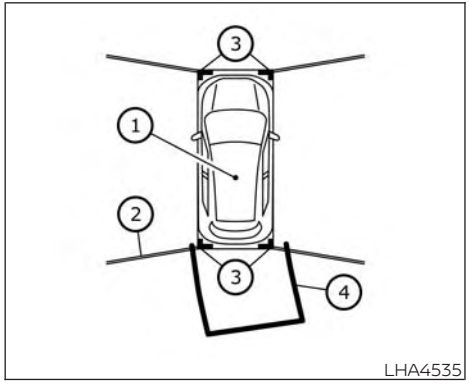

Rear view

The non-viewable area ② (if so equipped) is highlighted in yellow for several seconds after the bird's-eye view is displayed. It will be shown only the first time after the ignition switch is placed in the ON position.

In addition, the non-viewable corners are displayed in red and blink for the first 3 seconds ③ to remind the driver to be cautious.

Predicted course lines ④ indicate the predicted course when operating the vehicle. The predicted course lines will be displayed on the monitor when the steering wheel is turned. The predicted course lines will move depending on how much the steering wheel is turned and will not be displayed while the steering wheel is in the neutral position.

When the monitor displays the front view and the steering wheel turns about 90 degrees or less from the neutral position, the two green predicted course lines are shown in front of the vehicle.

When the steering wheel turns about 90 degrees or more, one green predicted course line is shown in front of the vehicle and the other predicted course line is shown at the side of the vehicle.

When the monitor displays the rear view, the predicted course lines are shown at the back of the vehicle.

⚠WARNING

- **Objects in the bird's-eye view will appear further than the actual distance.**
- **Tall objects, such as a curb or vehicle, may be misaligned or not displayed at the seam of the views.**
- **Objects that are above the camera cannot be displayed.**
- **The view of the bird's-eye view may be misaligned when the camera position alters.**
- **A line on the ground may be misaligned and is not seen as being straight at the seam of the views. The misalignment will increase as the line proceeds away from the vehicle.**

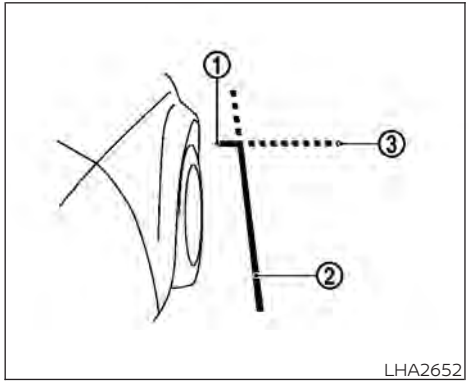

Front-side view

Guiding lines

Guiding lines that indicate the approximate width and the front end of the vehicle are displayed on the monitor.

The front-of-vehicle line ① shows the front part of the vehicle.

The side-of-vehicle line ② shows the approximate vehicle width including the outside mirrors.

The extensions ③ of both the front ① and side ② lines are shown with a green dotted line.

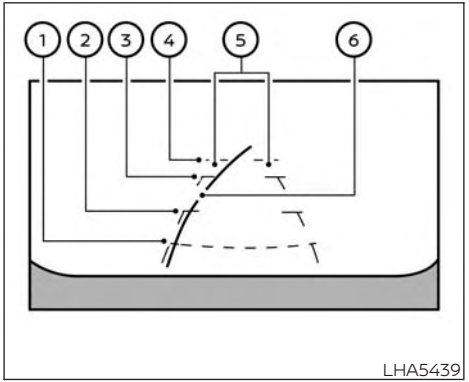

Front-wide view

Front-wide/Rear-wide view

While the front view/rear view shows a normal view on the split screens, the front-wide view/rear-wide view shows a wider area on the entire screen and allows checking of the blind corners on the left and right sides..

Distance guide lines

Indicates distances from the vehicle body:

- Red line ① : approximately 0.5 m (1.5 ft)
- Yellow line ② : approximately 1 m (3 ft)
- Green line ③ : approximately 2 m (7 ft)
- Green line ④ : approximately 3 m (10 ft) (if so equipped)

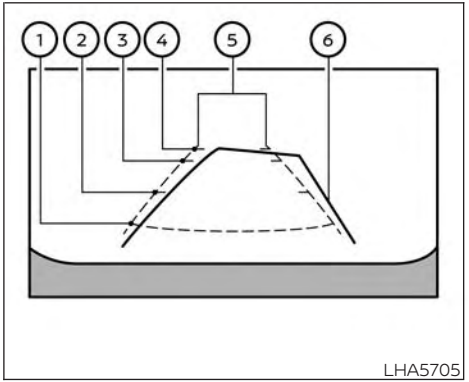

Rear-wide view

Vehicle width guide lines ⑤

Indicate the vehicle width when backing up.

Predicted course lines ⑥

Indicate the predicted course when operating the vehicle. The predicted course lines will move depending on how much the steering wheel is turned. The predicted course lines in the rear-wide view will not be displayed while the steering wheel is in the straight ahead position.

The front-wide view will not be displayed when the vehicle speed is above 10 km/h (6 mph).

NOTE:

- When the monitor displays the front-wide view and the steering wheel turns about 90 degrees or less from the straight ahead position, both the right and left predicted course lines ⑥ are displayed. When the steering wheel is turns about 90 degrees or more, the predicted course line is displayed only on the opposite side of the turn.

DIFFERENCE BETWEEN PREDICTED AND ACTUAL DISTANCES

The displayed guidelines and their locations on the ground are for approximate reference only. Objects on uphill or downhill surfaces or projecting objects will be actually located at distances different from those displayed in the monitor relative to the guidelines (refer to illustrations). When in doubt, turn around and view the objects as you are backing up, or park and exit the vehicle to view the positioning of objects behind the vehicle.

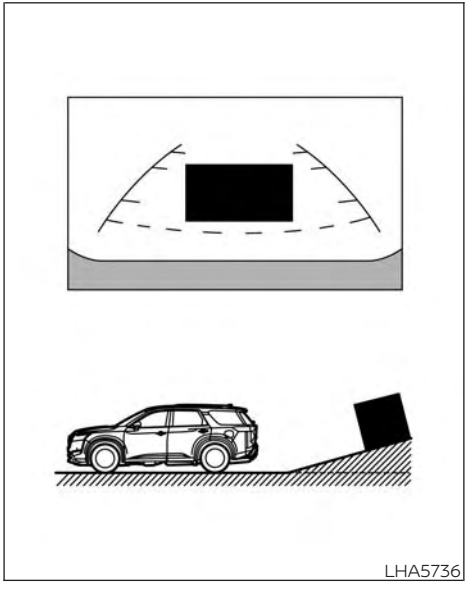
LHA5736

Backing up on a steep uphill

When backing up the vehicle up a hill, the distance guide lines and the vehicle width guide lines are shown closer than the actual distance. Note that any object on the hill is further than it appears on the monitor.

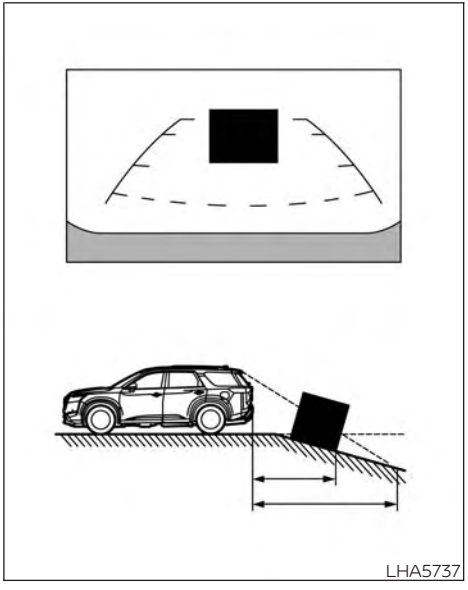
LHA5737

Backing up on a steep downhill

When backing up the vehicle down a hill, the distance guide lines and the vehicle width guide lines are shown farther than the actual distance. Note that any object on the hill is closer than it appears on the monitor.

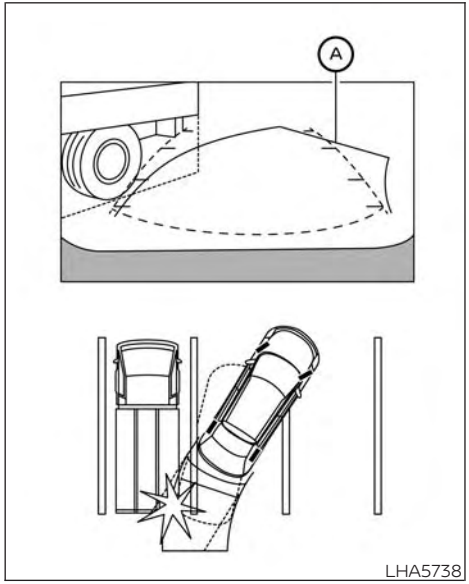

Backing up near a projecting object

The predicted course lines Ⓐ do not touch the object in the display. However, the vehicle may hit the object if it projects over the actual backing up course.

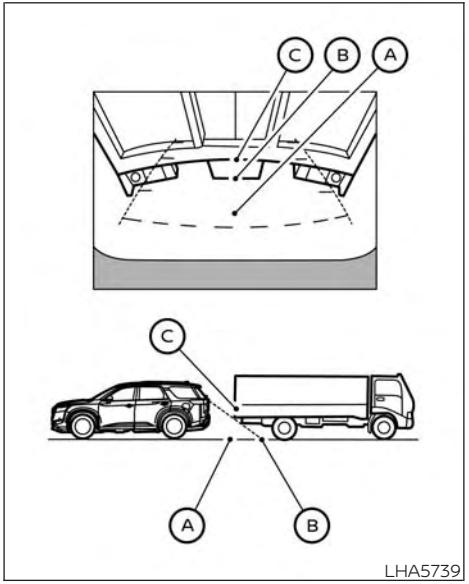

Backing up behind a projecting object

The position Ⓒ is shown farther than the position Ⓑ in the display. However, the position Ⓒ is actually at the same distance as the position Ⓐ. The vehicle may hit the object when backing up to the position Ⓐ if the object projects over the actual backing up course.

HOW TO PARK WITH PREDICTED COURSE LINES

⚠WARNING

- **If the tires are replaced with different sized tires, the predicted course lines may be displayed incorrectly.**
- **On a snow-covered or slippery road, there may be a difference between the predicted course line and the actual course line.**
- **If the battery is disconnected or becomes discharged, the predicted course lines may be displayed incorrectly. If this occurs, please perform the following procedures:**
  - **Turn the steering wheel from lock to lock while the engine is running.**
  - **Drive the vehicle on a straight road for more than 5 minutes.**
- **When the steering wheel is turned with the ignition switch in the ACC position, the predicted course lines may be displayed incorrectly.**

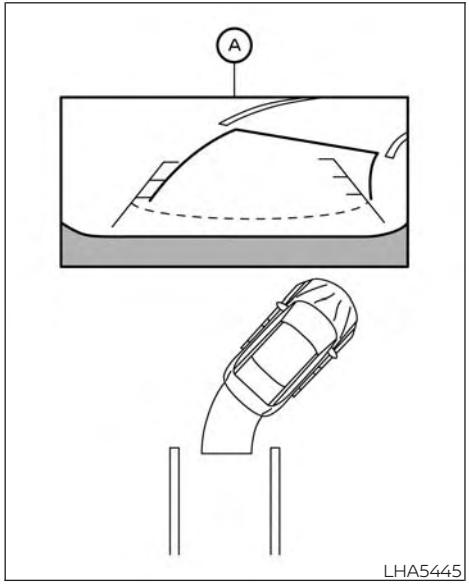

1. Visually check that the parking space is safe before parking your vehicle.
2. The rear view of the vehicle is displayed on the screen Ⓐ when the shift lever is moved to the R (Reverse) position.

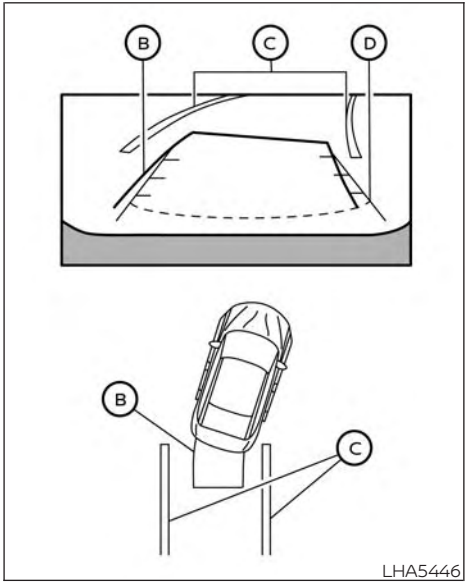

3. Slowly back up the vehicle adjusting the steering wheel so that the predicted course lines Ⓑ enter the parking space Ⓒ.
4. Maneuver the steering wheel to make the vehicle width guide lines Ⓓ parallel to the parking space Ⓒ while referring to the predicted course lines.
5. When the vehicle is parked in the space completely, move the shift position to the P (Park) position and apply the parking brake.

HOW TO SWITCH THE DISPLAY

With the ignition switch in the ON position, press the CAMERA button or move the shift lever to the R (Reverse) position to operate the Intelligent Around View® Monitor.

The Intelligent Around View® Monitor displays different split screen views depending on the position of the shift lever. Press the CAMERA button to switch between the available views.

If the shift lever is in the R (Reverse) position, the available views are:

- Rear view/bird's-eye view split screen
- Rear view/front-side view split screen
- Rear-wide view

If the shift position is in the P (Park) or D (drive) position, the available views are:

- Front view/bird's-eye view split screen
- Front view/front-side view split screen
- Front-wide view

The display will switch from the Intelligent Around View® Monitor screen when:

- The shift lever is in the D (Drive) position and the vehicle speed increases above approximately 10 km/h (6 mph)
- A different screen is selected.

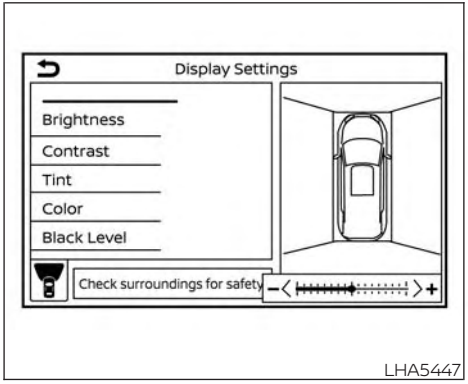

ADJUSTING THE SCREEN

1. Press the MENU button.
2. Touch the "Settings" key.
3. Touch the "Camera" key.
4. Touch the "Display Settings" key.
5. Touch the "Brightness", "Contrast", Tint", "Color", or "Black Level" key.
6. Adjust the item by touching the "+" or "–" key on the touch-screen display.

NOTE:

Do not adjust any of the display settings of the Intelligent Around View® Monitor while the vehicle is moving. Make sure the parking brake is firmly applied.

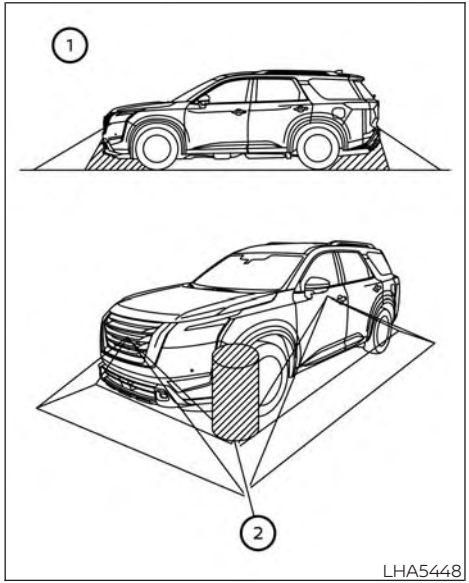

INTELLIGENT AROUND VIEW® MONITOR SYSTEM LIMITATIONS

⚠WARNING

Listed below are the system limitations for Intelligent Around View® Monitor. Failure to operate the vehicle in accordance with these system limitations could result in serious injury or death.

- **Do not use the Intelligent Around View® Monitor with the outside mirrors in the stored position, and make sure that the liftgate is securely closed when operating the vehicle using the Intelligent Around View® Monitor.**
- **The apparent distance between objects viewed on the Intelligent Around View® Monitor differs from the actual distance.**
- **The cameras are installed on the front grille, the outside mirrors and in the rear bumper. Do not put anything on the vehicle that covers the cameras.**
- **When washing the vehicle with high pressure water, be sure not to spray it around the cameras. Otherwise, water may enter the camera unit causing water condensation on the lens, a malfunction, fire or an electric shock.**
- **Do not strike the cameras. They are precision instruments. Doing so could cause a malfunction or cause damage resulting in a fire or an electric shock.**

There are some areas where the system will not show objects and the system does not warn of moving objects. When in the front or rear view display, an object below the bumper or on the ground may not be viewed ①. When in the bird's-eye view, a tall object near the seam ② of the camera viewing areas will not appear in the monitor.

The following are operating limitations and do not represent a system malfunction:

- There may be a delay when switching between views.
- When the temperature is extremely high or low, the screen may not display objects clearly.
- When strong light directly shines on the camera, objects may not be displayed clearly.
- The screen may flicker under fluorescent light.

- The colors of objects on the Intelligent Around View® Monitor may differ somewhat from the actual color of objects.
- Objects on the Intelligent Around View® Monitor may not be clear and the color of the object may differ in a dark environment.
- There may be differences in sharpness between each camera view of the bird's-eye view.
- Do not use wax on the camera lens. Wipe off any wax with a clean cloth that has been dampened with a diluted mild cleaning agent, then wipe with a dry cloth.

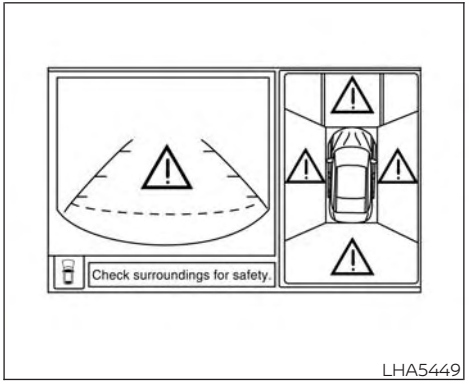

LHA5449

System temporarily unavailable

When the "!" icon is displayed on the screen, there are abnormal conditions in the Intelligent Around View® Monitor. This will not hinder normal driving operation but the system should be inspected. It is recommended that you visit a NISSAN dealer for this service.

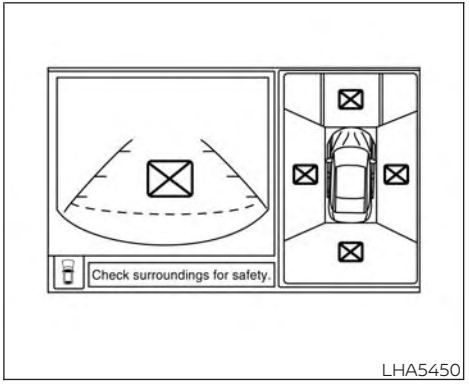

LHA5450

When the "[X]" icon is displayed on the screen, the camera image may be receiving temporary electronic disturbances from surrounding devices. This will not hinder normal driving operation but the system should be inspected if it occurs frequently. It is recommended that you visit a NISSAN dealer for this service.

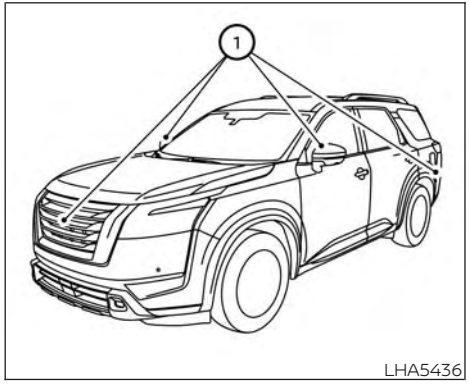

SYSTEM MAINTENANCE

⚠ CAUTION

- **Do not use alcohol, benzine or thinner to clean the camera. This will cause discoloration.**
- **Do not damage the cameras as the monitor screen may be adversely affected.**

If dirt, rain or snow accumulates on any of the cameras ①, the Intelligent Around View® Monitor may not display objects clearly. Clean the camera by wiping with a cloth dampened with a diluted mild cleaning agent and then wiping with a dry cloth.

CAMERA AIDING PARKING SENSOR (sonar) (if so equipped)

⚠ WARNING

Failure to follow the warnings and instructions for proper use of the sonar function as outlined in this section could result in serious injury or death.

- **The sonar is a convenience feature. It is not a substitute for proper parking.**
- **This function is designed as an aid to the driver in detecting large stationary objects to help avoid damaging the vehicle.**
- **The driver is always responsible for safety during parking and other maneuvers.**
- **Always look around and check that it is safe to move before parking.**
- **Read and understand the limitations of the sonar as contained in this section.**

The sonar function helps to inform the driver of large stationary objects around the vehicle when parking by issuing an audible and visual alert.

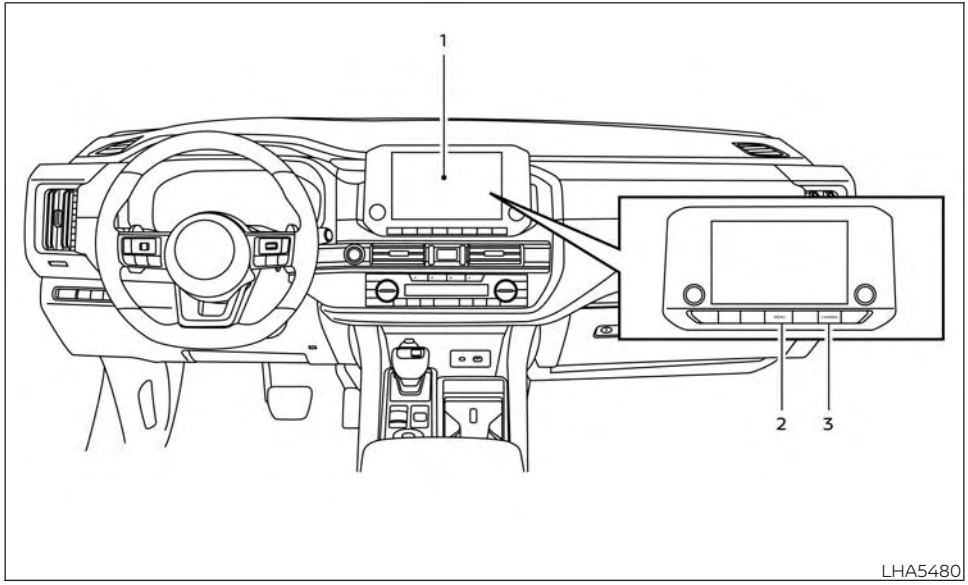

Left Hand Drive (LHD) shown, Right Hand Drive (RHD) similar

SONAR SYSTEM OPERATION

1. Center display
2. MENU button
3. CAMERA button

The system gives the tone for rear objects when the shift lever is in the "R" (Reverse) position.

When the camera image is shown on the center display, the system shows the sonar indicator regardless of the shift lever position.

The system is deactivated at speeds above 10 km/h (6 mph). It is reactivated at lower speeds.

The colors of the sonar indicators and the distance guide lines in the front and rear views indicate different distances to the object.

When the objects are detected, the indicator (green) appears and blinks and the tone sounds intermittently. When the vehicle moves closer to the object, the color of the indicator turns yellow and the rate of the blinking and the rate of the tone increase. When the vehicle is very close to the object, the indicator stops blinking and turns red, and the tone sounds continuously.

The intermittent tone will stop after 3 seconds when an object is detected by only the corner sonar and the distance does not change.

The tone will stop when the object is no longer near the vehicle.

TURNING ON AND OFF THE SONAR FUNCTION

When the "Sonar" key is selected, the indicator will turn off and the sonar will be turned off temporarily. The Moving Object Detection (MOD) system will also be turned off at the same time. For additional information, see "Moving Object Detection (MOD)" (4-26). When the "Sonar" key is selected again, the indicator will turn on and the sonar will turn back on.

In the below cases, the sonar will be turned back on automatically:

- When the shift lever is placed in the "R" (Reverse) position.
- When the CAMERA button is pressed and a screen other than the camera view is shown on the display.
- When vehicle speed decreases below approximately 6 mph (10 km/h).
- When the ignition switch is placed in the "OFF" position and turned back to the "ON" position again. To prevent the sonar system from activating altogether, use the "Camera" menu. For additional information, see "Sonar function settings" (P. 4-24).

Sonar function settings

To set up the sonar function to your preferred settings, press the MENU button, select the "Settings" key, select the "Camera/ Sonar" key and then select the "Sonar" key on the center display.

Designs and items displayed on the screen may vary depending on the models.

Sonar: When this item is turned on, the rear sonar is activated. When this item is turned off (indicator turns off), the rear sonar is deactivated. The amber markers are displayed at the corners of the vehicle icon. The next time the ignition switch is placed in the ON position, "sonar is OFF" is displayed briefly.

Sonar Sensitivity: Adjust the sensitivity level of the sonar higher (right) or lower (left).

Sonar Volume: Adjust the volume of the buzzer.

Towing mode (if so equipped): When this item is turned on, only the rear sonar is off. The amber markers are displayed at the rear corners of the vehicle icon.

Show Camera when Sonar Activate (if so equipped): When this item is turned on, the camera view is automatically shown on the display in the case that the distance to the objects measured by the sonar is becoming short.

SONAR SYSTEM LIMITATIONS

⚠WARNING

Listed below are the system limitations for the sonar function. Failure to operate the vehicle in accordance with these system limitations could result in serious injury or death.

- **Inclement weather or ultrasonic sources such as an automatic car wash, a truck's compressed-air brakes or a pneumatic drill may affect the function of the system, including reduced performance or a false activation.**
- **The system is not designed to prevent contact with small or moving objects.**
- **The system will not detect small objects below the bumper, and may not detect objects close to the bumper or on the ground.**
- **The system may not detect the following objects:**
  - **Fluffy objects such as snow, cloth, cotton, grass or wool.**
  - **Thin objects such as rope, wire or chain.**
  - **Wedge-shaped objects.**

- **If your vehicle sustains damage to the bumper fascia, leaving it misaligned or bent, the sensing zone may be altered causing inaccurate measurement of objects or false alarms.**

⚠ CAUTION

Excessive noise (such as audio system volume or an open vehicle window) will interfere with the tone and it may not be heard.

System temporarily unavailable

When the amber markers are displayed at the corners of the vehicle icon and the function cannot be activated from the Camera setting menu (the setting items are grayed out), the sonar system may be malfunctioning.

SYSTEM MAINTENANCE

⚠ CAUTION

Keep the surface of the sonar sensors (located on the front and rear bumper fascia) free from accumulations of snow, ice and dirt. Do not scratch the surface of the sonar sensors when cleaning. If the sensors are covered, the accuracy of the sonar function will be diminished.

MOVING OBJECT DETECTION (MOD)
(if so equipped)

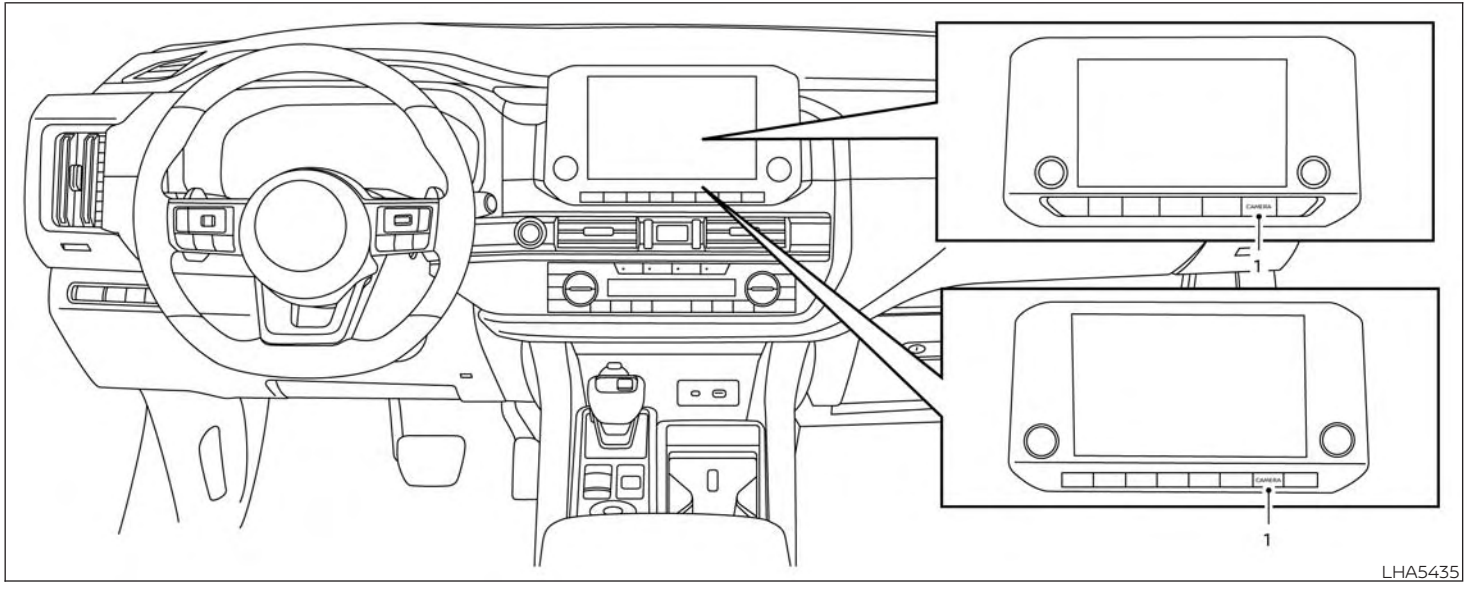

Left Hand Drive (LHD) shown, Right Hand Drive (RHD) similar

1. CAMERA button

⚠ WARNING

- **Failure to follow the warnings and instructions for proper use of the Moving Object Detection system could result in serious injury or death.**
- **The MOD system is not a substitute for proper vehicle operation and is not designed to prevent contact with objects surrounding the vehicle. When maneuvering, always use the outside mirrors and rearview mirror and turn and check the surroundings to ensure it is safe to maneuver.**
- **The system is deactivated at speeds above 10 km/h (6 mph). It is reactivated at lower speeds.**
- **The MOD system is not designed to detect surrounding stationary objects.**

The MOD system can inform the driver of moving objects near the vehicle when backing out of garages, maneuvering in parking lots and in other such instances.

The MOD system detects moving objects by using image processing technology on the image shown in the display.

MOD SYSTEM OPERATION

The MOD system will turn on automatically under the following conditions:

- When the shift lever is in the R (Reverse) position.
- When the CAMERA button is pressed to activate the camera view on the display.
- When vehicle speed decreases below approximately 10 km/h (6 mph) and the camera screen is displayed.



Front and bird's-eye views

The MOD system operates in the following conditions when the camera view is displayed:

- When the shift position is in the P (Park) or N (Neutral) position and the vehicle is stopped, the MOD system detects moving objects in the bird's-eye view. The MOD system will not operate if the outside mirrors are moving in or out, in the stowed position, or if either front door is opened.

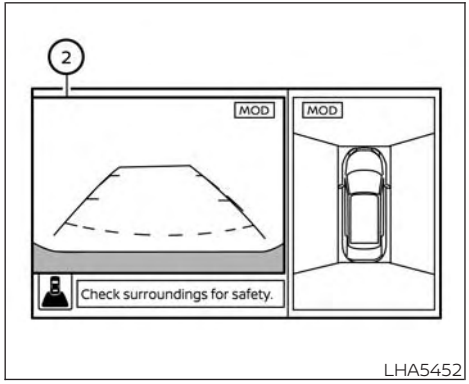

LHA5452

Rear and bird's-eye views

- When the shift lever is in the D (Drive) position and the vehicle speed is below approximately 10 km/h (6 mph), the MOD system detects moving objects in the front view.
- When the shift lever is in the R (Reverse) position and the vehicle speed is below approximately 10 km/h (6 mph), the MOD system detects moving objects in the rear view. The MOD system will not operate if the liftgate is open.

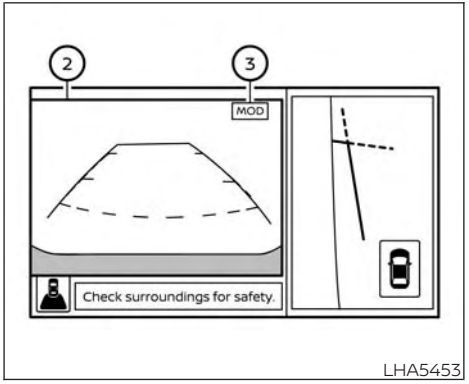

LHA5453

Rear and front-side views

The MOD system does not detect moving objects in the front-side view. The MOD icon is not displayed on the screen when in this view.

When the MOD system detects moving objects near the vehicle, a yellow frame will be displayed on the view where the objects are detected. While the MOD system continues to detect moving objects, the yellow frame continues to be displayed.

NOTE:

While the RCTA chime is beeping, the MOD system does not chime.

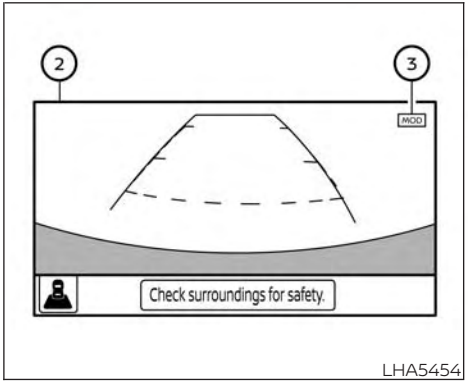

LHA5454

Front-wide view / Rear-wide View

In the bird's-eye view, the yellow frame ① is displayed on each camera image (front, rear, right, left) depending on where moving objects are detected.

The yellow frame ② is displayed on each view in the front view and rear view modes.

A green MOD icon ③ is displayed in the view where the MOD system is operative. A gray MOD icon is displayed in the view where the MOD system is not operative.

If the MOD system is turned off, the MOD icon ③ is not displayed.

TURNING MOD ON AND OFF

To turn the MOD system on or off:

1. Press the ◄ or ► button on the steering wheel and select "Settings" in the vehicle information display.
2. Using the scroll dial, select "Driver Assistance" and press the OK button.
3. Select "Parking Aids".
4. Toggle ON or OFF "Moving Object" using the OK button.

MOD SYSTEM LIMITATIONS

⚠ WARNING

Listed below are the system limitations for MOD. Failure to operate the vehicle in accordance with these system limitations could result in serious injury or death.

- **Do not use the MOD system when towing a trailer. The system may not function properly.**
- **Excessive noise (for example, audio system volume or open vehicle window) will interfere with the chime sound, and it may not be heard.**
- **The MOD system performance will be limited according to environmental conditions and surrounding objects such as:**
  - **When there is low contrast between background and the moving objects.**
  - **When there is a blinking source of light.**
  - **When strong light such as another vehicle's headlight or sunlight is present.**
  - **When camera orientation is not in its usual position, such as when a mirror is folded.**
  - **When there is dirt, water drops or snow on the camera lens.**
  - **When the position of the moving objects in the display is not changed.**
- **The MOD system might detect flowing water droplets on the camera lens, white smoke from the muffler, moving shadows, etc.**
- **The MOD system may not function properly depending on the speed, direction, distance or shape of the moving objects.**
- **If your vehicle sustains damage to the parts where the camera is installed, leaving it misaligned or bent, the sensing zone may be altered and the MOD system may not detect objects properly.**
- **When the temperature is extremely high or low, the screen may not display objects clearly. This is not a malfunction.**

NOTE:

The green MOD icon will change to orange if one of the following has occurred:

- **When the system is malfunctioning.**
- **When the component temperature reaches a high level (icon will blink).**
- **When the rearview camera has detected a blockage (icon will blink).**

If the icon light continues to illuminate orange, have the MOD system checked. It is recommended that you visit a NISSAN dealer for this service.

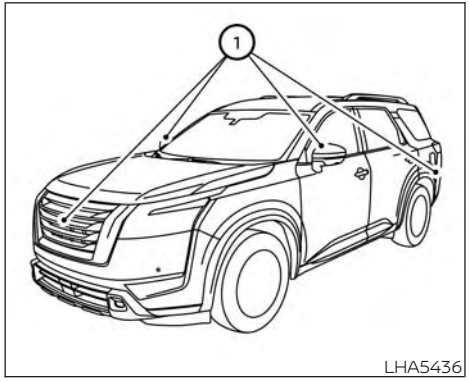

SYSTEM MAINTENANCE

⚠ CAUTION

- **Do not use alcohol, benzine or thinner to clean the camera. This will cause discoloration.**
- **Do not damage the camera as the monitor screen may be adversely affected.**

If dirt, rain or snow accumulates on any of the cameras ①, the MOD system may not operate properly. Clean the camera by wiping with a cloth dampened with a diluted mild cleaning agent and then wiping with a dry cloth.

VENTS

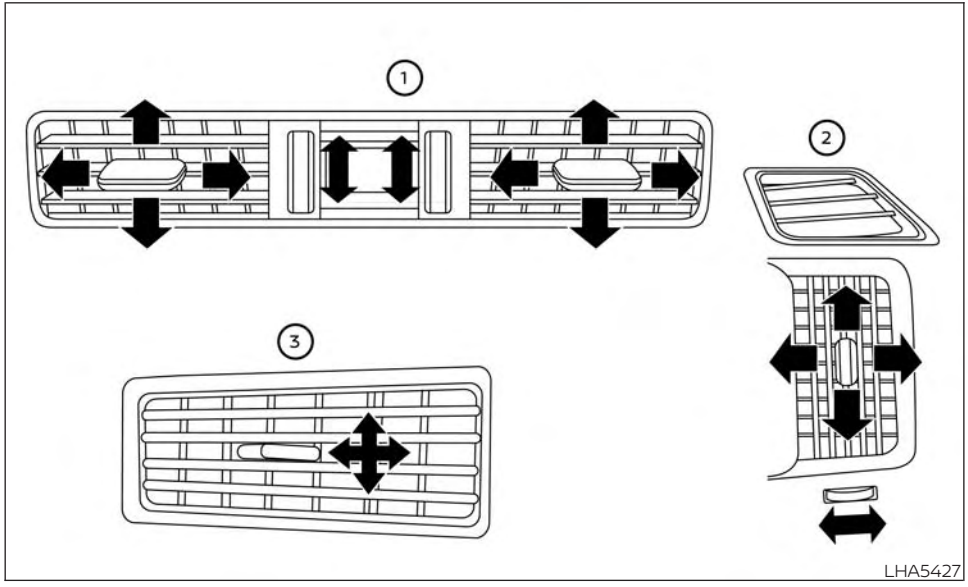

Adjust air flow direction for the center vents ①, driver's and passenger's side vents ②, and rear passenger compartment vents ③ by moving the vent slide and/or vent assemblies.

Open or close the vents using the dial.

HEATER AND AIR CONDITIONER (automatic)

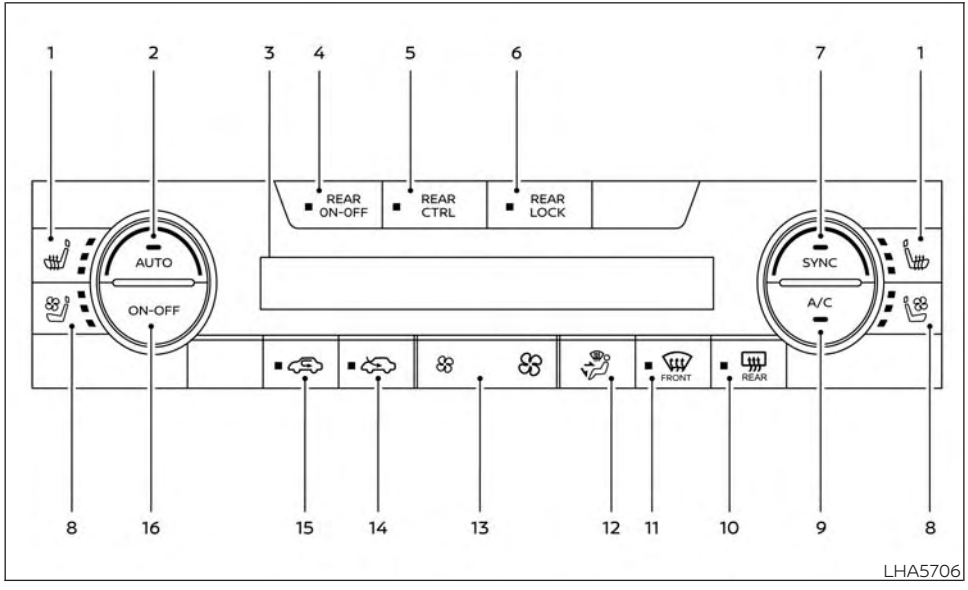

Left Hand Drive (LHD) shown, Right Hand Drive (RHD) similar

1. Heated seat switches
2. AUTO (automatic) climate control button/ temperature control dial (driver's side)
3. Display screen
4. REAR ON-OFF button
5. REAR CTRL (rear climate display screen) button
6. REAR LOCK button (if so equipped)
7. SYNC button/ temperature control dial (passenger's side)
8. Climate controlled seat switches (if so equipped)
9. A/C (air conditioner) button
10. REAR window and outside mirror defogger switch
11. Front defogger button
12. Air flow control button
13. Fan speed control buttons
14. Fresh air intake button
15. Air recirculation button
16. ON-OFF button

⚠ WARNING

- **The air conditioner cooling function operates only when the engine is running.**
- **Do not leave children or adults who would normally require the assistance of others alone in your vehicle. Pets should also not be left alone. They could accidentally injure themselves or others through inadvertent operation of the vehicle. Also, on hot, sunny days, temperatures in a closed vehicle could quickly become high enough to cause severe or possibly fatal injuries to people or animals.**

- **Do not use the recirculation mode for long periods as it may cause the interior air to become stale and the windows to fog up.**

Start the engine and operate the controls to activate the air conditioner.

NOTE:

- **Odors from inside and outside the vehicle can build up in the air conditioner unit. Odor can enter the passenger compartment through the vents.**
- **When parking, set the heater and air conditioner controls to turn off air recirculation to allow fresh air into the passenger compartment. This should help reduce odors inside the vehicle.**

AUTOMATIC OPERATION

Cooling and/or dehumidified heating (AUTO)

This mode may be used all year round as the system automatically works to keep a constant temperature. Air flow distribution, air intake control, and fan speed are also controlled automatically.

1. Press the AUTO button.
2. Turn the temperature control dial to the left or right to set the desired temperature.

- Adjust the temperature display to about 24°C (75°F) for normal operation.
- The temperature of the passenger compartment will be maintained automatically. Air flow distribution, air intake control and fan speed are also controlled automatically.
- A visible mist may be seen coming from the vents in hot, humid conditions as the air is cooled rapidly. This does not indicate a malfunction.

3. You can individually set driver's and front passenger's side temperature using each temperature control dial.

- To synchronize the driver's and front passenger's temperature settings, press the SYNC button. The SYNC indicator will illuminate.

Heating (A/C off)

The air conditioner does not activate. When you need to heat only, use this mode.

1. Press the AUTO button.
2. Turn the temperature control dial to set the desired temperature.

- The temperature of the passenger compartment will be maintained automatically. Air flow distribution, air intake control and fan speed are also controlled automatically.
- Not recommended if windows fog up.

Dehumidified defogging

1. Press the front defogger button on. (The indicator light on the button will come on.)
2. Turn the temperature control dial to set the desired temperature.

- To quickly remove ice from the outside of the windows, use the fan speed control buttons to set the fan speed to maximum.
- As soon as possible after the windshield is clean, press the AUTO button to return to the automatic mode.
- When the front defogger button is pressed, the air conditioner will automatically be turned on at outside temperatures above 2°C (36°F). The air recirculate mode automatically turns off, allowing outside air to be drawn into the passenger compartment to further improve the defogging performance.

Remote Engine Start with Intelligent Climate Control (if so equipped)

Vehicles equipped with automatic climate controls and Remote Engine Start function may go into automatic heating or cooling mode when Remote Engine Start is activated depending on outside and cabin temperatures. During this period, the climate control display and buttons will be inoperable until the ignition switch is placed in the ON position. In Remote Engine Start defogging mode, the rear window defogger and heated seats may be activated automatically.

Voice Recognition logic (if so equipped)

When the climate control system is on, the front and rear fan speeds may be automatically lowered so that commands are more easily recognized. Fan speed can be adjusted using the fan speed decrease and increase buttons, if desired.

MANUAL OPERATION

Fan speed control

Press the fan speed control buttons to manually control the fan speed.

Press the AUTO button to return to automatic control of the fan speed.

Temperature control dial

The temperature control dial allows you to adjust the temperature of the outlet air. To lower the temperature, turn the dial to the left. To increase the temperature, turn the dial to the right. Temperature can be adjusted on the driver's and passenger's side.

Air recirculation

Press the air recirculation button to recirculate interior air inside the vehicle. The indicator light on the button will come on.

The air recirculation cannot be activated when the air conditioner is in the front defogging mode.

When the outside temperature exceeds 21°C (70°F), the air conditioning system may default to air recirculation mode automatically to reduce overall power consumption. To exit air recirculation mode, deselect the air recirculation button (indicator will turn off) to enter fresh air mode.

Fresh air intake

Press the fresh air intake button to draw outside air into the passenger compartment.

A/C (air conditioner) button

Start the engine, press the fan speed control buttons to the desired position and press the A/C button to turn on the air conditioner. To turn off the air conditioner, press the A/C button again.

The air conditioner cooling function operates only when the engine is running.

Air flow control

Pressing the air flow control button manually controls air flow and selects the air outlet:

- — Air flows from center and side vents.
- — Air flows from center and side vents and foot outlets.
- — Air flows mainly from foot outlets.
- — Air flows from defogger and foot outlets.

Synchronize climate settings

Press the SYNC button to synchronize climate settings. The sync indicator will turn on.

When rear climate is off, pressing SYNC will synchronize only driver's and front passenger's climate settings. When rear climate is on, pressing SYNC will synchronize driver, front passenger, and rear temperature mode and auto fan settings.

SYNC text will appear above the rear temperature display when rear climate is synchronized with the driver's settings.

To change climate settings when SYNC is active (the SYNC indicator is on):

- The driver's side temperature control dial will control the driver, front passenger, and rear (if rear climate is on) temperatures.
- The fan speed control buttons will control the front and rear climate fan speeds.
- The front AUTO (automatic) climate control ON-OFF button will activate the front and rear climate automatic settings.
- The air flow control button will control the front and rear airflow direction.

To exit SYNC:

- To remove the front passenger from SYNC, turn the passenger's side temperature control dial. The driver and rear settings remain in SYNC until rear is removed from SYNC.
- To remove the rear from SYNC, change any of the rear climate settings. The driver and front passenger settings remain in SYNC until the front passenger is removed from SYNC.
- To reactivate SYNC press the SYNC button.

To turn system off

Press the ON-OFF button to turn the system off.

To turn system on

Press the ON-OFF button when the heater or air conditioner is off. The system will turn on with the settings that were used immediately before the system was turned off.

Rear window and outside mirror defogger switch

For additional information, see "Rear window and outside mirror defogger switch" (P. 2-83).

Heated seat switches

For additional information, see "Heated seat switches" (P. 2-93).

Climate controlled seat switches (if so equipped)

For additional information, see "Climate controlled seat switches" (P. 2-92).

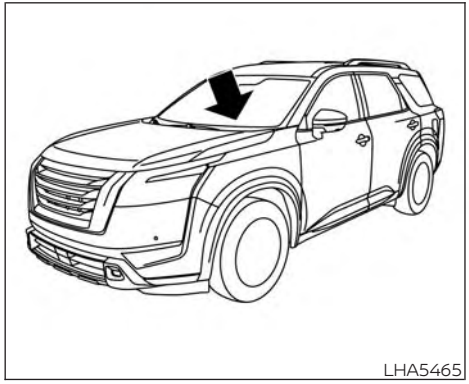

LHA5465

OPERATING TIPS

The sunload sensor, located on the top driver's side of the instrument panel, helps the system maintain a constant temperature. Do not put anything on or around this sensor.

- When the climate system is in automatic operation and the engine coolant temperature and outside air temperature are low, the air flow outlet may default to defogger mode for a maximum of 2 minutes 30 seconds. This is not a malfunction. After the engine coolant temperature warms up, the air flow outlet will return to foot mode and operation will continue normally.
- When the outside and interior cabin temperatures are moderate to high, the intake setting may default to turn off air recirculation to allow fresh air into the passenger compartment. You may notice air flow from the foot mode, bi-level mode or side demist vent outlets for a maximum of 15 seconds. This may occur when the previous climate setting was turned off. This is not a malfunction. After the initial warm air is expelled, the intake will return to automatic control, the air flow outlet will return to previous settings, and operation will continue normally. To exit, press any climate control button.
- Keep the moonroof (if so equipped) closed while the air conditioner is in operation.
- If you feel that the air flow mode you have selected and the outlets the air is coming out do not match, select the mode.
- When you change the air flow mode, you may feel air flow from the foot outlets for just a moment. This is not a malfunction.

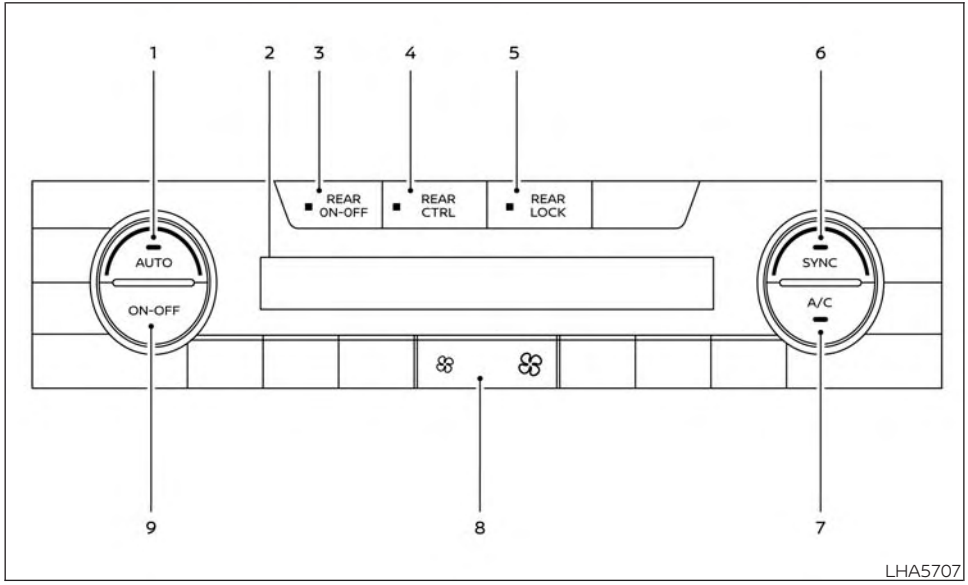

Front Controls

REAR AUTOMATIC AIR CONDITIONING SYSTEM

1. AUTO button/ temperature control dial (driver's side)
2. Display screen
3. REAR ON-OFF button
4. REAR CTRL button
5. REAR LOCK button (if so equipped)
6. SYNC button/ temperature control dial (passenger's side)
7. A/C (air conditioner) button
8. Fan speed control buttons
9. ON-OFF button

To turn on the rear automatic air conditioning system with the front air conditioner control panel, press the REAR ON-OFF button.

The rear automatic air conditioning system can be adjusted with the front air conditioner control panel by pressing the REAR CTRL button.

The front climate display will switch to the REAR climate screen.

To adjust the front air conditioning system, press the REAR CTRL button

Automatic operation

1. Press the AUTO button. The AUTO indicator button will illuminate.
2. Turn the temperature control dials to set desired temperature.

Manual operation

- **Temperature control**
  Turn the temperature control dial to set the desired temperature.

- **Fan speed control**
  Press the Fan speed control buttons to manually control the fan speed.

Rear Heating

1. Press the AUTO button. The AUTO indicator button will illuminate on the front display.
2. Turn the temperature control dial to set the desired temperature.

Turning the system off

- Press the REAR ON-OFF button on the front display to turn the Rear climate system off. The indicator light will turn off.
- Press the ON-OFF button. The rear climate will turn off and the control will switch to Front climate.

Locking the REAR controls

1. Press the REAR LOCK button on the front climate control panel. LOCK will be displayed on the rear climate display screen.
2. The rear climate controls will be locked and can only be adjusted using the front controls.

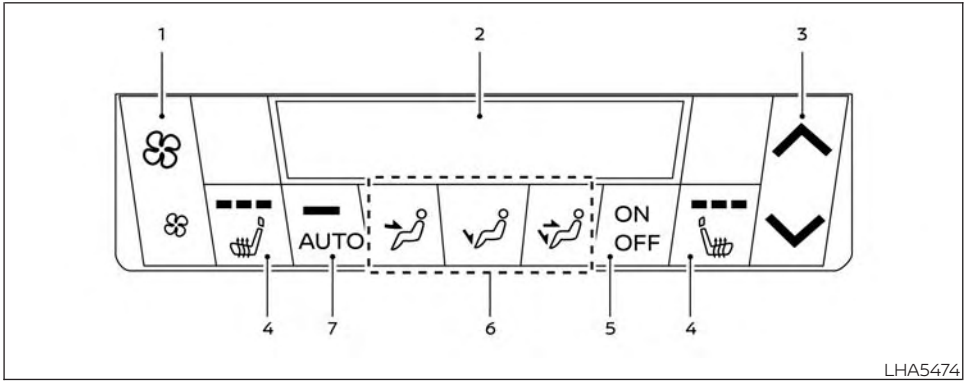

Rear Controls

Rear control buttons

1. Fan speed control buttons
2. Display screen
3. Temperature control buttons
4. Heated 2nd row seat switches (if so equipped)
5. ON-OFF button
6. Air flow control buttons
7. AUTO button

The rear seat passengers can adjust the rear automatic air conditioning system using the control buttons at the rear of the center console.

The rear control buttons do not function when the REAR LOCK button is on.

- **Fan speed control buttons** adjusts the rear fan speed up or down.
- **Temperature increase and decrease buttons** adjusts the rear temperature up or down.

- **Heated 2nd row seat switches (if so equipped)** For additional information, see "Heated 2nd row seat switches" (P. 2-94).
- **ON-OFF button** Turns rear automatic air conditioning system on and off.
- **Air flow control buttons** controls air flow and selects the air outlet.
- **AUTO button** Turns rear automatic air conditioning system on, AUTO mode on.

SERVICING AIR CONDITIONER

The air conditioner system in your NISSAN vehicle is charged with a refrigerant designed with the environment in mind.

This refrigerant does not harm the earth's ozone layer.

Special charging equipment and lubricant is required when servicing your NISSAN air conditioner. Using improper refrigerants or lubricants will cause severe damage to your air conditioner system. For additional information, see "Air conditioner system refrigerant and oil recommendations" (P. 9-6).

It is recommended that you visit a NISSAN dealer to service your "environmentally friendly" air conditioner system.

⚠WARNING

The air conditioner system contains refrigerant under high pressure. To avoid personal injury, any air conditioner service should be done only by an experienced technician with proper equipment.

ANTENNA

ROOF MOUNTED ANTENNA

The antenna is located on the rear part of the vehicle roof.

⚠CAUTION

- **A build-up of ice on the antenna can affect radio performance. Remove the ice to restore radio reception.**
- **When removing snow from the roof, do not apply strong force to the antenna. That may cause broken antenna and roof panel dent.**
- **When using a high pressure car wash, keep the high pressure nozzle away from the antenna. The seal may be deformed or damaged.**
- **The radio performance may be affected if cargo carried on the roof blocks the radio signal. If possible, do not put cargo near the antenna.**

CAR PHONE OR CB RADIO

When installing a CB, ham radio or car phone in your vehicle, be sure to observe the following precautions; otherwise, the new equipment may adversely affect the engine control system and other electronic parts.

⚠ WARNING

- **A cellular phone should not be used for any purpose while driving so full attention may be given to vehicle operation. Some jurisdictions prohibit the use of cellular phones while driving.**
- **If you must make a call while your vehicle is in motion, the hands free cellular phone operational mode is highly recommended. Exercise extreme caution at all times so full attention may be given to vehicle operation.**
- **If you are unable to devote full attention to vehicle operation while talking on the phone, pull off the road to a safe location and stop your vehicle.**

⚠ CAUTION

- **Keep the antenna as far away as possible from the electronic control modules.**
- **Keep the antenna wire more than 8 in (20 cm) away from the electronic control system harnesses. Do not route the antenna wire next to any harness.**
- **Adjust the antenna standing-wave ratio as recommended by the manufacturer.**
- **Connect the ground wire from the CB radio chassis to the body.**
- **For additional information, it is recommended that you visit a NISSAN dealer for servicing.**

iPod®/iPhone®

"Made for iPod", "Made for iPhone" and "Made for iPad" mean that an electronic accessory has been designed to connect specifically to iPod, iPhone or iPad, respectively, and has been certified by the developer to meet Apple performance standards. Apple is not responsible for the operation of this device or its compliance with safety and regulatory standards. Please note that the use of this accessory with iPod, iPhone or iPad may affect wireless performance.

iPad, iPhone, iPod classic, iPod nano, iPod shuffle and iPod touch are trademarks of Apple Inc., registered in the U.S. and other countries. Lightning is a trademark of Apple Inc.

5 Starting and driving

Precautions when starting and driving 5-6
Exhaust gas (carbon monoxide) 5-6
Three-way catalyst 5-6
Tire Pressure Monitoring System (TPMS) (if so equipped) 5-7
On-pavement and off-road driving precautions 5-11
Avoiding collision and rollover 5-11
Off-road recovery 5-11
Rapid air pressure loss 5-12
Drinking alcohol/drugs and driving 5-12
Driving safety precautions 5-13
Push-button ignition switch 5-15
Operating range 5-16
Push-button ignition switch positions 5-16
Emergency engine shut off 5-17
NISSAN Intelligent Key® battery discharge 5-17
NISSAN Vehicle Immobilizer System 5-18
Before starting the engine 5-18
Starting the engine 5-18
Remote Engine Start (if so equipped) 5-19
Driving the vehicle 5-20
Engine protection mode 5-20
Automatic Transmission (A/T) 5-20
Parking brake 5-27
Electronic parking brake (switch type) 5-27
Automatic brake hold 5-29
How to activate/deactivate the automatic brake hold function 5-30
How to use the automatic brake hold function 5-31
Drive Mode Selector 5-32
STANDARD MODE (2WD models)/AUTO MODE (4WD models) 5-33
SPORT mode 5-33
SNOW mode 5-33
TOW mode 5-33
MUD/RUT mode (4WD models) 5-33
SAND mode (4WD models) 5-33
ECO mode 5-34
Traffic Sign Recognition (TSR) (if so equipped) . . . 5-36
System operation 5-36
Turning the Traffic Sign Recognition (TSR) system on and off 5-37
System temporarily unavailable 5-38
System malfunction 5-38
System maintenance 5-38
Lane Departure Warning (LDW) (if so equipped) 5-39

LDW system operation 5-40
How to enable/disable the LDW system 5-42
LDW system limitations 5-43
System temporarily unavailable 5-44
System malfunction 5-45
System maintenance 5-45
Intelligent Lane Intervention (if so equipped) 5-46
Intelligent Lane Intervention system operation 5-47
How to enable/disable the Intelligent Lane Intervention system 5-49
Intelligent Lane Intervention system limitations 5-51
System temporarily unavailable 5-52
System malfunction 5-53
System maintenance 5-53
Emergency Lane Assist system (if so equipped) 5-54
Emergency Lane Assist system operation 5-55
How to enable/disable the Emergency Lane Assist system 5-57
Emergency Lane Assist system limitations 5-59
System temporarily unavailable 5-62
System malfunction 5-63
System maintenance 5-63
Blind Spot Warning (BSW) (if so equipped) 5-64
BSW system operation 5-65
How to enable/disable the BSW system 5-67
BSW system limitations 5-68
BSW driving situations 5-69
System temporarily unavailable 5-73
System maintenance 5-75
Intelligent Blind Spot Intervention (if so equipped) 5-76
Intelligent Blind Spot Intervention system operation 5-77
How to enable/disable the Intelligent Blind Spot Intervention system 5-79
Intelligent Blind Spot Intervention system limitations 5-81
Intelligent Blind Spot Intervention driving situations 5-83
System temporarily unavailable 5-87
System malfunction 5-88
System maintenance 5-88
Rear Cross Traffic Alert (RCTA) (if so equipped) 5-90
RCTA system operation 5-90

How to enable/disable the RCTA system 5-93
RCTA system limitations 5-95
System temporarily unavailable 5-97
System maintenance 5-99
Speed Limiter (if so equipped) 5-100
Speed limiter operations 5-100
Cruise control (if so equipped) 5-103
Precautions on cruise control 5-103
Cruise control operations 5-103
Intelligent Cruise Control (ICC) (if so equipped) 5-105
How to select the cruise control mode 5-107
Vehicle-to-vehicle distance control mode 5-108
Vehicle-to-vehicle distance control mode operation 5-109
Vehicle-to-vehicle distance control mode switches 5-112
Vehicle-to-vehicle distance control mode limitations 5-119
System temporarily unavailable 5-123
System maintenance 5-126
Conventional (fixed speed) cruise control mode 5-127
ProPILOT/ProPILOT Assist (if so equipped) 5-133
ProPILOT Assist system operation 5-135
Turning the conventional (fixed speed) cruise control mode on 5-140
Operating ProPILOT Assist 5-140
How to enable/disable the Steering Assist 5-147
Intelligent Cruise Control (ICC) (for vehicles with ProPILOT Assist) 5-149
Steering Assist 5-161
Conventional (fixed speed) cruise control mode 5-168
Rear Automatic Braking (RAB) (if so equipped) 5-171
RAB system operation 5-172
Turning the RAB system on/off 5-174
RAB system limitations 5-175
System malfunction 5-177
System maintenance 5-177
Intelligent Emergency Braking (if so equipped) 5-178
Intelligent Emergency Braking system operation 5-179
Turning the Intelligent Emergency Braking system ON/OFF 5-181

Intelligent Emergency Braking system limitations 5-183
System temporarily unavailable 5-184
System malfunction 5-186
System maintenance 5-187
Intelligent Emergency Braking with Pedestrian Detection (if so equipped) 5-188
Intelligent Emergency Braking with Pedestrian Detection system operation 5-189
Turning the Intelligent Emergency Braking with Pedestrian Detection system ON/OFF 5-192
Intelligent Emergency Braking with Pedestrian Detection system limitations 5-194
System temporarily unavailable 5-197
System malfunction 5-200
System maintenance 5-200
Intelligent Forward Collision Warning (if so equipped) 5-202
Intelligent Forward Collision Warning system operation 5-205
Turning the Intelligent Forward Collision Warning system on/off 5-206
Intelligent Forward Collision Warning system limitations 5-208
System temporarily unavailable 5-213
System malfunction 5-215
System maintenance 5-216
Intelligent Driver Alertness (if so equipped) 5-217
Intelligent Driver Alertness system operation 5-217
How to enable/disable the Intelligent Driver Alertness system 5-219
Intelligent Driver Alertness system limitations 5-220
Break-in schedule 5-222
Increasing fuel economy 5-222
Intelligent 4X4 (if so equipped) 5-222
Parking/parking on hills 5-225
Towing a trailer 5-226
Trailer towing tips 5-227
Flat towing for 4-Wheel Drive vehicle (if so equipped) 5-227
Flat towing for front wheel drive vehicle (if so equipped) 5-227
Electric trailer brake controller (if so equipped) 5-228

Power steering 5-229
Brake system 5-230
Brake precautions 5-230
Anti-lock Braking System (ABS) 5-231
Brake Assist 5-232
Vehicle Dynamic Control (VDC) or Electronic Stability Program (ESP) system 5-232
Rise-up and build-up 5-234
Brake force distribution 5-234
Chassis control 5-235
Intelligent Trace Control 5-235
Intelligent Ride Control (if so equipped) 5-235
Hill descent control system (if so equipped) . . . 5-236
Hill start assist system 5-237
Front and Rear Sonar System (if so equipped) 5-237
System operation 5-238
How to enable/disable the front and rear sonar system 5-240
Sonar limitations 5-242
System temporarily unavailable 5-242
System maintenance 5-243
Cold weather driving 5-243
Freeing a frozen door lock 5-243
Antifreeze 5-243
Battery 5-243
Draining of coolant water 5-243
Tire equipment 5-244
Special winter equipment 5-244
Driving on snow or ice 5-244

⚠ WARNING

- **Do not leave children or adults who would normally require the assistance of others alone in your vehicle. Pets should also not be left alone. They could accidentally injure themselves or others through inadvertent operation of the vehicle. Also, on hot, sunny days, temperatures in a closed vehicle could quickly become high enough to cause severe or possibly fatal injuries to people or animals.**
- **Properly secure all cargo with ropes or straps to help prevent it from sliding or shifting. Do not place cargo higher than the seatbacks. In a sudden stop or collision, unsecured cargo could cause personal injury.**

EXHAUST GAS (carbon monoxide)

⚠ WARNING

- **Do not breathe exhaust gases; they contain colorless and odorless carbon monoxide. Carbon monoxide is dangerous. It can cause unconsciousness or death.**
- **If you suspect that exhaust fumes are entering the vehicle, drive with all windows fully open, and have the vehicle inspected immediately.**
- **Do not run the engine in closed spaces such as a garage.**
- **Do not park the vehicle with the engine running for any extended length of time.**
- **Keep the rear vent windows, liftgates, doors and trunk lids (if so equipped) closed while driving, otherwise exhaust gases could be drawn into the passenger compartment. If you must drive with one of these open, follow these precautions:**
  1. **Open all the windows.**
  2. **Set the air recirculation button to off and the fan control dial to high to circulate the air.**
- **If electrical wiring or other cable connections must pass to a trailer through the seal on the liftgate or the body, follow the manufacturer's recommendation to prevent carbon monoxide entry into the vehicle.**
- **The exhaust system and body should be inspected by a qualified mechanic whenever:**
  a. **The vehicle is raised for service.**
  b. **You suspect that exhaust fumes are entering into the passenger compartment.**
  c. **You notice a change in the sound of the exhaust system.**
  d. **You have had an accident involving damage to the exhaust system, underbody, or rear of the vehicle.**

THREE-WAY CATALYST

The three-way catalyst is an emission control device installed in the exhaust system. Exhaust gases in the three-way catalyst are burned at high temperatures to help reduce pollutants.

⚠ WARNING

- **The exhaust gas and the exhaust system are very hot. Keep people, animals or flammable materials away from the exhaust system components.**

- **Do not stop or park the vehicle over flammable materials such as dry grass, waste paper or rags. They may ignite and cause a fire.**

⚠ CAUTION

- **Do not use leaded gasoline. Deposits from leaded gasoline will seriously reduce the three-way catalyst's ability to help reduce exhaust pollutants.**
- **Keep your engine tuned up. Malfunctions in the ignition, fuel injection, or electrical systems can cause overrich fuel flow into the three-way catalyst, causing it to overheat. Do not keep driving if the engine misfires, or if noticeable loss of performance or other unusual operating conditions are detected. Have the vehicle inspected promptly. It is recommended that you visit a NISSAN dealer for this service.**
- **Avoid driving with an extremely low fuel level. Running out of fuel could cause the engine to misfire, damaging the three-way catalyst.**
- **Do not race the engine while warming it up.**
- **Do not push or tow your vehicle to start the engine.**

TIRE PRESSURE MONITORING SYSTEM (TPMS) (if so equipped)

Each tire, including the spare (if provided), should be checked monthly when cold and inflated to the inflation pressure recommended by the vehicle manufacturer on the vehicle placard or tire inflation pressure label. (If your vehicle has tires of a different size than the size indicated on the vehicle placard or tire inflation pressure label, you should determine the proper tire inflation pressure for those tires.)

As an added safety feature, your vehicle has been equipped with a Tire Pressure Monitoring System (TPMS) that illuminates a low tire pressure telltale when one or more of your tires is significantly underinflated. Accordingly, when the low tire pressure telltale illuminates, you should stop and check all your tires as soon as possible, and inflate them to the proper pressure. Driving on a significantly underinflated tire causes the tire to overheat and can lead to tire failure. Under-inflation also reduces fuel efficiency and tire tread life, and may affect the vehicle's handling and stopping ability.

Please note that the TPMS is not a substitute for proper tire maintenance, and it is the driver's responsibility to maintain correct tire pressure, even if under-inflation has not reached the level to trigger illumination of the TPMS low tire pressure telltale.

Your vehicle has also been equipped with a TPMS malfunction indicator to indicate when the system is not operating properly. The TPMS malfunction indicator is combined with the low tire pressure telltale. When the system detects a malfunction, the telltale will flash for approximately one minute and then remain continuously illuminated. This sequence will continue upon subsequent vehicle start-ups as long as the malfunction exists. When the malfunction indicator is illuminated, the system may not be able to detect or signal low tire pressure as intended. TPMS malfunctions may occur for a variety of reasons, including the installation of replacement or alternate tires or wheels on the vehicle that prevent the TPMS from functioning properly. Always check the TPMS malfunction telltale after replacing one or more tires or wheels on your vehicle to ensure that the replacement or alternate tires and wheels allow the TPMS to continue to function properly.

Additional information:

- When using a wheel without the TPMS such as the spare tire, the TPMS does not monitor the tire pressure of the spare tire.
- The TPMS will activate only when the vehicle is driven at speeds above 25 km/h (16 mph). Also, this system may not detect a sudden drop in tire pressure (for example, a flat tire while driving).
- The low tire pressure warning light does not automatically turn off when the tire pressure is adjusted. After the tire is inflated to the recommended pressure, reset the tire pressures registered in your vehicle (model with TPMS reset function).
- The vehicle must be driven at speeds above 25 km/h (16 mph) to activate the TPMS and turn off the low tire pressure warning light. Use a tire pressure gauge to check the tire pressure.
- The "Tyre Pressure Low - Add Air" warning appears in the vehicle information display when the low tire pressure warning light is illuminated and low tire pressure is detected. The "Tyre Pressure Low - Add Air" warning turns off when the low tire pressure warning light turns off.
- The "Tyre Pressure Low - Add Air" warning appears each time the ignition switch is placed in the ON position as long as the low tire pressure warning light remains illuminated.
- The "Tyre Pressure Low - Add Air" warning does not appear if the low tire pressure warning light illuminates to indicate a TPMS malfunction.
- Tire pressure rises and falls depending on the heat caused by the vehicle's operation and the outside temperature. Do not reduce the tire pressure after driving because the tire pressure rises after driving. Low outside temperature can lower the temperature of the air inside the tire which can cause a lower tire inflation pressure. This may cause the low tire pressure warning light to illuminate. If the warning light illuminates, check the tire pressure for all four tires.
- Depending on a change in the outside temperature, the low tire pressure warning light may illuminate even if the tire pressure has been adjusted properly. Adjust the tire pressure to the recommended COLD tire pressure again when the tires are cold and reset the TPMS
- The tire placard is located in the driver's door opening.
- You can also check the pressure of all tires (except the spare tire) on the vehicle information display screen. The order of the tire pressure figures displayed on the screen corresponds with the actual order of the tire position.

For additional information, see "Low tire pressure warning light" (P. 2-19) and "Tire Pressure Monitoring System (TPMS)" (P. 6-3).

⚠WARNING

- **Radio waves could adversely affect electric medical equipment. Those who use a pacemaker should contact the electric medical equipment manufacturer for the possible influences before use.**

- **If the low tire pressure warning light illuminates while driving, avoid sudden steering maneuvers or abrupt braking, reduce vehicle speed, pull off the road to a safe location and stop the vehicle as soon as possible. Driving with under-inflated tires may permanently damage the tires and increase the likelihood of tire failure. Serious vehicle damage could occur and may lead to an accident and could result in serious personal injury. Check the tire pressure for all four tires. Adjust the tire pressure to the recommended COLD tire pressure shown on the tire placard to turn the low tire pressure warning light off. If you have a flat tire, replace it with a spare tire as soon as possible. For additional information, see "Flat tire" (P. 6-3).**

- **When using a wheel without the TPMS such as the spare tire, when a spare tire is mounted or a wheel is replaced, tire pressure will not be indicated, the TPMS will not function and the low tire pressure warning light will flash for approximately 1 minute. The light will remain on after 1 minute. Have your tires replaced and/or TPMS system reset as soon as possible. It is recommended that you visit a NISSAN dealer for this service.**
- **Replacing tires with those not originally specified by NISSAN could affect the proper operation of the TPMS.**
- **After adjusting the tire pressure, be sure to reset the TPMS. Otherwise the TPMS will not warn of low tire pressure (models with TPMS reset function).**
- **Do not inject any tire liquid or aerosol tire sealant into the tires, as this may cause a malfunction of the tire pressure sensors.**

⚠ CAUTION

- **The TPMS may not function properly when the wheels are equipped with tire chains or the wheels are buried in snow.**
- **Do not place metalized film or any metal parts (antenna, etc.) on the windows. This may cause poor reception of the signals from the tire pressure sensors, and the TPMS will not function properly.**

Some devices and transmitters may temporarily interfere with the operation of the TPMS and cause the low tire pressure warning light to illuminate.

Some examples are:

- Facilities or electric devices using similar radio frequencies are near the vehicle.
- If a transmitter set to similar frequencies is being used in or near the vehicle.
- If a computer (or similar equipment) or a DC/AC converter is being used in or near the vehicle.

The low tire pressure warning light may illuminate in the following cases.

- If the vehicle is equipped with a wheel and tire without TPMS.
- If the TPMS has been replaced and the ID has not been registered.
- If the wheel is not originally specified by NISSAN.

FCC Notice:

For USA:

This device complies with Part 15 of the FCC Rules. Operation is subject to the following two conditions: (1) This device may not cause harmful interference, and (2) this device must accept any interference received, including interference that may cause undesired operation.

NOTE:
Changes or modifications not expressly approved by the party responsible for compliance could void the user's authority to operate the equipment.

For Canada:

This device contains licence-exempt transmitter(s)/receiver(s) that comply with Innovation, Science and Economic Development Canada's licence-exempt RSS(s). Operation is subject to the following two conditions: (1) This device may not cause interference. (2) This device must accept any interference, including interference that may cause undesired operation of the device.

TPMS with Easy-Fill Tire Alert (if so equipped)

When adding air to an under-inflated tire, the TPMS with Easy-Fill Tire Alert provides visual and audible signals outside the vehicle to help you inflate the tires to the recommended COLD tire pressure.

Vehicle set-up

1. Park the vehicle in a safe and level place.
2. Apply the parking brake and place the shift position in the P (Park) position.
3. Place the ignition switch in the ON position. Do not start the engine.

Operation

1. Add air to the tire.
2. After a few seconds, the hazard indicators will start flashing.
3. When the designated pressure is reached, the horn beeps once and the hazard indicators stop flashing.
4. Perform the above steps for each tire.
   - If the tire is over-inflated more than approximately 4 psi (30 kPa), the horn beeps and the hazard indicators flash three times. To correct the pressure, push the core of the valve stem on the tire briefly to release pressure. When the pressure reaches the designated pressure, the horn beeps once.
   - If the hazard indicator does not flash within approximately 15 seconds after starting to inflate the tire, it indicates that the Easy-Fill Tire Alert is not operating.
   - The TPMS will not activate the Easy-Fill Tire Alert under the following conditions:
     - If there is interference from an external device or transmitter.
     - The air pressure from the inflation device is not sufficient to inflate the tire.
     - There is a malfunction in the TPMS.
     - There is a malfunction in the horn or hazard indicators.
     - The identification code of the tire pressure sensor is not registered to the system.
     - The battery of the tire pressure sensor is low.

- If the Easy-Fill Tire Alert does not operate due to TPMS interference, move the vehicle about 3 ft (1 m) backward or forward and try again.

If the Easy-Fill Tire Alert is not working, use a tire pressure gauge.

ON-PAVEMENT AND OFF-ROAD DRIVING PRECAUTIONS

Utility vehicles have a significantly higher rollover rate than other types of vehicles.

They have higher ground clearance than passenger cars to make them capable of performing in a variety of on-pavement and off-road applications. This gives them a higher center of gravity than ordinary vehicles. An advantage of higher ground clearance is a better view of the road, allowing you to anticipate problems. However, they are not designed for cornering at the same speeds as conventional 2-Wheel Drive vehicles any more than low-slung sports cars are designed to perform satisfactorily under off-road conditions. If at all possible, avoid sharp turns at high speeds. As with other vehicles of this type, failure to operate this vehicle correctly may result in loss of control or vehicle rollover.

In a rollover crash, an unbelted person is significantly more likely to die than a person wearing a seat belt.

For additional information, see "Driving safety precautions" (P. 5-13).

AVOIDING COLLISION AND ROLLOVER

⚠WARNING

Failure to operate this vehicle in a safe and prudent manner may result in loss of control or an accident.

Be alert and drive defensively at all times. Obey all traffic regulations. Avoid excessive speed, high speed cornering, or sudden steering maneuvers, because these driving practices could cause you to lose control of your vehicle.

As with any vehicle, loss of control could result in a collision with other vehicles or objects or cause the vehicle to roll over, particularly if the loss of control causes the vehicle to slide sideways.

Be attentive at all times, and avoid driving when tired. Never drive when under the influence of alcohol or drugs (including prescription or over-the-counter drugs which may cause drowsiness). Always wear your seat belt as outlined in the "Safety – Seats, seat belts and supplemental restraint system" section of this manual, and also instruct your passengers to do so.

Seat belts help reduce the risk of injury in collisions and rollovers.

In a rollover crash, an unbelted person is significantly more likely to die than a person wearing a seat belt.

OFF-ROAD RECOVERY

While driving, the right side or left side wheels may unintentionally leave the road surface. If this occurs, maintain control of the vehicle by following the procedure below. Please note that this procedure is only a general guide. The vehicle must be driven as appropriate based on the conditions of the vehicle, road and traffic.

1. Remain calm and do not overreact.
2. Do not apply the brakes.
3. Maintain a firm grip on the steering wheel with both hands and try to hold a straight course.
4. When appropriate, slowly release the accelerator pedal to gradually slow the vehicle.

5. If there is nothing in the way, steer the vehicle to follow the road while vehicle speed is reduced. Do not attempt to drive the vehicle back onto the road surface until vehicle speed is reduced.
6. When it is safe to do so, gradually turn the steering wheel until both tires return to the road surface. When all tires are on the road surface, steer the vehicle to stay in the appropriate driving lane.
   - If you decide that it is not safe to return the vehicle to the road surface based on vehicle, road or traffic conditions, gradually slow the vehicle to a stop in a safe place off the road.

RAPID AIR PRESSURE LOSS

Rapid air pressure loss or a "blow-out" can occur if the tire is punctured or is damaged due to hitting a curb or pothole. Rapid air pressure loss can also be caused by driving on under-inflated tires.

Rapid air pressure loss can affect the handling and stability of the vehicle, especially at highway speeds.

Help prevent rapid air pressure loss by maintaining the correct air pressure and visually inspecting the tires for wear and damage. For additional information, see "Wheels and tires" (P. 8-35). If a tire rapidly loses air pressure or "blows-out" while driving, maintain control of the vehicle by following the procedure below. Please note that this procedure is only a general guide. The vehicle must be driven as appropriate based on the conditions of the vehicle, road and traffic.

⚠WARNING

The following actions can increase the chance of losing control of the vehicle if there is a sudden loss of tire air pressure. Losing control of the vehicle may cause a collision and result in personal injury.

- **The vehicle generally moves or pulls in the direction of the flat tire.**
- **Do not rapidly apply the brakes.**
- **Do not rapidly release the accelerator pedal.**
- **Do not rapidly turn the steering wheel.**

1. Remain calm and do not overreact.
2. Maintain a firm grip on the steering wheel with both hands and try to hold a straight course.
3. When appropriate, slowly release the accelerator pedal to gradually slow the vehicle.
4. Gradually steer the vehicle to a safe location off the road and away from traffic if possible.
5. Lightly apply the brake pedal to gradually stop the vehicle.
6. Turn on the hazard warning flashers and contact a roadside emergency service to change the tire. For additional information, see "Changing a flat tire" (P. 6-4).

DRINKING ALCOHOL/DRUGS AND DRIVING

⚠WARNING

Never drive under the influence of alcohol or drugs. Alcohol in the bloodstream reduces coordination, delays reaction time and impairs judgement. Driving after drinking alcohol increases the likelihood of being involved in an accident injuring yourself and others. Additionally, if you are injured in an accident, alcohol can increase the severity of the injury.

NISSAN is committed to safe driving. However, you must choose not to drive under the influence of alcohol. Every year thousands of people are injured or killed in alcohol-related collisions. Although the local laws vary on what is considered to be legally intoxicated, the fact is that alcohol affects all people differently and most people underestimate the effects of alcohol.

Remember, drinking and driving don't mix! That is true for drugs (over-the-counter, prescription) and illegal drugs, too. Don't drive if your ability to operate your vehicle is impaired by alcohol, drugs, or some other physical condition.

DRIVING SAFETY PRECAUTIONS

Your NISSAN is designed for both normal and off-road use. However, avoid driving in deep water or mud as your NISSAN is mainly designed for leisure use, unlike a conventional off-road vehicle.

Remember that 2-Wheel Drive (2WD) models are less capable than 4-Wheel Drive (4WD) models for rough road driving and extrication when stuck in deep snow or mud, or the like.

Please observe the following precautions:

⚠WARNING

- **Spinning the front wheels on slippery surfaces may cause the 4WD warning message to display and the 4WD system to automatically switch from the 4WD to the 2WD mode. This could reduce the traction. Be especially careful when towing a trailer (4WD models).**
- **Drive carefully when off the road and avoid dangerous areas. Every person who drives or rides in this vehicle should be seated with their seat belt fastened. This will keep you and your passengers in position when driving over rough terrain.**
- **Do not drive across steep slopes. Instead drive either straight up or straight down the slopes. Off-road vehicles can tip over sideways much more easily than they can forward or backward.**
- **Many hills are too steep for any vehicle. If you drive up them, you may stall. If you drive down them, you may not be able to control your speed. If you drive across them, you may roll over.**
- **Do not shift gears while driving on downhill grades as this could cause loss of control of the vehicle.**
- **Stay alert when driving to the top of a hill. At the top there could be a drop-off or other hazard that could cause an accident.**
- **If your engine stalls or you cannot make it to the top of a steep hill, never attempt to turn around. Your vehicle could tip or roll over. Always back straight down in R (Reverse) gear and apply brakes to control your speed.**
- **Heavy braking going down a hill could cause your brakes to overheat and fade, resulting in loss of control and an accident. Apply brakes lightly and use a low gear to control your speed.**
- **Unsecured cargo can be thrown around when driving over rough terrain. Properly secure all cargo so it will not be thrown forward and cause injury to you or your passengers.**
- **Secure heavy loads in the cargo area as far forward and as low as possible. Do not equip the vehicle with tires larger than specified in this manual. This could cause your vehicle to roll over.**

- **Do not grip the inside or spokes of the steering wheel when driving off-road. The steering wheel could move suddenly and injure your hands. Instead drive with your fingers and thumbs on the outside of the rim.**
- **Before operating the vehicle, ensure that the driver and all passengers have their seat belts fastened.**
- **Always drive with the floor mats in place as the floor may become hot.**
- **Lower your speed when encountering strong crosswinds. With a higher center of gravity, your NISSAN is more affected by strong side winds. Slower speeds ensure better vehicle control.**
- **Do not drive beyond the performance capability of the tires, even with 4WD engaged.**
- **For 4WD equipped vehicles, do not attempt to raise two wheels off the ground and shift the transmission to any drive or reverse position with the engine running. Doing so may result in drivetrain damage or unexpected vehicle movement which could result in serious vehicle damage or personal injury.**
- **Do not attempt to test an 4WD equipped vehicle on a 2-wheel dynamometer (such as the dynamometers used by some states for emissions testing), or similar equipment even if the other two wheels are raised off the ground. Make sure you inform test facility personnel that your vehicle is equipped with 4WD before it is placed on a dynamometer. Using the wrong test equipment may result in drivetrain damage or unexpected vehicle movement which could result in serious vehicle damage or personal injury.**
- **When a wheel is off the ground due to an unlevel surface, do not spin the wheel excessively.**
- **Accelerating quickly, sharp steering maneuvers or sudden braking may cause loss of control.**
- **If at all possible, avoid sharp turning maneuvers, particularly at high speeds. Your NISSAN vehicle has a higher center of gravity than a passenger car. The vehicle is not designed for cornering at the same speeds as passenger cars.**
- **Failure to operate this vehicle correctly could result in loss of control and/or a rollover accident.**
- **Always use tires of the same type, size, brand, construction (bias, bias-belted, or radial), and tread pattern on all four wheels. Install tire chains on the front wheels when driving on slippery roads and drive carefully.**
- **Be sure to check the brakes immediately after driving in mud or water. For additional information, see "Brake system" (P. 5-230).**
- **Avoid parking your vehicle on steep hills. If you get out of the vehicle and it rolls forward, backward or sideways, you could be injured.**
- **Whenever you drive off-road through sand, mud or water as deep as the wheel hub, more frequent maintenance may be required.**

⚠ WARNING

Do not operate the push-button ignition switch while driving the vehicle except in an emergency. (The engine will stop when the ignition switch is pushed three consecutive times in quick succession or the ignition switch is pushed and held for more than 2 seconds.) If the engine stops while the vehicle is being driven, this could lead to a crash and serious injury.

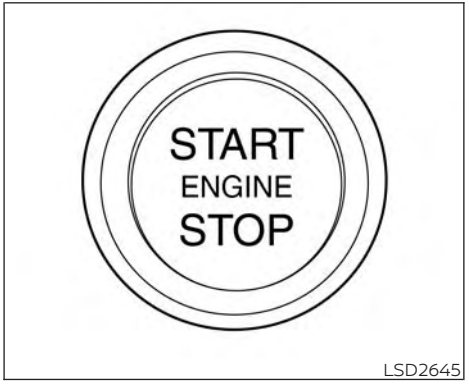

LSD2645

When the ignition switch is pushed without depressing the brake pedal, the ignition switch will illuminate.

Push the ignition switch center:

- Once to change to ON.
- Two times to change to OFF.

The ignition switch will automatically return to the LOCK position when any door is either opened or closed with the switch in the OFF position.

When the ignition switch cannot be placed in the OFF position, proceed as follows:

1. Push the park button to shift to the P (Park) position.
2. Push the ignition switch. The ignition switch position will change to the ON position.
3. Push the ignition switch again to the OFF position.

The shift position can be moved from the P (Park) position if the ignition switch is in the ON position and the brake pedal is depressed.

If the battery of the vehicle is discharged, the ignition switch cannot be moved from the LOCK position.

Some indicators and warnings for operation are displayed on the vehicle information display. For additional information, see "Vehicle information display – 7 inch (18 cm) Type A (if so equipped)" (P. 2-24) or "Vehicle information display – 12.3 inch (31 cm) Type B (if so equipped)" (P. 2-49).

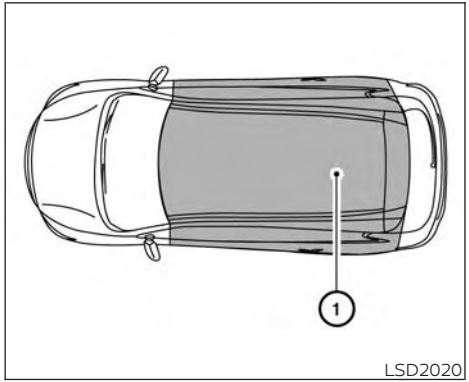

OPERATING RANGE

The Intelligent Key functions can only be used when the Intelligent Key is within the specified operating range.

When the Intelligent Key battery is almost discharged or strong radio waves, noises are present near the operating location, the Intelligent Key system's operating range becomes narrower and may not function properly.

If the Intelligent Key is within the operating range, it is possible for anyone, even someone who does not carry the Intelligent Key, to push the ignition switch to start the engine.

The operating range of the engine start function is inside of the vehicle ①.

- The luggage area is not included in the operating range, but the Intelligent Key may function.
- If the Intelligent Key is placed on the instrument panel or inside the glove box, storage bin or door pocket, the Intelligent Key may not function.
- If the Intelligent Key is placed near the door or window outside the vehicle, the Intelligent Key may function.

PUSH-BUTTON IGNITION SWITCH POSITIONS

LOCK (Normal parking position)

The ignition switch can only be locked in this position.

The ignition switch will be unlocked when it is pushed to the ON position while carrying the Intelligent Key.

The ignition switch will lock when any door is opened or closed with the ignition switched off.

ON (Normal operating position)

This position turns on the ignition system and electrical accessories.

ON has a battery saver feature that will place the ignition switch in the OFF position, if the vehicle is not running, after some time.

The battery saver feature will cancel when the engine is started or when the vehicle is driven.

⚠ CAUTION

Do not leave the vehicle with the ignition switch in the ON position when the engine is not running for an extended period. This can discharge the battery.

OFF

The ignition switch is in the OFF position when the engine is turned off using the ignition switch. No lights will illuminate on the ignition switch.

AUTO ACC:

With the vehicle in the P (Park) position, the Intelligent Key with you and the ignition switch placed from the ON position to the OFF position, the radio can still be used for a period of time, or until the driver's door is opened.

After a period of time, functions such as radio, navigation, and Bluetooth® Hands-Free Phone System may be restarted by pressing the POWER button/VOLUME control knob or the key fob unlock button. For additional information, refer to the separate NissanConnect® Owner's Manual.

EMERGENCY ENGINE SHUT OFF

To shut off the engine in an emergency situation while driving, perform the following procedure:

- Rapidly push the ignition switch three consecutive times in less than 1.5 seconds, or
- Push and hold the ignition switch for more than 2 seconds.

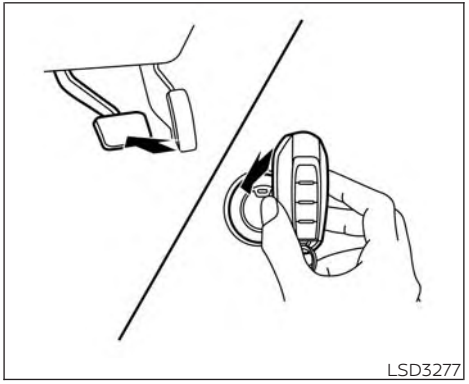
LSD3277

NISSAN INTELLIGENT KEY® BATTERY DISCHARGE

If the battery of the NISSAN Intelligent Key® is discharged or environmental conditions interfere with the Intelligent Key operation, start the engine according to the following procedure:

1. Push the park button to shift to the P (Park) position.
2. Firmly apply the foot brake.
3. Touch the ignition switch with the Intelligent Key as illustrated. (A chime will sound.)
4. Push the ignition switch while depressing the brake pedal within 10 seconds after the chime sounds. The engine will start.

NOTE:

- **When the ignition switch is pushed to the ON position or the engine is started by the above procedures, the "Key Battery Low" warning appears (in the vehicle information display) even if the Intelligent Key is inside the vehicle. This is not a malfunction. To turn off the warning, touch the ignition switch with the Intelligent Key again.**
- **If the "Key Battery Low" warning appears, replace the battery as soon as possible. For additional information, see "Battery replacement" (P. 8-30).**

NISSAN VEHICLE IMMOBILIZER SYSTEM

The NISSAN Vehicle Immobilizer System will not allow the engine to start without the use of the registered key.

If the engine fails to start using a registered key (for example, when interference is caused by another registered key, an automated toll road device or automatic payment device on the key ring), restart the engine using the following procedure:

1. Leave the ignition switch in the ON position for approximately 5 seconds.
2. Place the ignition switch in the OFF or LOCK position, and wait approximately 10 seconds.
3. Repeat steps 1 and 2.
4. Restart the engine while holding the device (which may have caused the interference) separate from the registered key.

If the no start condition re-occurs, NISSAN recommends placing the registered key on a separate key ring to avoid interference from other devices.

- Make sure the area around the vehicle is clear.
- Check fluid levels such as engine oil, coolant, brake fluid, and windshield-washer fluid as frequently as possible, or at least whenever you refuel.
- Check that all windows and lights are clean.
- Visually inspect tires for their appearance and condition. Also check tires for proper inflation.
- Lock all doors.
- Position seat and adjust headrests/head restraints.
- Adjust inside and outside mirrors.
- Fasten seat belts and ask all passengers to do likewise.
- Check the operation of warning lights when the ignition switch is pushed to the ON position. For additional information, see "Warning lights, indicator lights and audible reminders" (P. 2-12).

1. Apply the parking brake.
2. Confirm that the vehicle is in the P (Park) position.

   The Intelligent Key must be carried when operating the ignition switch.
3. Push the ignition switch to the ON position. Depress the brake pedal and push the ignition switch to start the engine.

   To start the engine immediately, push and release the ignition switch while depressing the brake pedal with the ignition switch in any position.
   - If the engine is very hard to start in extremely cold weather or when restarting, depress the accelerator pedal a little (approximately 1/3 to the floor) and while holding, crank the engine. Release the accelerator pedal when the engine starts.
   - If the engine is very hard to start because it is flooded, depress the accelerator pedal all the way to the floor and hold it. Push the ignition switch to the ON position to start cranking the engine. After 5 or 6 seconds, stop cranking by pushing the ignition

switch to the LOCK position. After cranking the engine, release the accelerator pedal. Crank the engine with your foot off the accelerator pedal by depressing the brake pedal and pushing the ignition switch to start the engine. If the engine starts, but fails to run, repeat the above procedure.

⚠CAUTION

Do not operate the starter for more than 15 seconds at a time. If the engine does not start, push the ignition switch to the OFF position and wait 10 seconds before cranking again, otherwise the starter could be damaged.

4. **Warm-up:**

   Allow the engine to idle for at least 30 seconds after starting. Do not race the engine while warming it up. Drive at a moderate speed for a short distance first, especially in cold weather. In cold weather, keep the engine running for a minimum of 2 to 3 minutes before shutting it off. Starting and stopping the engine over a short period of time may make the vehicle more difficult to start.

5. To stop the engine, push the park button to shift to the P (Park) position, and push the ignition switch to the OFF position.

NOTE:
Care should be taken to avoid situations that can lead to potential battery discharge and potential no-start conditions such as:

1. **Installation or extended use of electronic accessories that consume battery power when the engine is not running (phone chargers, GPS, DVD players, etc.).**
2. **The vehicle is not driven regularly and/or only driven short distances.**

In these cases, the battery may need to be charged to maintain battery health.

REMOTE ENGINE START (if so equipped)

Vehicles started with the Remote Engine Start require the ignition switch to be placed in the ON position before the shift position can be shifted from the P (Park) position. To place the ignition switch in the ON position, follow these steps:

1. Make sure that the Intelligent Key is on you.
2. Apply the brake.
3. Push the ignition switch once to the ON position.

For additional information, see "NISSAN Intelligent Key® system" (P. 3-7).

ENGINE PROTECTION MODE

The engine has an engine protection mode to reduce the chance of damage if the coolant temperature becomes too high (for example, when climbing steep grades in high temperatures with heavy loads, such as when towing a trailer). When the engine temperature reaches a certain level:

- The engine coolant temperature gauge will move toward the H position.
- Engine power may be reduced.
- The air conditioning cooling function may be automatically turned off for a short time (the blower will continue to operate).

Engine power and, under some conditions, vehicle speed will decrease. Vehicle speed can be controlled with the accelerator pedal, but the vehicle may not accelerate at the desired speed. The transmission will downshift or upshift as it reaches prescribed shift points. You can also shift manually.

As driving conditions change and engine coolant temperature is reduced, vehicle speed can be increased using the accelerator pedal, and the air conditioning cooling function will automatically be turned back on.

The Malfunction Indicator Light (MIL) may also come on if the engine coolant temperature is not reduced or the air conditioning cooling function does not turn back on. If **only** it remains on, you do not need to have your vehicle towed, but have it inspected soon. It is recommended that you visit a NISSAN dealer for this service. For additional information, see "Malfunction Indicator Light (MIL)" (P. 2-21) or (P. 2-69).

⚠ WARNING

Overheating can result in reduced engine power and vehicle speed. The reduced speed may be lower than other traffic, which could increase the chance of a collision. Be especially careful when driving. If the vehicle cannot maintain a safe driving speed, pull to the side of the road in a safe area. Allow the engine to cool and return to normal operation. For additional information, see "If your vehicle overheats" (P. 6-18).

⚠ CAUTION

Running the engine with the engine oil pressure warning light on could cause serious damage to the engine almost immediately. Such damage is not covered by warranty. Turn off the engine as soon as it is safe to do so.

AUTOMATIC TRANSMISSION (A/T)

⚠ WARNING

- **Do not depress the accelerator pedal while shifting from P (Park) or N (Neutral) to R (Reverse), D (Drive), or M (Manual). Always depress the brake pedal until shifting is completed. Failure to do so could cause you to lose control and have an accident.**
- **Cold engine idle speed is high, so use caution when shifting into a forward or reverse gear before the engine has warmed up.**
- **Do not downshift abruptly on slippery roads. This may cause a loss of control.**

- **Never shift to either the P (Park) or R (Reverse) position while the vehicle is moving forward and P (Park) or D (Drive) position while the vehicle is reversing. This could cause an accident or damage the transmission.**

⚠CAUTION

- **To avoid possible damage to your vehicle; when stopping the vehicle on an uphill grade, do not hold the vehicle by depressing the accelerator pedal. The foot brake should be used for this purpose.**
- **Except in an emergency, do not shift to the N (Neutral) position while driving. Coasting with the transmission in the N (Neutral) position may cause serious damage to the transmission.**
- **WARM UP THE ENGINE — Due to the higher idle speeds, the engine is cold. Extra caution must be exercised when shifting the shift lever into a driving position immediately after starting the engine.**

The A/T in your vehicle is electronically controlled to produce maximum power and smooth operation.

The recommended operating procedures for this transmission are shown on the following pages. Follow these procedures for maximum vehicle performance and driving enjoyment.

Engine power may be automatically reduced to protect the A/T if the engine speed increases quickly when driving on slippery roads or while being tested on some dynamometers.

Starting the vehicle

1. After starting the engine, fully depress the foot brake pedal before moving the shift position out of the P (Park) position. **This Automatic Transmission is designed so that the foot brake pedal must be depressed before shifting from P (Park) to any driving position while the ignition switch is in the ON position.**
   The shift position cannot be shifted out of the P (Park) position and into any of the other positions if the ignition switch is placed in the OFF position.
2. Keep the foot brake pedal depressed and move the shift lever to a driving position.
3. Release the parking brake and foot brake pedal and then gradually start the vehicle in motion.

⚠WARNING

- **Do not depress the accelerator pedal while shifting from P (Park) or N (Neutral) to R (Reverse), D (Drive) or M (Manual). Always depress the brake pedal until shifting is completed. Failure to do so could cause you to lose control and have an accident.**
- **Cold engine idle speed is high, so use caution when shifting into a forward or reverse gear before the engine has warmed up.**
- **Do not downshift abruptly on slippery roads. This may cause a loss of control.**
- **Never shift to either the P (Park) or R (Reverse) position while the vehicle is moving forward and P (Park) or D (Drive) position while the vehicle is reversing. This could cause an accident or damage the transmission.**

⚠CAUTION

- **To avoid possible damage to your vehicle; when stopping the vehicle on an uphill grade, do not hold the vehicle by depressing the accelerator pedal. The foot brake should be used for this purpose.**
- **Except in an emergency, do not shift to the N (Neutral) position while driving. Coasting with the transmission in the N (Neutral) position may cause serious damage to the transmission.**
- **WARM UP THE ENGINE — Due to the higher idle speeds, the engine is cold. Extra caution must be exercised when shifting the shift lever into a driving position immediately after starting the engine.**

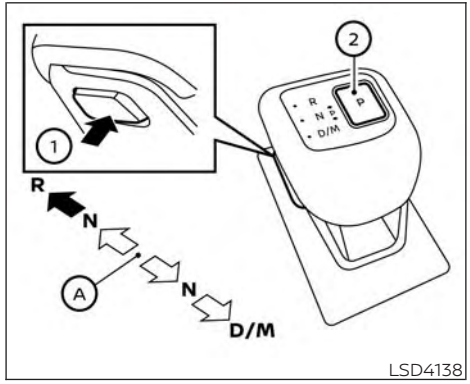

LHD shown, RHD similar

Shifting

Ⓐ Home position (central position)

To move the shift lever

➡ Press the button ① to shift

⇨ Shift without pressing the button ①

- **Shift to PARK**

  Push the park button ②

- **Shift to REVERSE**

Push the shift lever button ①

Move the shift lever from the home position to the R (Reverse) position

- **Shift to NEUTRAL**
  - —From P (Park) and D (Drive)
    Without pushing the shift lever button, push the shift lever forward (1 notch) from the home position and hold 0.5 seconds.
  - —From P (Park) and R (Reverse)
    Without pushing the shift lever button, pull the shift lever backward (1 notch) from the home position and hold 0.5 seconds.
- **Shift to DRIVE**

  Pull the shift lever from the home position to D (Drive) position

⚠WARNING

Apply the electronic parking brake if the shift lever is in any position while the engine is not running. Failure to do so could cause the vehicle to move unexpectedly or roll away and result in serious personal injury or property damage.

⚠ CAUTION

- **Use the P (Park), R (Reverse) or D (Drive) position only when the vehicle is completely stopped.**
- **When switching to the desired shift position by operating the shift lever, check that the shift lever returns to the home position by releasing your hand from the lever. Holding the shift lever in a mid-way position may also damage the shift control system.**
- **Do not operate the shift lever while the accelerator pedal is depressed. This may cause a sudden start which could result in an accident.**
- **The following operations are not allowed because excessive force would be applied to the transmission and this may result in damage to the vehicle:**
  - **Moving the shift lever to the R (Reverse) position when driving forward**
  - **Moving the shift lever to the D (Drive) position when reversing**

If the vehicle is moving over 8 km/h (5 mph) when shifting to D (Drive) from R (Reverse), the N (Neutral) position will automatically be selected. A buzzer will sound, noting that D (Drive) was not selected. When selecting D (Drive) while reversing below 8 km/h (5 mph) the range will change normally.

If these operations are attempted, a chime sounds and the vehicle shifts to the N (Neutral) position.

P (Park)

⚠ CAUTION

- **To prevent transmission damage, use the P (Park) position only when the vehicle is completely stopped.**
- **Do not slide the shift lever while pressing the park button. This may damage the shift control system.**

Use the P (Park) position when the vehicle is parked or when starting the engine. Make sure the vehicle is completely stopped before pressing the park button to engage the P (Park) position. For maximum safety, the brake pedal must be depressed before engaging the P (Park) position. Use this position together with the electronic parking brake. When parking on a hill, first depress the brake pedal, apply the electronic parking brake and then engage the P (Park) position. The parking lock should not be used as a brake when parking. In order to secure the vehicle, always apply the electronic parking brake in addition to the parking lock.

In the event of a malfunction of the vehicle's electronics, the transmission may lock in the P (Park) position. Have the vehicle's electronics checked immediately. It is recommended that you visit a NISSAN dealer for this service.

The P (Park) position is automatically engaged if:

- You place the ignition switch in the OFF position
- You unfasten the driver's seat belt and open the driver side door when the vehicle is stationary or driving at very low speed and the transmission is in the D (Drive) position, N (Neutral) position, R (Reverse) position and M (Manual) mode with your foot off the brake.

⚠ CAUTION

To avoid A/T malfunction, you must manually place the shift position in the P (Park) position under the above conditions.

R (Reverse)

⚠CAUTION

To prevent transmission damage, use the R (Reverse) position only when the vehicle is completely stopped and the brake is pressed.

Use the R (Reverse) position to back up. Make sure the vehicle is completely stopped before selecting the R (Reverse) position. **The brake pedal must be depressed and the shift lever button pressed to move the shift lever from the home position to R (Reverse). If the vehicle is placed in R (Reverse) position while the vehicle is moving forward, the chime will sound and the vehicle will switch into the N (Neutral) position.**

NOTE:

If the vehicle is moving over 8 km/h (5 mph) when shifting to (D) Drive from (R) Reverse, the (N) Neutral position will automatically be selected. A buzzer will sound, noting that (D) Drive was not selected. When selecting (D) Drive while reversing below 8 km/h (5 mph), the range will change normally.

N (Neutral)

Neither forward nor reverse gear is engaged when the vehicle is completely stopped, and the brake is pressed. The engine can be started in this position. You may shift to the N (Neutral) position and restart a stalled engine while the vehicle is moving.

You can select this position by holding the shift lever at this position for 0.5 seconds.

D (Drive)

Use this position for all normal forward driving when the vehicle is completely stopped and the brake is pressed. The A/T changes gears automatically. All forward gears are available. **If the vehicle is placed in the D (Drive) position while the vehicle is reversing, the chime will sound and the vehicle will switch into the N (Neutral) position.**

NOTE:

If the vehicle is moving over 8 km/h (5 mph) when shifting to (D) Drive from (R) Reverse, the (N) Neutral position will automatically be selected. A buzzer will sound, noting that (D) Drive was not selected. When selecting (D) Drive while reversing below 8 km/h (5 mph), the range will change normally.

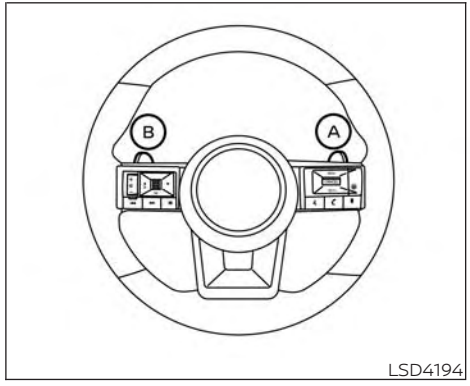

LSD4194

Manual shift mode

When the shift lever is moved to the D (Drive) position again with the vehicle in the D (Drive) position while driving, the transmission enters the manual shift mode. Shift range can be selected manually by using the paddle shifters on the steering wheel.

When shifting up, pull the right-side paddle shifter (+) Ⓐ. The transmission shifts to the higher range.

When shifting down, pull the left-side paddle shifter (–) Ⓑ. The transmission shifts to the lower range.

When canceling the manual shift mode, move the shift lever to the D (Drive) position again. The transmission returns to the normal driving mode.

When you pull the paddle shifter while in the D (Drive) position, the transmission will shift to the upper or lower range temporarily. The transmission will automatically return to the D (Drive) position after a short period of time. If you want to return to the D (Drive) position manually, pull and hold the paddle shifter for about 1.5 seconds.

In the manual shift mode, the shift range is displayed in the vehicle information display.

Shift ranges up or down one by one as follows:

1M⇔ 2M ⇔ 3M ⇔ 4M ⇔ 5M ⇔ 6M ⇔ 7M ⇔ 8M ⇔ 9M

9M (9th) and 8M (8th)

Use this position for all normal forward driving at highway speeds.

7M (7th), 6M (6th) and 5M (5th)

Use these positions when driving up long slopes, or for engine braking when driving down long slopes.

4M (4th), 3M (3rd) and 2M (2nd)

Use these positions for hill climbing or engine braking on downhill grades.

1M (1st)

Use this position when climbing steep hills slowly or driving slowly through deep snow, or for maximum engine braking on steep downhill grades.

- Remember not to drive at high speeds for extended periods of time in lower than the 8th range. This reduces fuel economy.
- Pulling the same paddle shifter twice will shift the ranges in succession. However, if this motion is rapidly done, the second shifting may not be completed properly.
- **In the manual shift mode, the transmission may not shift to the selected gear. This helps maintain driving performance and reduces the chance of vehicle damage or loss of control.**
- **In the manual shift mode, the transmission may shift up automatically to a higher range than selected if the engine speed is too high. When the vehicle speed decreases, the transmission automatically shifts down and shifts to 1st gear before the vehicle comes to a stop.**

Neutral hold mode function (if so equipped)

This function enables you to get out of the vehicle when it is in the N (Neutral) position, while the engine is running. While this function is activated, the vehicle can be moved by pushing with hand (when car washing). When using this function, release the electronic parking brake.

⚠ WARNING

- **Use this function on a level surface only. Failure to do so may cause the vehicle to move accidentally and could result in a collision or serious personal injury.**
- **Do not use this function for a purpose other than car washing.**
- **Do not turn the engine off after neutral hold mode function is activated, otherwise the N (Neutral) position will not be kept and the vehicle will automatically be placed in the P (Park) position.**
- **If this function is not activated regardless of proper operation, transmission may malfunction. It is recommended that you visit a NISSAN dealer for this service.**

To activate the Neutral hold mode, perform the following operations:

1. Push the ignition switch to start the engine.
2. Release the electronic parking brake.
3. Depress and hold the brake pedal.
4. Push the P (Park) button.
5. Slide the shift lever to the N (Neutral) position, and hold it for 0.5 second until "N" appears in the vehicle information display.
6. Slide the shift lever to the N (Neutral) position again, and hold it for 0.5 seconds, until a message "Neutral Hold Mode has been activated" appears in the vehicle information display. For additional information, see "Neutral Hold Mode activated" (P. 2-42) or (P. 2-70).
7. The ignition switch has to be kept in the ON position. Otherwise Neutral hold mode is canceled and the P (Park) position is engaged automatically.

To exit the Neutral hold mode, place the shift lever in any position other than the N (Neutral) position.

NOTE:

- **It is necessary to perform the steps 4 through 6 within approximately 5 seconds to prevent incorrect operation.**
- **When the shifter is changed to the N (Neutral) position, approximately 5 seconds later, a message will appear in the vehicle information display. For additional information, see "Neutral Hold Mode guidance" (P. 2-42) or (P. 2-70).**
- **If the Neutral hold mode is unavailable, a message will appear in the vehicle information display. For additional information, see "Neutral Hold Mode was not activated" (P. 2-42) or (P. 2-70). To activate the Neutral hold mode, wait for a while without shifting operation and then perform the operations again.**

Accelerator downshift — in D (Drive) position —

For passing or hill climbing, depress the accelerator pedal to the floor. This shifts the transmission down into a lower gear, depending on the vehicle speed.

High fluid temperature protection mode

This transmission has a high fluid temperature protection mode. If the fluid temperature becomes too high (for example, when climbing steep grades in high temperatures with heavy loads, such as when towing a trailer), engine power and, under some conditions, vehicle speed will be decreased automatically to reduce the chance of transmission damage. Vehicle speed can be controlled with the accelerator pedal, but the engine and vehicle speed may be limited.

Fail-safe

When the fail-safe operation occurs, please note that the transmission will be locked in any of the forward gears according to the condition.

If the vehicle is driven under extreme conditions, such as excessive wheel spinning and subsequent hard braking, the fail-safe system may be activated. The Malfunction Indicator Light (MIL) may come on to indicate the fail-safe mode is activated. For additional information, see "Malfunction Indicator Light (MIL)" (P. 2-21). This will occur even if all

electrical circuits are functioning properly. In this case, place the ignition switch in the OFF position and wait for 10 seconds. Then push the switch back to the ON position. The vehicle should return to its normal operating condition. If it does not return to its normal operating condition, have the transmission checked and repaired, if necessary. It is recommended that you visit a NISSAN dealer for this service.

⚠ WARNING

When the high fluid temperature protection mode or fail-safe operation occurs, vehicle speed may be gradually reduced. The reduced speed may be lower than other traffic, which could increase the chance of a collision. Be especially careful when driving. If necessary, pull to the side of the road at a safe place and allow the transmission to return to normal operation, or have it repaired if necessary.

⚠ WARNING

- **Be sure the parking brake is fully released before driving. Failure to do so can cause brake failure and lead to an accident.**
- **Do not release the parking brake from outside the vehicle.**
- **Do not use the shift lever in place of the parking brake. When parking, be sure the parking brake is fully engaged.**
- **To help avoid risk of injury or death through unintended operation of the vehicle and/or its systems, do not leave children, people who require the assistance of others or pets unattended in your vehicle. Additionally, the temperature inside a closed vehicle on a warm day can quickly become high enough to cause a significant risk of injury or death to people and pets.**

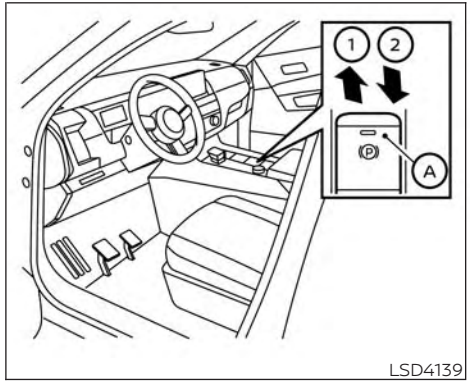

ELECTRONIC PARKING BRAKE (switch type)

The electronic parking brake can be applied or released by operating the parking brake switch.

⚠ WARNING

- **Before leaving the vehicle, move the shift position to the P (Park) position and check that the electronic parking brake warning light is illuminated to confirm that the electronic parking brake is applied. The electronic parking brake warning light will remain on for a period of time after the driver's door is locked.**

⚠ CAUTION

When parking in an area where the outside temperature is below 0°C (32°F), the parking brake, if applied, may freeze in place and may be difficult to release.

For safe parking, it is recommended that you place the shift position in the P (Park) position and securely block the wheels.

NOTE:

- **To keep the electronic parking brake released after the engine is turned off, place the ignition switch in the OFF position, depress the brake pedal and push down the parking brake switch before opening the driver's door.**
- **If a malfunction occurs in the electronic parking brake system (for example, due to battery discharge), it is recommended that you visit a NISSAN dealer.**
- **Under the following conditions, electronic parking brake will automatically be applied and the braking force of Automatic brake hold will be released:**
  - **The braking force is applied by Automatic brake hold function for 3 minutes or longer.**
  - **The vehicle is in the P (Park) position.**
  - **The electronic parking brake is applied manually.**
  - **The driver's seat belt is unfastened.**
  - **The driver's door is opened**
  - **The ignition switch is placed in the OFF position**
  - **A malfunction occurs in Automatic brake hold function**

Manual operation

To apply: Pull the switch up ①. The indicator light Ⓐ will illuminate.

To release: With the ignition switch in the ON position, depress the brake pedal and push the switch down ②. The indicator light Ⓐ will turn off.

Before driving, check that the electronic parking brake indicator light (Ⓟ or PARK) goes out. For additional information, see "Warning lights, indicator lights and audible reminders" (P. 2-12).

NOTE:

- **A buzzer will sound if the vehicle is driven without releasing the parking brake. For additional information, see "Warning lights, indicator lights and audible reminders" (P. 2-12).**
- **While the electronic parking brake is applied or released, an operating sound is heard from the lower side of the rear seat. This is normal and does not indicate a malfunction.**

- **When the electronic parking brake is frequently applied and released in a short period of time, the parking brake may not operate in order to prevent the parking brake system from overheating. If this occurs, operate the electronic parking brake switch again after waiting approximately 1 minute.**
- **If the electronic parking brake must be applied while driving in an emergency, pull up and hold the parking brake switch. When you release the parking brake switch, the parking brake will be released.**
- **While pulling up the electronic parking brake switch during driving, the parking brake is applied and a chime sounds. The electronic parking brake indicator light in the meter and in the parking brake switch illuminates. This does not indicate a malfunction. The electronic parking brake indicator light in the meter and in the parking brake switch turns off when the parking brake is released.**
- **When pulling the electronic parking brake switch up with the ignition switch in the OFF or AUTO ACC position, the parking brake switch indicator light will continue to illuminate for a short period of time.**

The automatic brake hold function maintains the braking force without the driver having to depress the brake pedal when the vehicle is stopped at a traffic light or intersection. As soon as the driver depresses the accelerator pedal again, the automatic brake hold function is deactivated and the braking force is released. The operating status of the automatic brake hold can be displayed.

To use the automatic brake hold function, the following conditions need to be met:

- The driver's seat belt is fastened.
- The electronic parking brake is released.
- The vehicle is not in the P (Park) position.
- The vehicle is not parked on a steep hill.

For additional information, see "Warning lights, indicator lights and audible reminders" (P. 2-12).

⚠WARNING

- **The automatic brake hold function is not designed to hold the vehicle on a steep hill or slippery road. Never use the automatic brake hold function when the vehicle is stopped on a steep hill or slippery road. Failure to do so may cause the vehicle to move.**
- **Warnings may appear to request that the driver retake control by depressing the brake pedal.**
- **When the automatic brake hold function is activated but fails to maintain the vehicle at a standstill, depress the brake pedal to stop the vehicle. If the vehicle unexpectedly moves due to outside conditions, the chime may sound and warnings may appear.**
- **Be sure to deactivate the automatic brake hold function when using a car wash or towing your vehicle.**
- **Make sure to place the shift position in the P (Park) position and apply the parking brake when parking your vehicle, entering or exiting the vehicle, or loading luggage. Failure to do so could cause the vehicle to move or roll away unexpectedly and result in serious personal injury or property damage.**
- **If any of the following conditions occur, the automatic brake hold function may not function. Have the system checked promptly. It is recommended that you visit a NISSAN dealer for this service.**
  - **A warning message appears.**

– **The indicator light on the automatic brake hold switch does not illuminate when the switch is pushed.**

- **Failure to operate the vehicle in accordance with these conditions could cause the vehicle to move or roll away unexpectedly and result in serious personal injury or property damage.**
- **The automatic brake hold function will not be activated if the Slip indicator light, electronic parking brake warning light or master warning light illuminate and the chassis control system fault message appears in the vehicle information display.**
- **Automatic brake hold function is operated by applying sufficient braking force to hold the vehicle in its place, so there are cases when this hold function is maintained even if the accelerator pedal is depressed. In this situation, it is advised to depress the brake pedal first, then to turn off Automatic brake hold switch. This will cancel the hold function.**
- **To maintain the braking force to keep the vehicle to a standstill, a noise may be heard. This is not a malfunction.**

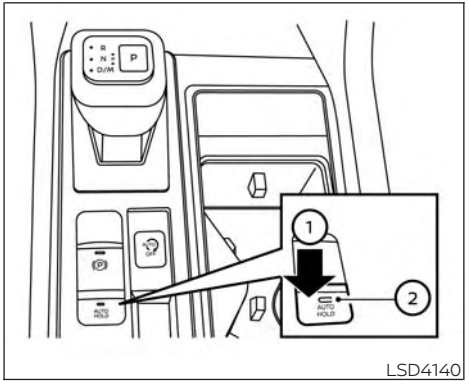

LSD4140

HOW TO ACTIVATE/DEACTIVATE THE AUTOMATIC BRAKE HOLD FUNCTION

How to activate the automatic brake hold function

1. With the ignition switch in the ON position, push the automatic brake hold switch ①. The indicator light on the automatic brake hold switch ② illuminates.
2. When the automatic brake hold function goes into standby, the automatic brake hold indicator light (white) illuminates.

To use the automatic brake hold function, the following conditions need to be met:

- The driver's seat belt is fastened.
- The electronic parking brake is released.
- The vehicle is not in the P (Park) position.
- The vehicle is not parked on a steep hill.

NOTE:

The automatic brake hold function retains the last state until the driver changes the option even if the ignition switch is off.

How to deactivate the automatic brake hold function

While the automatic brake hold function is activated, push the automatic brake hold switch to turn off the automatic brake hold indicator light and deactivate the automatic brake hold function. To deactivate the automatic brake hold function while the brake force has been maintained by the automatic brake hold function, depress the brake pedal and push the automatic brake hold switch.

⚠ WARNING

Make sure to firmly depress and hold the brake pedal when turning off the automatic brake hold function while the brake force is applied. When the automatic brake hold function is deactivated, the brake force will be released. This could cause the vehicle to move or roll away unexpectedly. Failure to prevent the vehicle from rolling may result in serious personal injury or property damage.

HOW TO USE THE AUTOMATIC BRAKE HOLD FUNCTION

For additional information on using the automatic brake hold function, refer to the instructions outlined in this section.

To maintain braking force automatically

With the automatic brake hold function activated and the automatic brake hold indicator light (white) illuminated, depress the braking pedal to stop the vehicle and the automatic brake hold indicator light (green) illuminates. The brake force is automatically applied without your foot depressed on the brake pedal. While the brake force is maintained, the automatic brake hold indicator light (green) illuminates.

The automatic brake hold indicator light (green) will not illuminate if the brake pedal is not depressed with sufficient force to hold the vehicle or is released too quickly when the vehicle is stopped.

Confirm automatic brake hold indicator light (green) is illuminated before removing your foot from the brake pedal.

To start the vehicle from a standstill

With the vehicle not in the P (Park) or the N (Neutral) position, depress the accelerator pedal while the brake force is maintained. The brake force will automatically be released to restart the vehicle.

The automatic brake hold indicator light (white) illuminates and the automatic brake hold returns to standby.

Parking

When the vehicle is in the P (Park) position with the brake force maintained by the automatic brake hold function, the parking brake will automatically be applied and the brake force of the automatic brake hold will be released. The automatic brake hold indicator light turns off. When the parking brake is applied with the brake force maintained by the automatic brake hold function, the brake force of the automatic brake hold will be released. The automatic brake hold indicator light turns off.

NOTE:

- **Under the following conditions, the electronic parking brake will automatically be applied and the braking force of the automatic brake hold will be released. The automatic brake hold indicator light turns off.**
  - **The braking force is applied by the automatic brake hold function for 3 minutes or longer.**
  - **The vehicle is in the P (Park) position.**
  - **The electronic parking brake is applied manually.**
  - **The driver's seat belt is unfastened.**
  - **The driver's door is opened.**
  - **The ignition switch is placed in the OFF position.**
  - **A malfunction occurs in automatic brake hold function.**
- **When the vehicle stops, but the brake force is not automatically applied, depress the brake pedal firmly until the automatic brake hold indicator light (green) illuminates.**

DRIVE MODE SELECTOR

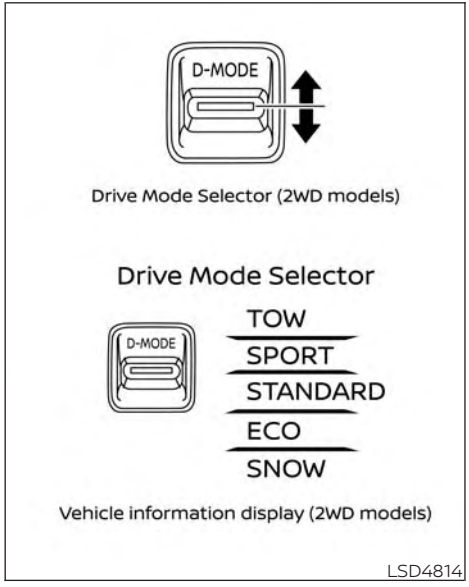

Drive Mode Selector (2WD models)

Multiple driving modes can be selected by using the Drive Mode Selector.

2WD: TOW, SPORT, STANDARD, ECO, and SNOW

To change the mode, push the Drive Mode Selector up or down.

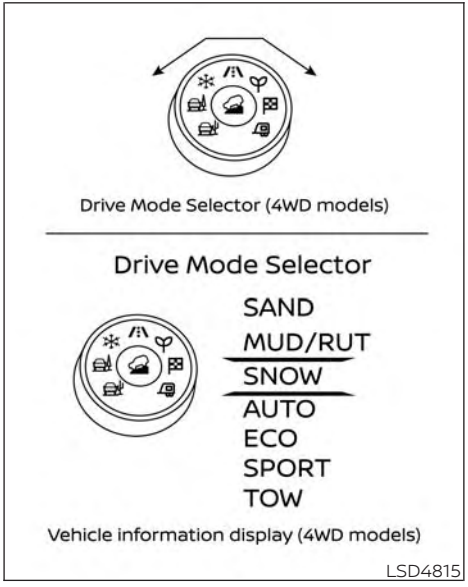

Drive Mode Selector (4WD models)

4WD: SAND, MUD/RUT, SNOW, AUTO, ECO, SPORT, and TOW

To change the mode, turn the Drive Mode Selector right or left.

NOTE:

When the Drive Mode Selector selects a mode, the mode may not switch immediately. This is not a malfunction.

The current mode is displayed in the vehicle information display. The mode list will appear in the vehicle information display and you can select the mode.

NOTE:

The mode list will be turned off in approximately 5 seconds after the mode is selected.
You can also clear the message by pushing the scroll dial on the steering wheel mounted controls.

If the driving mode cannot be switched using the Drive Mode Selector when the ignition switch is in the ON position, have the system checked. It is recommended you visit a NISSAN dealer for this service.

NOTE:

The STANDARD (2WD models)/AUTO (4WD models) MODE will be selected first each time the ignition switch is placed in the ON position.

⚠ WARNING

Do not stare at the Drive Mode Selector or the display while driving so that full attention may be given to vehicle operation.

Avoid abrupt acceleration, steering or sudden braking especially on slippery roads. Otherwise tire slip, skid or tail-swinging occurs; this may cause an accident.

STANDARD MODE (2WD models)/ AUTO MODE (4WD models)

This is the standard mode that is most suitable for normal driving.

SPORT MODE

- Adjusts the engine points for a higher response.
- The setting of the steering system is adjusted to moderately increase steering wheel effort for a sporty feel.

NOTE:

In the SPORT mode, fuel economy may be reduced.

SNOW MODE

This mode makes it easier to start and drive on snowy roads and frozen roads.

⚠ CAUTION

Never drive on dry, hard surface roads in the SNOW mode, as this will overload the powertrain and may cause a serious malfunction. Additionally, this will cause premature tire wear and reduced fuel economy.

When the SNOW mode is selected, small vibration in cornering may occur. This is not a malfunction.

TOW MODE

The TOW mode controls the shifting points to facilitate the acceleration or deceleration while towing.

Regardless of the availability of the tow bar, TOW mode is equipped.

The Idling Stop System is disabled when the vehicle is in TOW mode.

MUD/RUT MODE (4WD models)

This mode allows for easier driving or starting on a bumpy road surface such as an uneven dirt road or a steep uphill slope.

⚠ CAUTION

Never drive on dry, hard surface roads in the MUD/RUT mode, as this will overload the powertrain and may cause a serious malfunction. Additionally, this will cause premature tire wear and reduced fuel economy.

NOTE:

When the MUD/RUT mode is selected, small tight-corner braking phenomenon or small vibration in cornering may occur. This is not a malfunction

SAND MODE (4WD models)

This mode allows for easier driving or starting on sand.

⚠CAUTION

Never drive on dry, hard surface roads in the SAND mode, as this will overload the powertrain and may cause a serious malfunction. Additionally, this will cause premature tire wear and reduced fuel economy.

NOTE:

When the SAND mode is selected, small tight-corner braking phenomenon or small vibration in cornering may occur. This is not a malfunction

ECO MODE

Assists the driver's ECO-driving. The engine points are adjusted for improved fuel economy, providing such driving features as smooth starting or constant cruising.

NOTE:

Selecting the ECO mode will not necessarily improve fuel economy as many driving factors influence its effectiveness.

It is recommended to select another mode other than ECO mode when acceleration is required such as when:

- **Driving with a heavy load of passengers or cargo in the vehicle.**
- **Driving on a steep uphill slope.**

Operation

Push or turn the Drive Mode Selector to the ECO position. "ECO" appears in the vehicle information display and the ECO drive indicator illuminates.

When the accelerator pedal is depressed within the range of economy drive, the ECO drive indicator illuminates in green. When the accelerator pedal is depressed above the range of economy drive, the ECO drive indicator turns off.

The ECO drive indicator will not illuminate in the following cases:

- When the shift lever is in the R (Reverse) position.
- When the vehicle speed is below 3.2 km/h (2 mph) or over 144 km/h (90 mph).
- When the Cruise Control (if so equipped) or Intelligent Cruise Control (ICC) system (if so equipped) is operated.

ECO Customize

The "ECO Customize" is a function that can change the priority from the Cruise Control (if so equipped) or Intelligent Cruise Control (ICC) (if so equipped) to fuel efficiency improvements. It can be set when the ECO mode is selected. To activate or deactivate this function, see "ECO Mode Setting or ECO Settings" (P. 2-33) or (P. 2-60).

- Cruise Control

  When the setting is ON, the fuel efficiency while cruising will be improved by lowering acceleration target from normal (setting OFF) mode.

NOTE:

When the vehicle speed is reduced (for example, when the vehicle is driven on an uphill road from a flat road), it will take more time to return to the previously set speed than normal mode.

Tire Pres ECO advice

The "Tire Pres ECO advice" is a function to show ECO advice information in the vehicle information display when low tire pressure is detected. To activate or deactivate this function, see "ECO Mode Setting" (P. 2-33) or (P. 2-60).

When the setting is on, the ECO Drive Report display shows "See Tire Pressures". You can switch the display to the Tire Pressures display by selecting it in the vehicle information display.

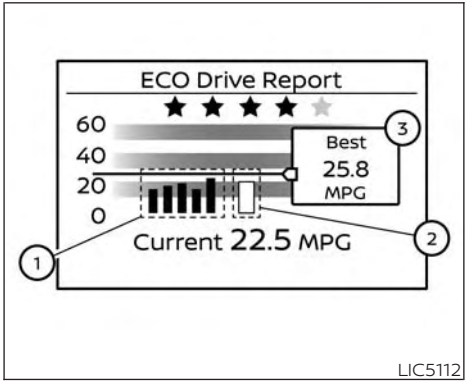

Eco Drive Report

When the ignition switch is in the OFF position, the ECO management display appears.

① Previous 5 times (History)

② Current fuel economy

③ Best fuel economy

The result of ECO evaluation is displayed 30 seconds after the ignition switch is placed in the ON position and the vehicle is driven at least 1/3 miles (500 meters).

① The average fuel economy for the previous 5 times will be displayed.

② The average fuel economy since the last reset will be displayed.

③ The best fuel economy of the past history will be displayed.

The ECO Drive Report can be set to be ON or OFF.

TRAFFIC SIGN RECOGNITION (TSR) (if so equipped)

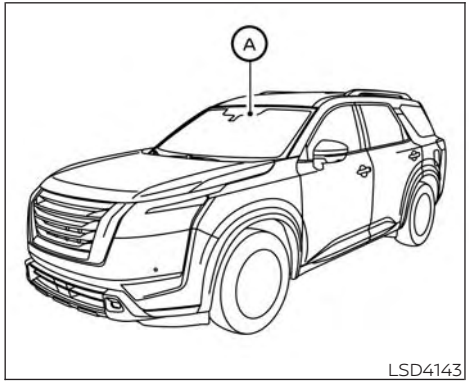

LSD4143

The TSR system provides the driver with information about the most recently detected speed limit. The system captures the road sign information with the multi-sensing front camera unit Ⓐ located on the windshield in front of the inside rear-view mirror and displays the detected signs in the vehicle information display. For vehicles equipped with a navigation system, the speed limit displayed is based on a combination of navigation system data and live camera recognition. TSR information is always displayed at the top of the vehicle information display, and optionally in the main central area of the display screen.

⚠WARNING

The TSR system is only intended to be a support device to help provide the driver with information. It is not a replacement for the driver's attention to traffic conditions or responsibility to drive safely. It cannot prevent accidents due to carelessness. It is the driver's responsibility to stay alert and drive safely at all times.

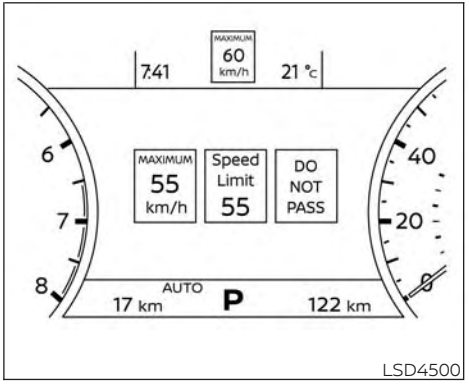

LSD4500

SYSTEM OPERATION

The Traffic Sign Recognition (TSR) system displays the following types of road signs:

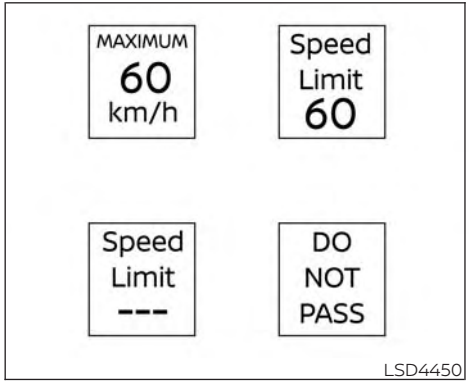

LSD4450

CAUTION

- **The TSR system is intended as an aid to careful driving. It is the driver's responsibility to stay alert, drive safely, and observe all road regulations that currently apply, including looking out for road signs.**

- **The TSR system may not function properly under the following conditions:**
  - **When the road sign is not clearly visible, for example, due to damage or weather conditions.**
  - **When rain, snow or dirt adheres to the windshield in front of the multi-sensing camera unit.**
  - **When the headlights are not bright, for example, due to dirt on the lens or if the aiming is not adjusted properly.**
  - **When strong light enters the camera unit. (For example, the light directly shines on the front of the vehicle at sunrise or sunset.)**
  - **When a sudden change in brightness occurs. (For example, when the vehicle enters or exits a tunnel or under a bridge.)**
  - **If there are deviations in relation to the navigation, for example due to changes in the road routing.**
  - **When overtaking buses or trucks with speed stickers.**

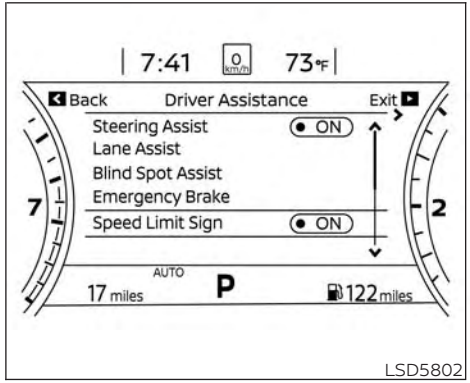

LSD5802

For vehicles with the 7 inch (18 cm) display

TURNING THE TRAFFIC SIGN RECOGNITION (TSR) SYSTEM ON AND OFF

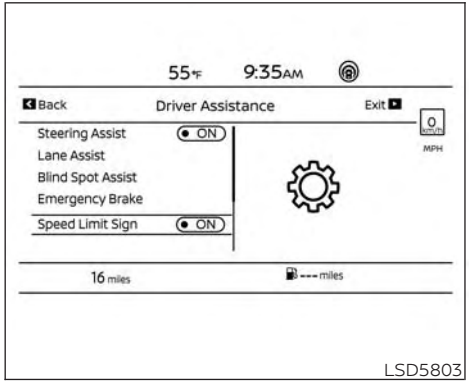

For vehicles with the 12.3 inch (31.2 cm) display

Perform the following steps to enable or disable the TSR system.

1. Press the ◀▶ button until "Settings" displays in the vehicle information display. Use the scroll dial to select "Driver Assistance." Then press the OK button.
2. Select "Speed Limit Sign" or "Traffic Sign" and press the OK button to turn the system on or off.

SYSTEM TEMPORARILY UNAVAILABLE

If the vehicle is parked in direct sunlight under high temperature conditions (over approximately 40°C [104°F]) and then started, the TSR system may be deactivated automatically. The "Unavailable: High Cabin Temperature" or "Not available: High cabin temperature" warning message will appear in the vehicle information display.

Action to take:

When the interior temperature is reduced, the TSR system will resume operating automatically.

SYSTEM MALFUNCTION

If the TSR system malfunctions, it will be turned off automatically and the system "Malfunction" warning message will appear in the vehicle information display.

Action to take:

If the TSR "Malfunction" message appears, pull off the road at a safe location and stop the vehicle. Turn the engine off and restart the engine. If the TSR "Malfunction" message continues to appear, have the system checked. It is recommended that you visit a NISSAN dealer for this service.

SYSTEM MAINTENANCE

The TSR system uses the same multi-sensing front camera unit that is used by the Lane Departure Warning (LDW) system, located in front of the interior rearview mirror. For additional information, see "System maintenance" (P. 5-45).

LANE DEPARTURE WARNING (LDW) (if so equipped)

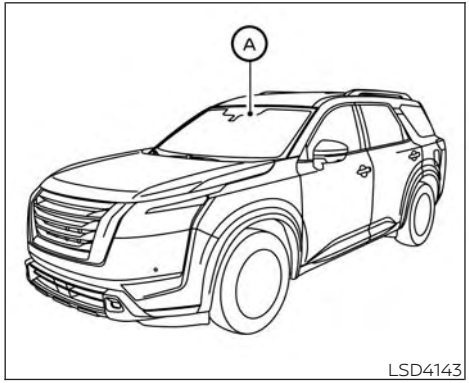

LSD4143

The LDW system will operate when the vehicle is driven at speeds of approximately 60 km/h (37 mph) and above, and only when the lane markings are clearly visible on the road.

The LDW system monitors the lane markers on the traveling lane using the camera unit Ⓐ located above the inside mirror.

The LDW system warns the driver that the vehicle is beginning to leave the driving lane with an indicator and a steering wheel vibration. For additional information, see "LDW system operation" (P. 5-40).

⚠ WARNING

Failure to follow the warnings and instructions for proper use of the LDW system could result in serious injury or death.

- **This system is only a warning device to inform the driver of a potential unintended lane departure. It will not steer the vehicle or prevent loss of control. It is the driver's responsibility to stay alert, drive safely, keep the vehicle in the traveling lane, and be in control of the vehicle at all times.**

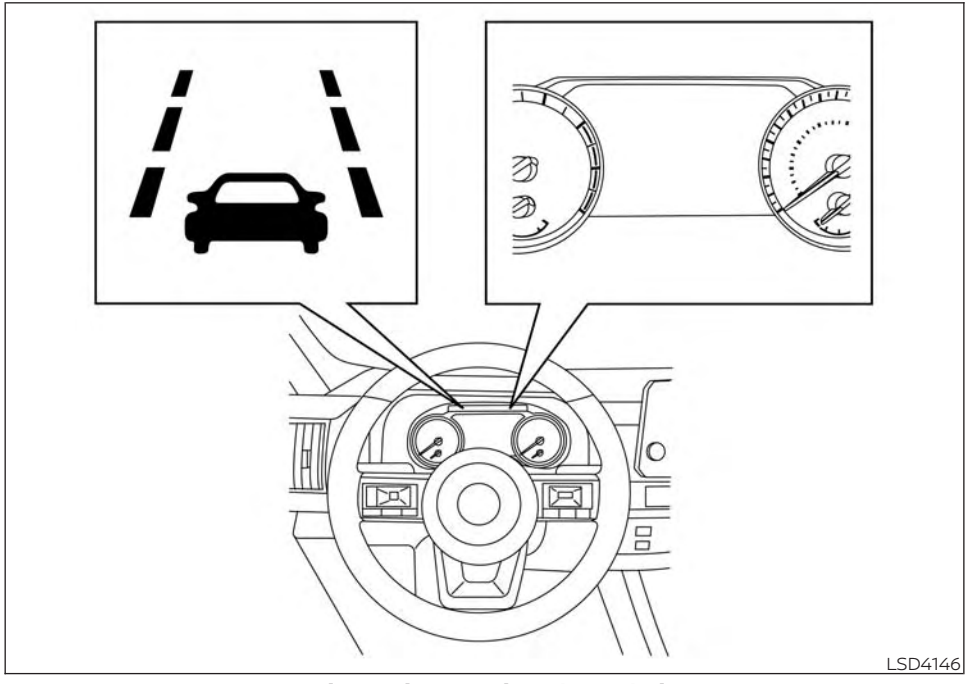

For vehicles with the 7 inch (18 cm) display

LDW SYSTEM OPERATION

The LDW system provides a lane departure warning function when the vehicle is driven at speeds of approximately 60 km/h (37 mph) and above and the lane markings are clear. When the vehicle approaches either the left or the right side of the traveling lane, the steering wheel will vibrate and the LDW indicator on the instrument panel will blink to alert the driver.

The warning function will stop when the vehicle returns inside of the lane markers.

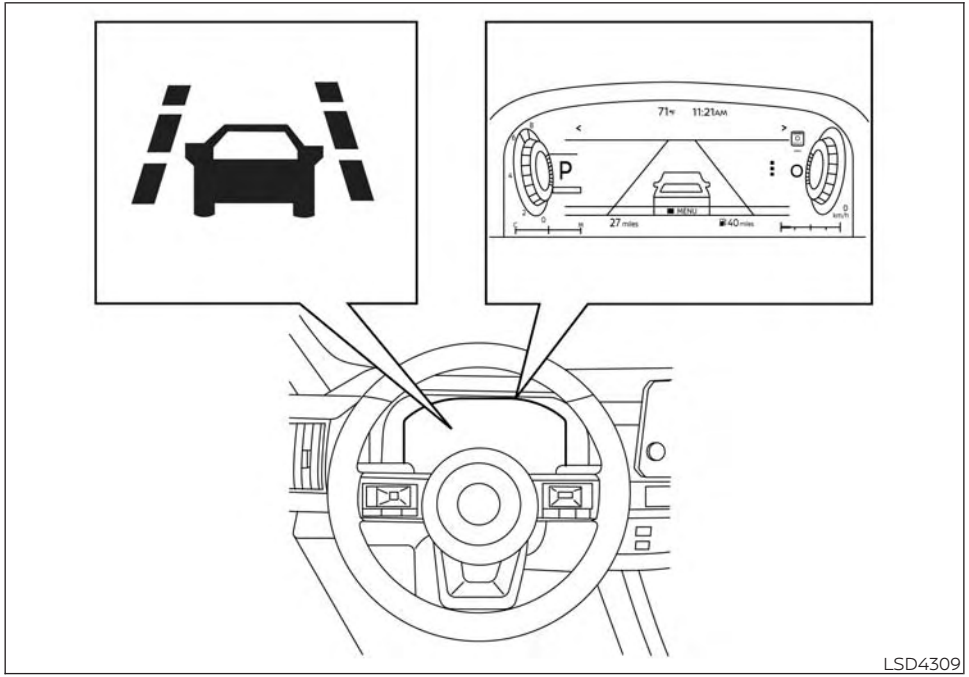

For vehicles with the 12.3 inch (31.2 cm) display

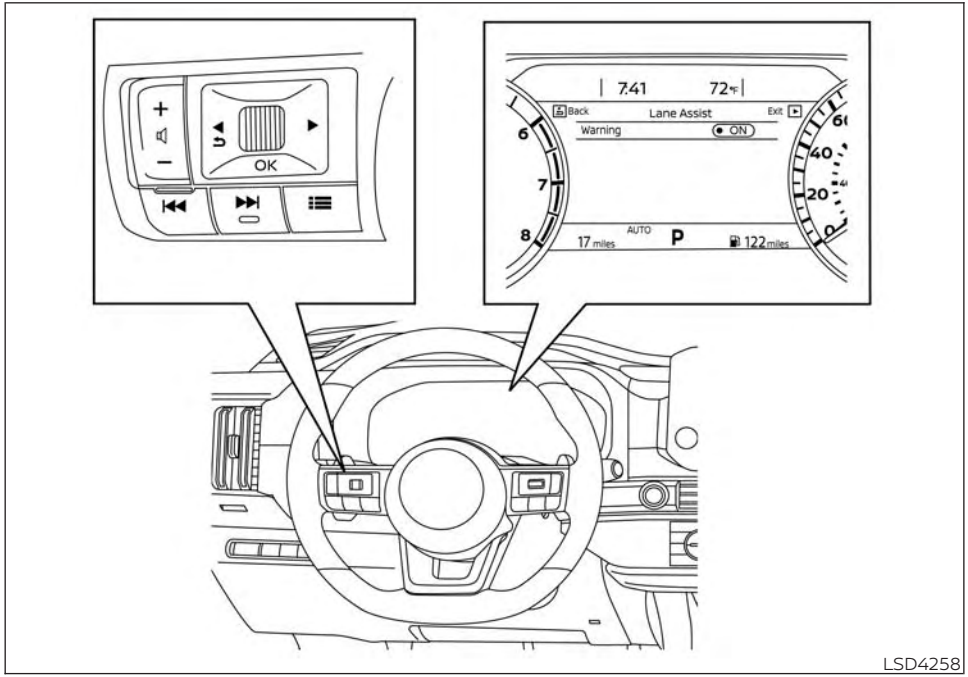

For vehicles with the 7 inch (18 cm) display

HOW TO ENABLE/DISABLE THE LDW SYSTEM

When the LDW system is enabled in the vehicle information display, the system can be turned off by pushing the warning systems switch (if so equipped). For additional information, see "Warning systems switch" (P. 2-96).

Perform the following steps to enable or disable the LDW system.

1. Press the ◀▶ button until "Settings" displays in the vehicle information display. Use the scroll dial to select "Driver Assistance." Then press the OK button.
2. Select "Lane Assist" or "Lane" and press the OK button.
3. Select "Warning" and press the OK button to turn the system on or off.

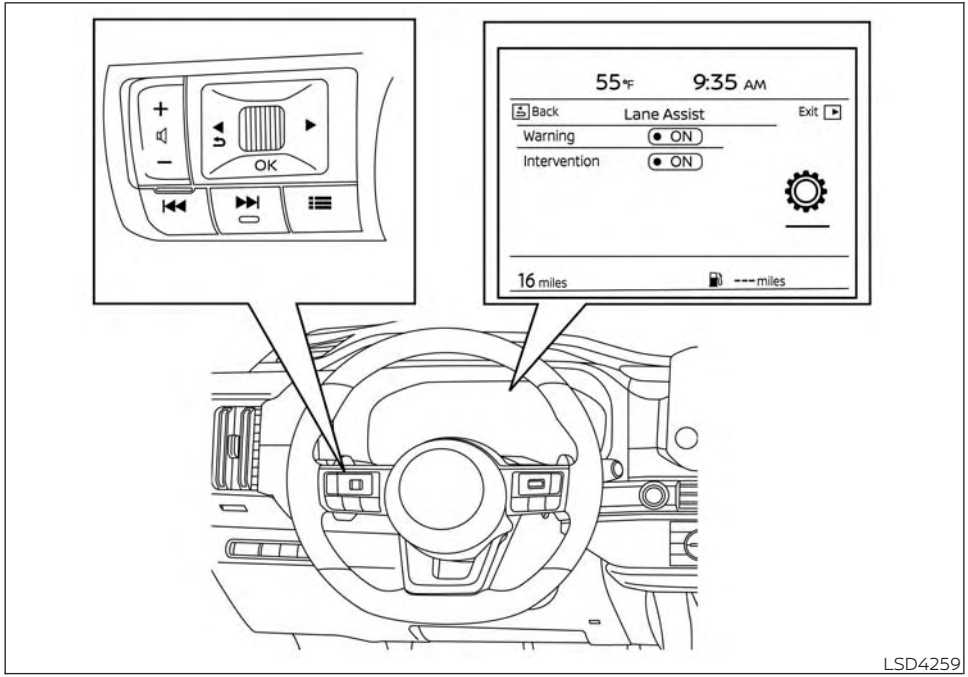

For vehicles with the 12.3 inch (31.2 cm) display

LDW SYSTEM LIMITATIONS

⚠WARNING

Listed below are the system limitations for the LDW system. Failure to follow the warnings and instructions for proper use of the LDW system could result in serious injury or death.

- **The system will not operate at speeds below approximately 60 km/h (37 mph) or if it cannot detect lane markers.**
- **Do not use the LDW system under the following conditions as it may not function properly:**
  - **During bad weather (rain, fog, snow, etc.).**
  - **When driving on slippery roads, such as on ice or snow.**
  - **When driving on winding or uneven roads.**
  - **When there is a lane closure due to road repairs.**
  - **When driving in a makeshift or temporary lane.**
  - **When driving on roads where the lane width is too narrow.**

- **When driving without normal tire conditions (for example, tire wear, low tire pressure, installation of spare tire, tire chains, nonstandard wheels).**
- **When the vehicle is equipped with non-original brake parts or suspension parts.**
- **When you are towing a trailer or other vehicle.**

· **The system may not function properly under the following conditions:**
- **On roads where there are multiple parallel lane markers; lane markers that are faded or not painted clearly; yellow painted lane markers; non-standard lane markers; or lane markers covered with water, dirt, snow, etc.**
- **On roads where the discontinued lane markers are still detectable.**
- **On roads where there are sharp curves.**
- **On roads where there are sharply contrasting objects, such as shadows, snow, water, wheel ruts, seams or lines remaining after road repairs. (The LDW system could detect these items as lane markers.)**
- **On roads where the traveling lane merges or separates.**
- **When the vehicle's traveling direction does not align with the lane marker.**
- **When traveling close to the vehicle in front of you, which obstructs the lane camera unit detection range.**
- **When rain, snow, dirt or an object adheres to the windshield in front of the lane camera unit.**
- **When the headlights are not bright due to dirt on the lens or if the aiming is not adjusted properly.**
- **When strong light enters the lane camera unit. (For example, the light directly shines on the front of the vehicle at sunrise or sunset.)**
- **When a sudden change in brightness occurs. (For example, when the vehicle enters or exits a tunnel or under a bridge.)**

SYSTEM TEMPORARILY UNAVAILABLE

If the vehicle is parked in direct sunlight under high temperature conditions (over approximately 40°C [104°F]) and then started, the LDW system may be deactivated automatically and the following message will appear in the vehicle information display: "Unavailable: High Cabin Temperature" or "Not available: High cabin temperature".

When the interior temperature is reduced, the LDW system will resume operating automatically.

The LDW system is not designed to warn under the following conditions:

- When you operate the lane change signal and change traveling lanes in the direction of the signal. (The LDW system will become operable again approximately 2 seconds after the lane change signal is turned off.)
- When the vehicle speed lowers to less than approximately 60 km/h (37 mph).

After the above conditions have finished and the necessary operating conditions are satisfied, the LDW functions will resume.

SYSTEM MALFUNCTION

If the LDW system malfunctions, it will cancel automatically and "Not Available System Malfunction" will appear in the vehicle information display. If "Not Available System Malfunction" appears in the vehicle information display, pull off the road to a safe location and stop the vehicle. Place the shift position in the P (Park) position and the ignition switch in the OFF position and restart the engine/motor. If "Not Available System Malfunction" continues to appear in the vehicle information display, have the system checked. It is recommended that you visit a NISSAN dealer for this service.

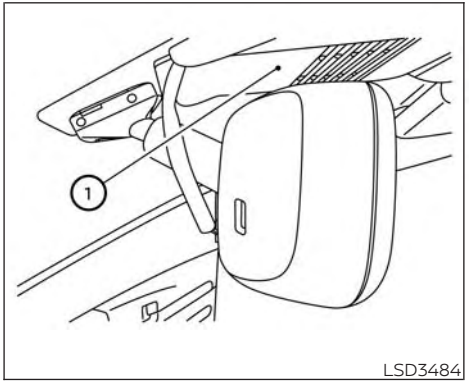

SYSTEM MAINTENANCE

The lane camera unit ① for the LDW system is located above the inside mirror. To keep the proper operation of the LDW system and prevent a system malfunction, be sure to observe the following:

- Always keep the windshield clean.
- Do not attach a sticker (including transparent material) or install an accessory near the camera unit.
- Do not place reflective materials, such as white paper or a mirror, on the instrument panel. The reflection of sunlight may adversely affect the camera unit's capability of detecting the lane markers.
- Do not strike or damage the areas around the camera unit. Do not touch the camera lens or remove the screw located on the camera unit. If the camera unit is damaged due to an accident, it is recommended that you visit a NISSAN dealer.

INTELLIGENT LANE INTERVENTION (if so equipped)

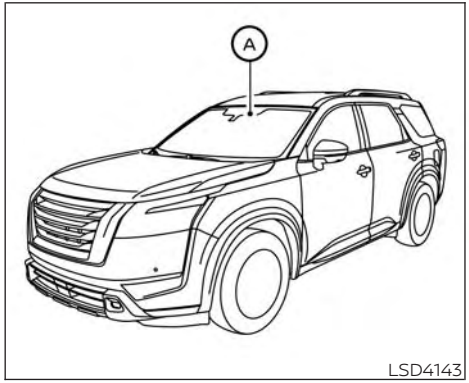

LSD4143

⚠ WARNING

Failure to follow the warnings and instructions for proper use of the Intelligent Lane Intervention system could result in serious injury or death.

- **The Intelligent Lane Intervention system will not steer the vehicle or prevent loss of control. It is the driver's responsibility to stay alert, drive safely, keep the vehicle in the traveling lane, and be in control of the vehicle at all times.**
- **The Intelligent Lane Intervention system is primarily intended for use on well-developed freeways or highways. It may not detect the lane markers in certain road, weather, or driving conditions.**

The Intelligent Lane Intervention system must be turned on with the ProPILOT Assist switch on the steering wheel, every time the ignition is placed in the ON position.

The Intelligent Lane Intervention system will operate when the vehicle is driven at speeds of approximately 60 km/h (37 mph) and above, and only when the lane markings are clearly visible on the road.

The Intelligent Lane Intervention system warns the driver when the vehicle has left the center of the traveling lane with an indicator and a steering wheel vibration. The system helps assist the driver to return the vehicle to the center of the traveling lane by applying the brakes to the left or right wheels individually (for a short period of time).

The Intelligent Lane Intervention system monitors the lane markers on the traveling lane using the camera unit Ⓐ located above the inside mirror.

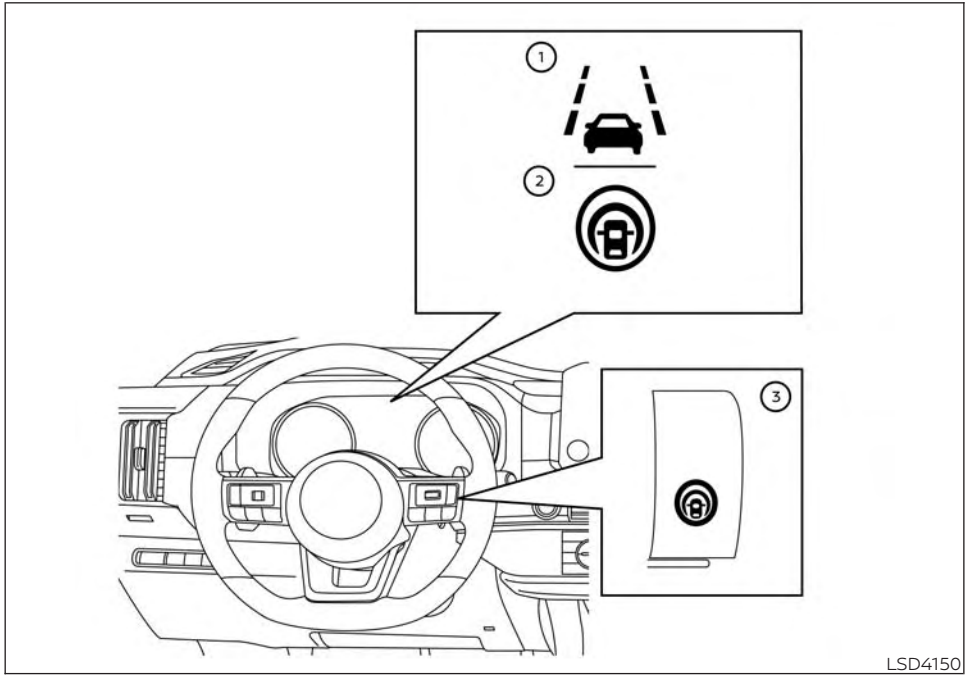

For vehicles with the 7 inch (18 cm) display

INTELLIGENT LANE INTERVENTION
SYSTEM OPERATION

① Lane Departure Warning (LDW) indicator

② Intelligent Lane Intervention indicator (if so equipped)

③ ProPILOT Assist switch

The Intelligent Lane Intervention system operates above approximately 60 km/h (37 mph). When the vehicle approaches either the left or the right side of the traveling lane, the steering wheel will vibrate and the LDW indicator (orange) on the instrument panel will blink to alert the driver. Then, the Intelligent Lane Intervention system will automatically apply the brakes for a short period of time to help assist the driver to return the vehicle to the center of the traveling lane.

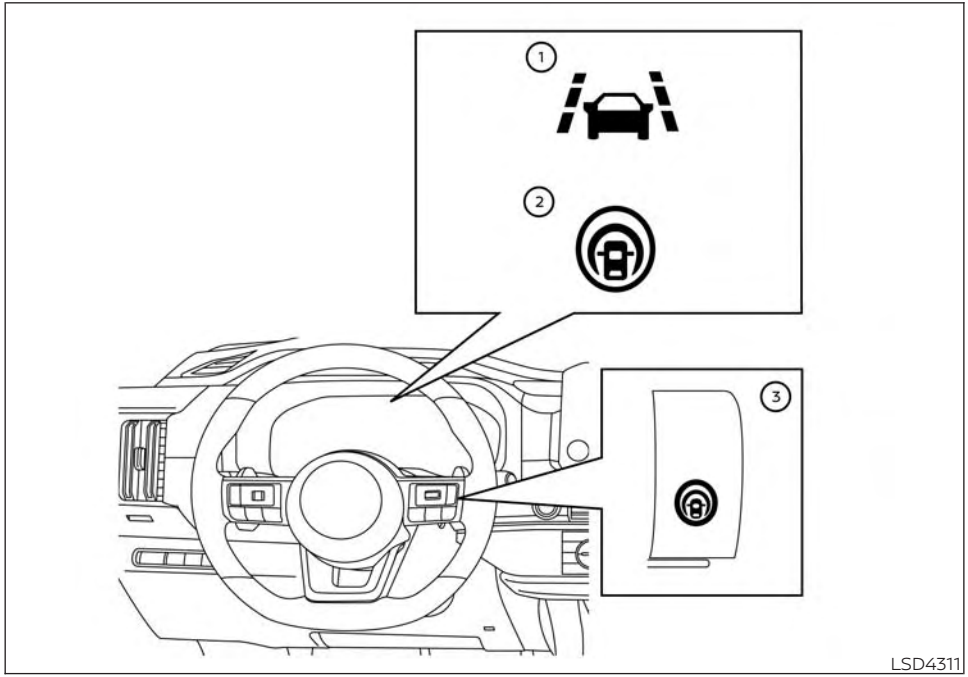

For vehicles with the 12.3 inch (31.2 cm) display

To turn on the Intelligent Lane Intervention system, push the ProPILOT Assist switch on the steering wheel after starting the engine/motor. The Intelligent Lane Intervention indicator on the instrument panel will illuminate. Push the ProPILOT Assist switch again to turn off the Intelligent Lane Intervention system. The Intelligent Lane Intervention indicator will turn off.

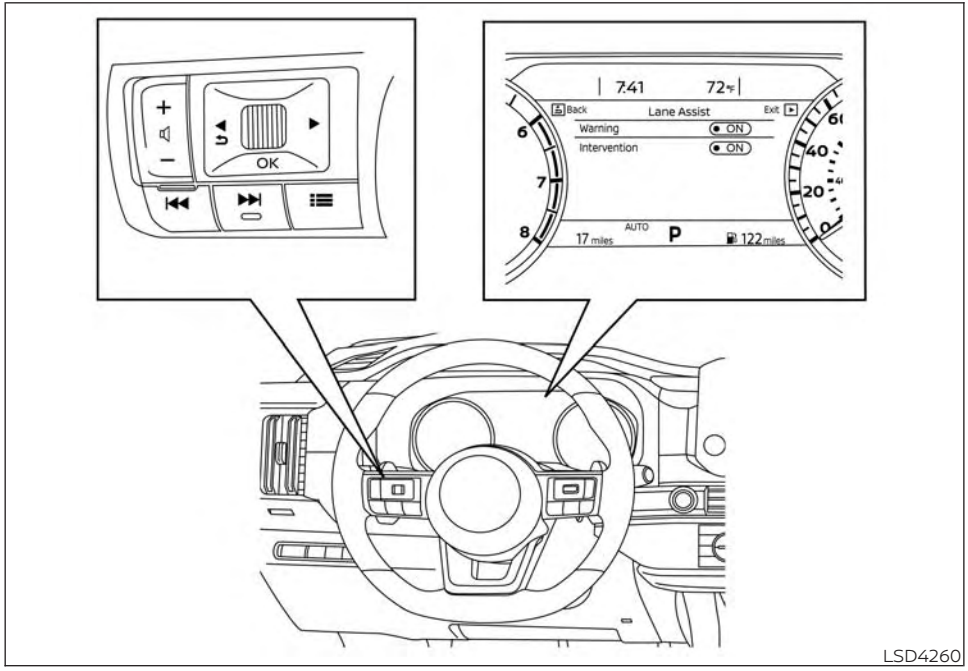

For vehicles with the 7 inch (18 cm) display

HOW TO ENABLE/DISABLE THE INTELLIGENT LANE INTERVENTION SYSTEM

Perform the following steps to enable or disable the Intelligent Lane Intervention system.

1. Press the ◀▶ button until "Settings" displays in the vehicle information display. Use the scroll dial to select "Driver Assistance". Then press the OK button.
2. Select "Lane Assist" or Lane" and press the OK button.
3. Select "Intervention" and press the OK button.
4. Push the ProPILOT Assist switch to turn the system on or off.

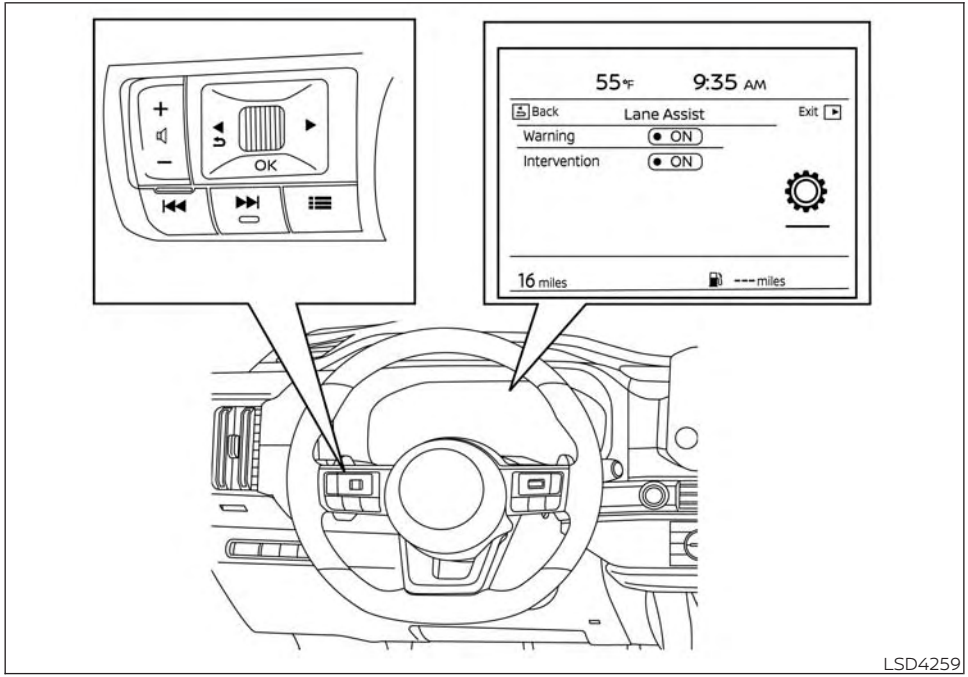

For vehicles with the 12.3 inch (31.2 cm) display

NOTE:

- **When Intelligent Lane Intervention is enabled in the settings menu, turning the ProPILOT Assist system on will activate the Intelligent Lane Intervention system at the same time. If Intelligent Lane Intervention is not enabled in the settings menu, Intelligent Lane Intervention will automatically activate when the ProPILOT Assist system is "SET." For additional information, see "Intelligent Lane Intervention" (P. 5-163).**
- **For models with the ProPILOT Assist system: When the Intelligent Lane Intervention (I-LI) system is enabled in the settings menu, the I-LI system can be turned on or off by pushing the speed limiter MAIN switch (if so equipped).**

INTELLIGENT LANE INTERVENTION SYSTEM LIMITATIONS

⚠ WARNING

Listed below are the system limitations for the Intelligent Lane Intervention system. Failure to follow the warnings and instructions for proper use of the Intelligent Lane Intervention system could result in serious injury or death.

- **The Intelligent Lane Intervention system may activate if you change lanes without first activating your turn signal or, for example, if a construction zone directs traffic to cross an existing lane marker. If this occurs you may need to apply corrective steering to complete your lane change.**
- **Because the Intelligent Lane Intervention may not activate under the road, weather, and lane marker conditions described in this section, it may not activate every time your vehicle begins to leave its lane and you will need to apply corrective steering.**
- **When the Intelligent Lane Intervention system is operating, avoid excessive or sudden steering maneuvers. Otherwise, you could lose control of the vehicle.**
- **The Intelligent Lane Intervention system will not operate at speeds below approximately 60 km/h (37 mph) or if it cannot detect lane markers.**
- **Do not use the Intelligent Lane Intervention system under the following conditions as it may not function properly:**
  - **During bad weather (rain, fog, snow, etc.).**
  - **When driving on slippery roads, such as on ice or snow.**
  - **When driving on winding or uneven roads.**
  - **When there is a lane closure due to road repairs.**
  - **When driving in a makeshift or temporary lane.**
  - **When driving on roads where the lane width is too narrow.**
  - **When driving without normal tire conditions (for example, tire wear, low tire pressure, installation of spare tire, tire chains, non-standard wheels).**
  - **When the vehicle is equipped with nonoriginal brake parts or suspension parts.**
  - **When you are towing a trailer or other vehicle.**
  - **On roads where there are multiple parallel lane markers; lane markers that are faded or not painted clearly; yellow painted lane markers; non-standard lane markers; or lane markers covered with water, dirt, snow, etc.**
  - **On roads where discontinued lane markers are still detectable.**
  - **On roads where there are sharp curves.**
  - **On roads where there are sharply contrasting objects, such as shadows, snow, water, wheel ruts, seams or lines remaining after road repairs. (The Intelligent Lane Intervention system could detect these items as lane markers.)**
  - **On roads where the traveling lane merges or separates.**
  - **When the vehicle's traveling direction does not align with the lane marker.**

- **When traveling close to the vehicle in front of you, which obstructs the lane camera unit detection range.**
- **When rain, snow or dirt adheres to the windshield in front of the lane camera unit.**
- **When the headlights are not bright due to dirt on the lens or if the aiming is not adjusted properly.**
- **When strong light enters the lane camera unit. (For example, the light directly shines on the front of the vehicle at sunrise or sunset.)**
- **When a sudden change in brightness occurs. (For example, when the vehicle enters or exits a tunnel or under a bridge.)**

While the Intelligent Lane Intervention system is operating, you may hear a sound of brake operation. This is normal and indicates that the Intelligent Lane Intervention system is operating properly.

SYSTEM TEMPORARILY UNAVAILABLE

Condition A:

The warning and assist functions of the Intelligent Lane Intervention system are not designed to work under the following conditions:

- When you operate the lane change signal and change the traveling lanes in the direction of the signal. (The Intelligent Lane Intervention system will be deactivated for approximately 2 seconds after the lane change signal is turned off.)
- When the vehicle speed lowers to less than approximately 60 km/h (37 mph).

After the above conditions have finished and the necessary operating conditions are satisfied, the warning and assist functions will resume.

Condition B:

The assist function of the Intelligent Lane Intervention system is not designed to work under the following conditions (warning is still functional):

- When the brake pedal is depressed.
- When the steering wheel is turned as far as necessary for the vehicle to change lanes.
- When the vehicle is accelerated during Intelligent Lane Intervention system operation.
- When the Intelligent Cruise Control (ICC) approach warning occurs.
- When the hazard warning flashers are operated.
- When driving on a curve at high speed.

After the above conditions have finished and the necessary operating conditions are satisfied, the Intelligent Lane Intervention system application of the brakes will resume.

Condition C:

If the following messages appear in the vehicle information display, a chime will sound and the Intelligent Lane Intervention system will be turned off automatically.

- "Not Available Poor Road Conditions": When the VDC or ESP system (except Traction Control System [TCS] function) or ABS operates.
- "Currently not available": When the VDC or ESP system is turned off.

Action to take:

When the above conditions no longer exist, turn off the Intelligent Lane Intervention system. Push the ProPILOT Assist switch (for vehicles with ProPILOT Assist) on the

steering wheel again to turn the Intelligent Lane Intervention system back on.

Temporary disabled status at high temperature:

If the vehicle is parked in direct sunlight under high temperature conditions (over approximately 40°C [104°F]) and then the Intelligent Lane Intervention system is turned on, the Intelligent Lane Intervention system may be deactivated automatically and the following message will appear on the vehicle information display: "Unavailable: High Cabin Temperature" or "Not available High cabin temperature".

SYSTEM MALFUNCTION

If the Intelligent Lane Intervention system malfunctions, it will cancel automatically. The LDW indicator (orange) will illuminate in the display, a chime will sound and a warning message will appear in the vehicle information display. If the LDW indicator (orange) illuminates in the display, pull off the road to a safe location and stop the vehicle. Turn the engine/motor off and restart the engine/motor. If the LDW indicator (orange) continues to illuminate, have the Intelligent Lane Intervention system checked. It is recommended that you visit a NISSAN dealer for this service.

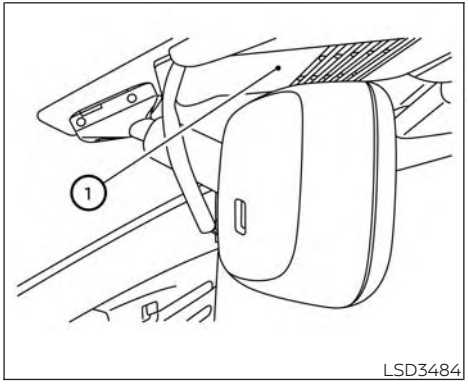

SYSTEM MAINTENANCE

The lane camera unit ① for the Intelligent Lane Intervention system is located above the inside mirror. To keep the proper operation of the Intelligent Lane Intervention system and prevent a system malfunction, be sure to observe the following:

- Always keep the windshield clean.
- Do not attach a sticker (including transparent material) or install an accessory near the camera unit.
- Do not place reflective materials, such as white paper or a mirror, on the instrument panel. The reflection of sunlight may adversely affect the camera unit's capability of detecting the lane markers.
- Do not strike or damage the areas around the camera unit. Do not touch the camera lens or remove the screw located on the camera unit. If the camera unit is damaged due to an accident, it is recommended that you visit a NISSAN dealer.

EMERGENCY LANE ASSIST SYSTEM (if so equipped)

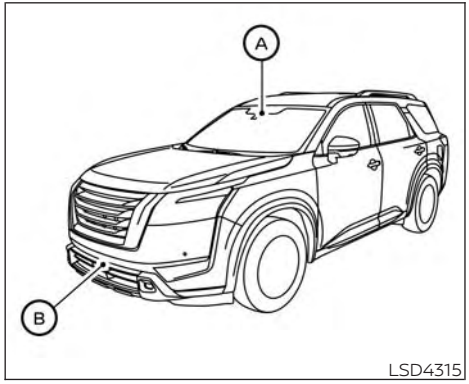

LSD4315

⚠ WARNING

Failure to follow the warnings and instructions for proper use of the Emergency Lane Assist system could result in serious injury or death.

- **The Emergency Lane Assist system will not steer the vehicle or prevent loss of control. It is the driver's responsibility to stay alert, drive safely, keep the vehicle in the traveling lane, and be in control of the vehicle at all times.**

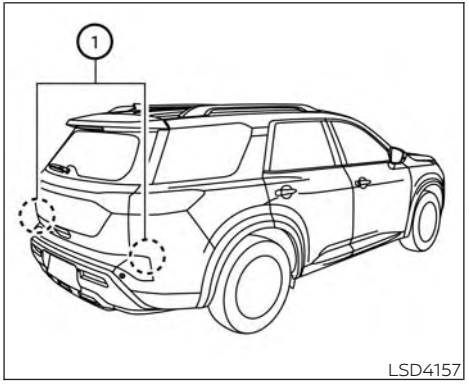

LSD4157

⚠ WARNING

- **The Emergency Lane Assist system is intended to work on all roads with well defined markings or road edges, but it may not detect the road edge or lane markers in certain road, weather or driving conditions.**
- **There is a limitation to the detection capability of the radars and camera. Not every moving object or vehicle will be detected. Always rely on your own operation to avoid accidents.**

The Emergency Lane Assist system will be automatically turned on each time the engine is restarted.

The sensitivity of the Emergency Lane Assist system, can be adjusted and this setting is kept until changed again by the driver.

The Emergency Lane Assist uses a multi-sensing camera Ⓐ located above the inside mirror to monitor the lane markers on the travelling lane and to detect other vehicles. The Emergency Lane Assist system also uses radar sensors Ⓑ located at the front of the vehicle and ① located near the rear bumpers to detect other vehicles.

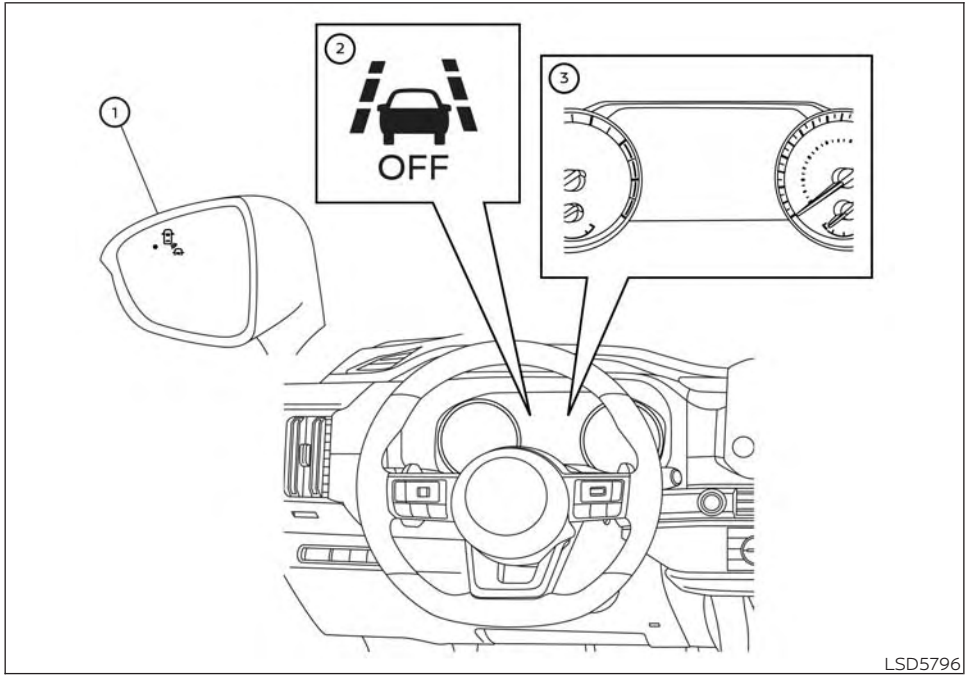

For vehicles with the 7 inch (18 cm) display

EMERGENCY LANE ASSIST SYSTEM
OPERATION

① Side indicator light

② Emergency Lane Assist indicator (in the vehicle information display)

③ Vehicle information display

The Emergency Lane Assist system will operate when the vehicle is driven at approximately 60 km/h (37 mph) and above, and only when the lane markings or road edge are clearly visible on the road.

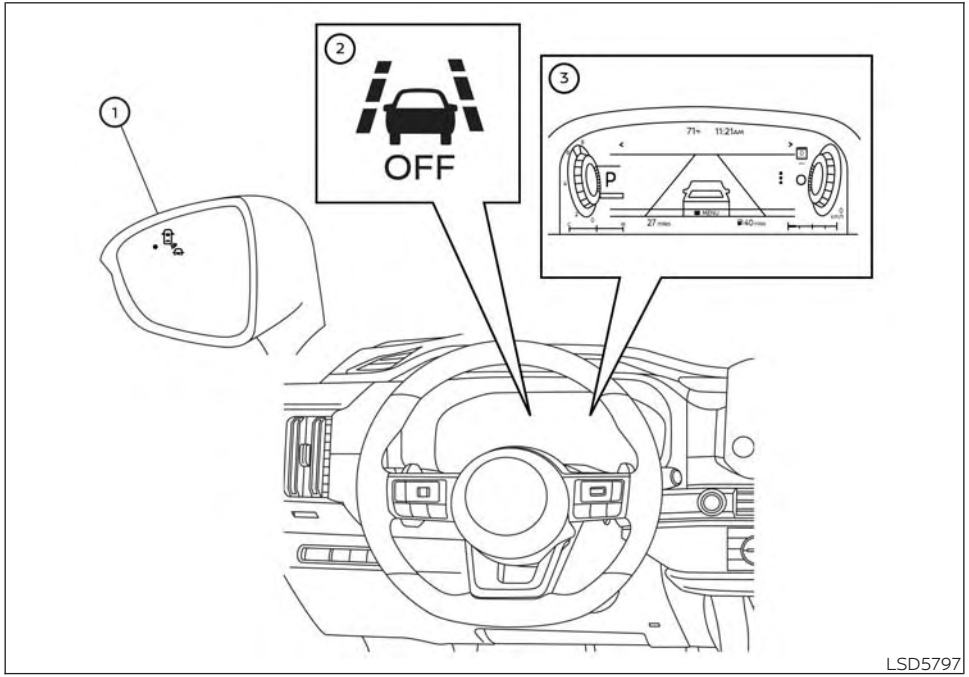

For vehicles with the 12.3 inch (31.2 cm) display

The Emergency Lane Assist system warns the driver when the vehicle approaches the road edge or solid white line with an indicator in the vehicle information display and steering wheel vibration. The system helps assist the driver to return the vehicle to the carriageway by applying the brakes to the left or right wheels individually (for a short period of time) in the following circumstances:

- The vehicle is approaching the edge of the road, towards grass or gravel or a curb, for example.
- The vehicle is approaching a solid line on a single lane marking.
- Oncoming vehicles in adjacent lanes.
- Overtaking vehicles in adjacent lanes. The side indicator light will also flash.
- Intelligent Lane intervention can be turned on to provide assistance in lanes on motorway/ dual carriageways.

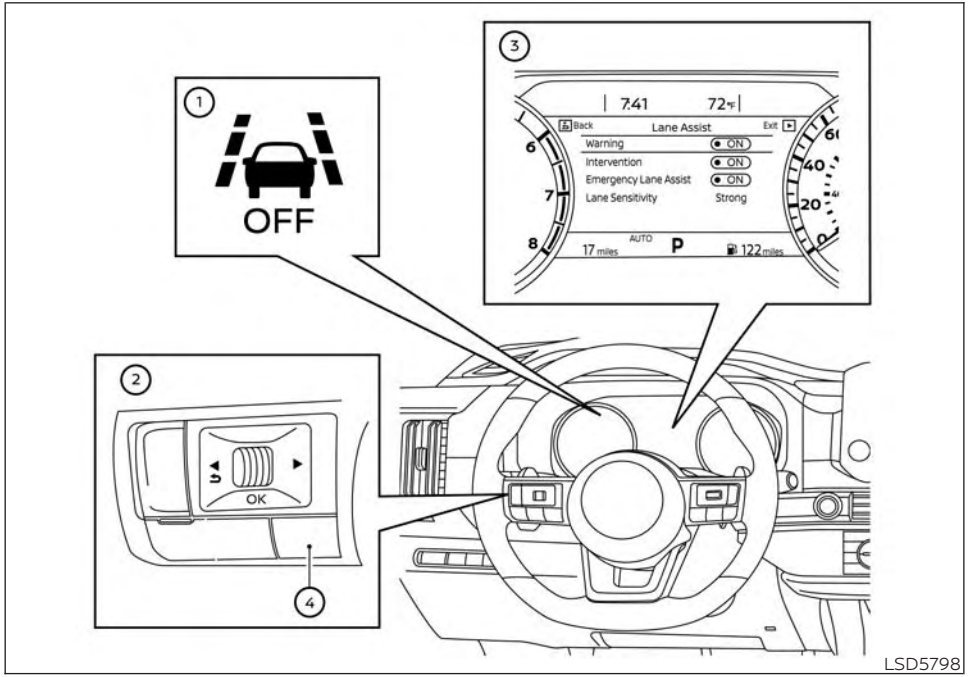

For vehicles with the 7 inch (18 cm) display

HOW TO ENABLE/DISABLE THE EMERGENCY LANE ASSIST SYSTEM

① ELA system OFF indicator

② Steering wheel mounted countrols (left side)

③ Vehicle information display

④ Shortcut button

1. Press the short cut button ④ on the steering wheel switch.
2. Press the OK button to turn the ELA system on or off.

Or

1. Press the ◀▶ button until "Settings" appears in the vehicle information display and then press the OK button. Use the scroll dial to select "Driver Assistance" then press the OK button.
2. Select "Lane" or "Lane Assist" and press the OK button.
3. Select "Emergency Lane" and press the OK button to turn the system on or off.

When the ELA system is turned off, the ELA system OFF warning light illuminates.

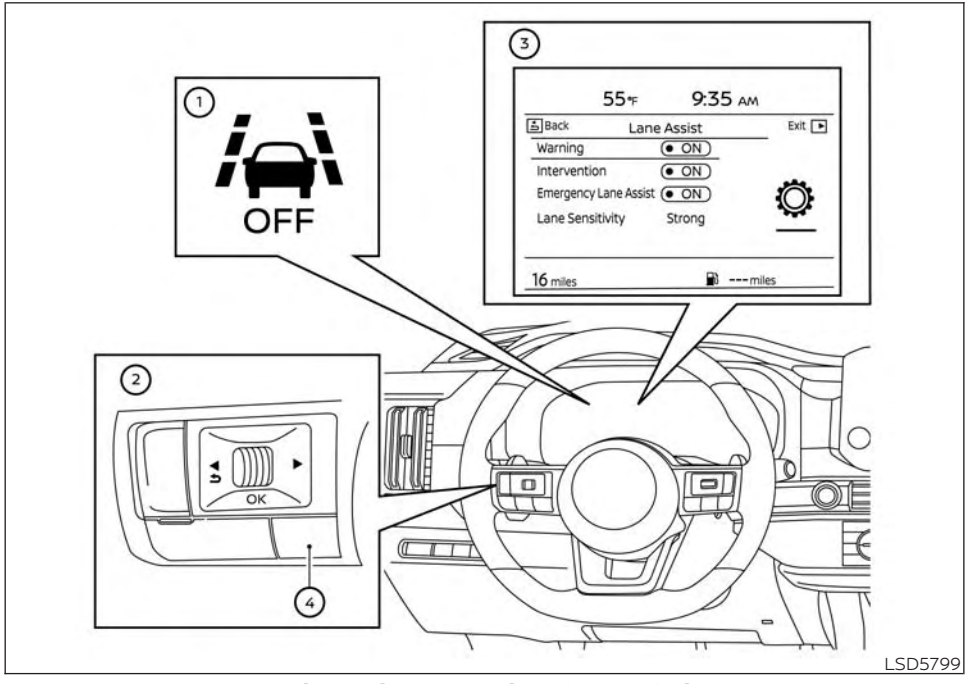

For vehicles with the 12.3 inch (31.2 cm) display

For additional information, see "Vehicle information display 7 inch (18 cm) Type A" (P. 2-24) or "Vehicle information display 12.3 inch (31 cm) Type B" (P. 2-49).

NOTE:

- **The Emergency Lane Assist system will be automatically turned on each time the engine is restarted.**
- **Intelligent Lane Intervention is an additional aid that can be turned on in addition to ELA if required. For additional information, see "Vehicle information display 7 inch (18 cm) Type A" (P. 2-24) or "Vehicle information display 12.3 inch (31 cm) Type B" (P. 2-49).**

Setting lane sensitivity

You can set lane sensitivity using the "Settings" menu in the vehicle information display.

For additional information, see "Vehicle information display 7 inch (18 cm) Type A" (P. 2-24) or "Vehicle information display 12.3 inch (31 cm) Type B" (P. 2-49).

1. Press the ◀▶ button until "Settings" appears in the vehicle information display and then press the OK button. Using the scroll dial, select "Driver Assistance" and press the OK button.

2. Select "Lane" or "Lane Assist" and press the OK button.
3. Select "Lane Sensitivity" and choose between the following options:
   - Strong
   - Normal
   - Mild

EMERGENCY LANE ASSIST SYSTEM LIMITATIONS

⚠ WARNING

Listed below are the system limitations for the Emergency Lane Assist system. Failure to operate the vehicle in accordance with these system limitations could result in serious injury or death.

- **The Emergency Lane Assist system may activate if you cross a solid lane marker without first activating your turn signal or, for example, if a construction zone directs traffic to cross an existing lane marker. If this occurs you may need to apply corrective steering to complete your lane change.**
- **Because the Emergency Lane Assist may not activate under the road, weather and lane marker conditions described in this section, it may not activate every time your vehicle begins to leave the travelling lane and you will need to apply corrective steering.**
- **The Emergency Lane Assist system will not operate at speeds below the following speeds, or if it cannot detect lane markers.**
- **Below approximately 60 km/h (37 mph).**
- **When the Emergency Lane Assist system detects oncoming vehicles in adjacent lanes, the Emergency Lane Assist system will not operate at speeds above approximately 120 km/h (74 mph).**
- **Do not use the Emergency Lane Assist system under the following conditions, there could be serious effect on vehicle safety with risk of an accident and injury or death.**
  - **When driving without normal tire conditions (for example, tire wear, low tire pressure, installation of spare tire, tire chains, non-standard wheels). For additional information, see "Wheels and tires" (P. 8-35) .**
  - **When the vehicle is equipped with non-original brake parts or suspension parts.**
  - **When towing a trailer or another vehicle.**
- **The Emergency Lane Assist system may not function properly in the following conditions:**
  - **During bad weather (rain, fog, snow, etc.).**
  - **When driving on slippery roads, such as on ice or snow.**
  - **When driving on winding or uneven roads.**
  - **When there is a lane closure due to road repairs.**
  - **When driving in a makeshift or temporary lane.**
  - **When driving on roads where the lane width is too narrow.**
  - **On roads where there are multiple parallel lane markers; lane markers that are faded or not painted clearly; yellow painted lane markers; non-standard lane markers; or lane markers covered with water, dirt, snow, etc.**

- On roads where the edge of the road is not clearly visible.
- On roads where discontinued lane markers are still detectable.
- On roads where there are sharp curves.
- On roads where there are sharply contrasting objects, such as shadows, snow, water, wheel ruts, seams or lines remaining after road repairs. (The Emergency Lane Assist system could detect these items as lane markers.)
- On roads where the traveling lane merges or separates.
- When the vehicle's traveling direction does not align with the lane marker.
- When traveling close to the vehicle in front of you, which obstructs the lane camera unit detection range.
- When rain, snow or dirt adheres to the windshield in front of the lane camera unit.
- When the headlights are not bright due to dirt on the lens or if the aiming is not adjusted properly.
- When strong light enters the lane camera unit. (For example, the light directly shines on the front of the vehicle at sunrise or sunset.)
- When a sudden change in brightness occurs. (For example, when the vehicle enters or exits a tunnel or under a bridge.)

Listed below are the system limitations for the overtaking detection feature of the Emergency Lane Assist system. Failure to operate the vehicle in accordance with these system limitations could result in serious injury or death.

- The Emergency Lane Assist system cannot detect all overtaking vehicles under all conditions.
- The radar sensors may not be able to detect and activate Emergency Lane Assist when certain objects are present such as:
  - Pedestrians, bicycles, animals.
  - Vehicles such as motorcycles, low height vehicles, or vehicles with high ground clearance.
  - Vehicles remaining in the detection zone when you accelerate from a stop.
  - A vehicle merging into an adjacent lane at a speed approximately the same as your vehicle.
  - A vehicle approaching rapidly from behind.
  - A vehicle which your vehicle overtakes rapidly.
  - A vehicle that passes through the detection zone quickly.
- The radar sensor's detection zone is designed based on a standard lane width. When driving in a wider lane, the radar sensors may not detect vehicles in an adjacent lane .When driving in a narrow lane, the radar sensors may detect vehicles driving two lanes away.
- The radar sensors are designed to ignore most stationary objects, however objects such as guardrails, walls, foliage and parked vehicles may occasionally be detected. This is a normal operation condition.
- The following conditions may reduce the ability of the radar to detect other vehicles:
  - Severe weather
  - Road spray
  - Ice/frost/dirt build-up on the vehicle

- **Do not attach stickers (including transparent material), install accessories or apply additional paint near the radar sensors. These conditions may reduce the ability of the radar to detect other vehicles.**

Listed below are the system limitations for the Oncoming detection feature of the Emergency Lane Assist system. Failure to operate the vehicle in accordance with these system limitations could result in serious injury or death.

- **The Emergency Lane Assist system cannot detect all oncoming vehicles under all conditions.**
- **The following are not detected as oncoming vehicles:**
  - **Pedestrians, bicycles, animals.**
  - **Vehicles such as motorcycles, low height vehicles, or vehicles with high ground clearance.**
  - **Parked vehicles or low speed vehicles.**
  - **Oncoming vehicles on same lane.**
- **The Emergency Lane Assist system may not function properly or detect an oncoming vehicle in the following conditions:**
  - **In poor visibility conditions (such as rain, snow, fog, dust storms, sand storms, smoke and road spray from other vehicles).**
  - **If dirt, ice, snow, fog or other material is covering the radar sensor area or camera area of the windscreen.**
  - **If strong light (for example, sunlight or high beams) enters the front camera or a sudden change in brightness occurs (for example, entering a tunnel or driving in lightning).**
  - **In dark or dimly lit conditions, such as at night or in tunnels, including cases where your vehicle's headlights are off or dim, or the tail lights of the vehicle ahead are off.**
  - **When the direction of the camera is misaligned.**
  - **When driving on a steep downhill slope, on roads with sharp curves, and/or bumpy or dirt roads.**
  - **If there is interference from other radar sources.**
  - **When your vehicle's position or movement is changed quickly or significantly (for example, lane change, turning vehicle, abrupt steering, sudden acceleration or deceleration).**
  - **If the vehicle ahead has a unique or unusual shape, extremely low or high clearance heights, or unusual cargo loading or is narrow (for example, a motorcycle).**

NOTE:

While the Emergency Lane Assist system is operating, you may hear a sound of brake operation. This is normal and indicates that the Emergency Lane Assist system is operating properly.

SYSTEM TEMPORARILY UNAVAILABLE

Condition A:

The warning and assist functions of the Emergency Lane Assist system are not designed to work under the following conditions:

- When you operate the lane change signal and change the travelling lanes in the direction of the signal. (The Emergency Lane Assist system will be deactivated for approximately 2 seconds after the lane change signal is turned off). This does not apply if an overtaking vehicle is detected.
- When the vehicle speed lowers to less than approximately 60 km/h (37 mph).
- When an oncoming vehicle is detected and the vehicle speed is over approximately 120 km/h (74 mph)

After the above conditions have finished and the necessary operating conditions are satisfied, the warning and assist functions will resume.

Condition B:

The assist function of the Emergency Lane Assist system is not designed to work under the following conditions (warning is still functional):

- When the brake pedal is depressed.
- When the steering wheel is turned as far as necessary for the vehicle to change lanes.
- When the vehicle is accelerated during the Emergency Lane Assist system operation.
- When the Intelligent Cruise Control (ICC) approach warning occurs (if so equipped).
- When the hazard warning flashers are operated.
- When driving on a curve at high speed.

After the above conditions have finished and the necessary operating conditions are satisfied, the Emergency Lane Assist system application of the brakes will resume.

Condition C:

If the VDC/ESP system is turned OFF, the Emergency Lane Assist system OFF warning light illuminates and the Emergency Lane Assist system will be turned off automatically.

When the VDC/ESP system turns ON again and the necessary operating conditions are satisfied, the Emergency Lane Assist system application of the brakes will resume.

Condition D:

If one of the following messages appears in the vehicle information display and the Emergency Lane Assist system warning light blinks in the vehicle information display, the Emergency Lane Assist system will be turned off automatically:

- "Not available Side radar obstructed": When the rear radar is blocked. Always keep the area near the radar sensors clean.
- "Temporarily Disabled Front Radar Blocked": When the front radar is blocked. Always keep the area near the radar sensors clean.
- "Not Available Front Camera Obstructed": When the front camera is blocked. Always keep the area near the front camera clean.
- If the vehicle is parked in direct sunlight under high temperature conditions (over approximately 40°C (104°F)) and then the Emergency Lane Assist system is turned on, the Emergency Lane Assist system may be deactivated automatically and the Emergency Lane Assist system warning light blinks.

SYSTEM MALFUNCTION

If the Emergency Lane Assist system malfunctions, it will cancel automatically. The Emergency Lane Assist indicator (orange) will illuminate, the "System Fault" message will appear in the vehicle information display and a chime will sound. If the "System Fault" message appears in the vehicle information display pull off the road in a safe location, turn off and restart the engine. If the "System Fault" message continues to appear in the vehicle information display, have the Emergency Lane Assist system checked by a NISSAN dealer or qualified workshop.

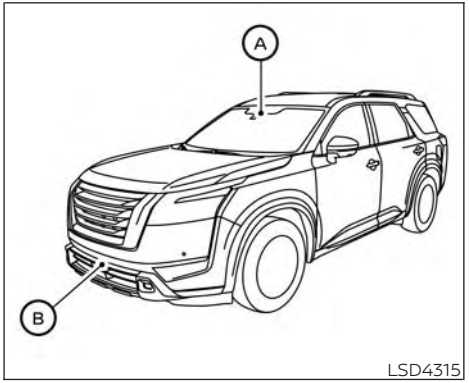

LSD4315

SYSTEM MAINTENANCE

The front radar sensor Ⓑ is located on the front of the vehicle. The camera Ⓐ is located on the upper side of the windscreen. To keep the Emergency Lane Assist system operating properly, be sure to observe the following:

- Always keep the sensor area on the front of the vehicle and windscreen clean.
- Do not strike or damage the areas around the sensors (bumper, windscreen).

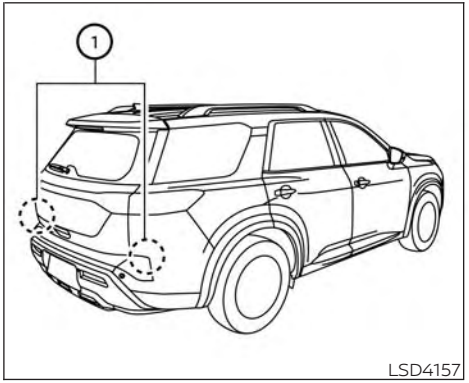

LSD4157

- Do not cover or attach stickers or similar objects on the front of the vehicle near the sensor area. This could cause failure or malfunction.
- Do not attach metallic objects near the radar sensor area (brush guard, etc.). This could cause failure or malfunction.
- Do not place reflective materials, such as white paper or a mirror, on the instrument panel. The reflection of sunlight may adversely affect the camera unit's detection capability.

- Do not alter, remove or paint the front of the vehicle near the sensor area. Before customising or restoring the sensor area, it is recommended that you visit a NISSAN dealer or qualified workshop.

The two rear radar sensors ① for the Emergency Lane Assist system are located near the rear bumper. Always keep the area near the radar sensors clean.

The radar sensors may be blocked by temporary ambient conditions such as splashing water, mist or fog. The blocked condition may also be caused by objects such as ice, frost or dirt obstructing the radar sensors.

Check for and remove objects obstructing the area around the radar sensors.

Do not attach stickers (including transparent material), install accessories or apply additional paint near the radar sensors.

Do not strike or damage the area around the radar sensors.

It is recommended you visit a NISSAN dealer or qualified workshop if the area around the radar sensors is damaged due to a collision.

⚠WARNING

Failure to follow the warnings and instructions for proper use of the BSW system could result in serious injury or death.

- **The BSW system is not a replacement for proper driving procedures and is not designed to prevent contact with vehicles or objects. When changing lanes, always use the side and rear mirrors and turn and look in the direction your vehicle will move to ensure it is safe to change lanes. Never rely solely on the BSW system.**

The BSW system helps alert the driver of other vehicles in adjacent lanes when changing lanes.

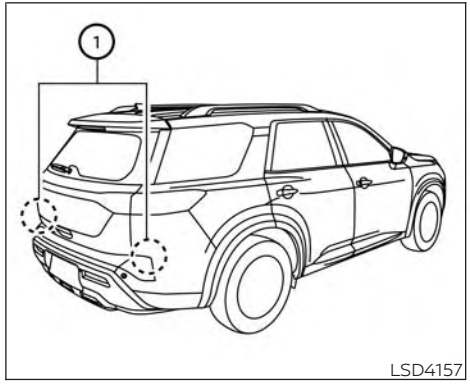

The BSW system uses radar sensors ① installed near the rear bumper to detect other vehicles in an adjacent lane.

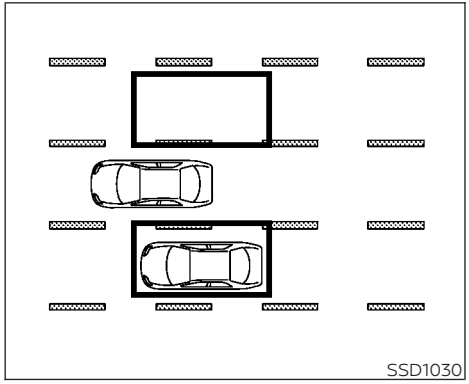

Detection zone

The radar sensors can detect vehicles on either side of your vehicle within the detection zone shown as illustrated. This detection zone starts from the outside mirror of your vehicle and extends approximately 3.0 m (10 ft) behind the rear bumper, and approximately 3.0 m (10 ft) sideways.

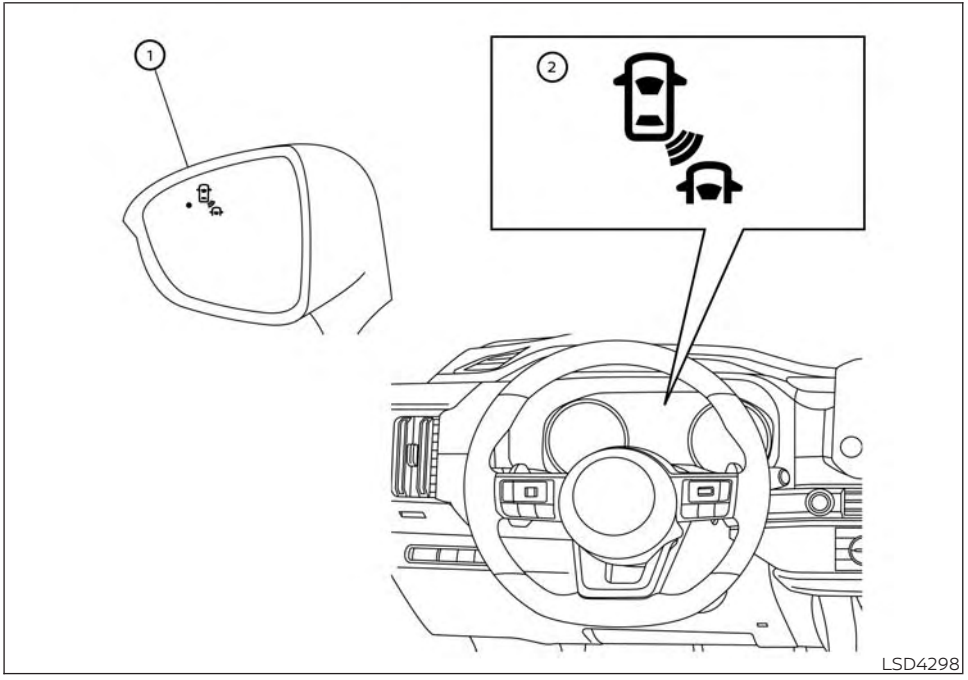

For vehicles with the 7 inch (18 cm) display

BSW SYSTEM OPERATION

① Side BSW/RCTA Indicator Light

② BSW Indicator

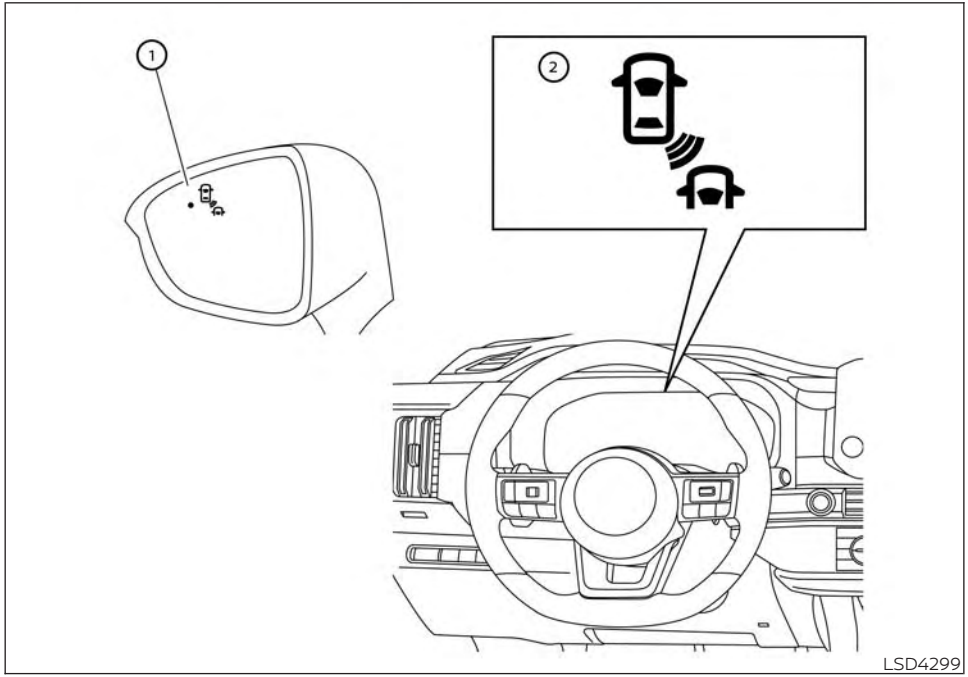

For vehicles with the 12.3 inch (31.2 cm) display

The BSW system operates above approximately 32 km/h (20 mph).

If the radar sensors detect a vehicle in the detection zone, the side BSW/RCTA indicator light (1) illuminates. If the turn signal is then activated, the system chimes (twice) and the side BSW/RCTA indicator light flashes. The side BSW/RCTA indicator light continues to flash until the detected vehicles leaves the detection zone.

The side BSW/RCTA indicator light illuminates for a few seconds when the ignition switch is placed in the ON position.

The brightness of the side BSW/RCTA indicator light is adjusted automatically depending on the brightness of the ambient light.

If a vehicle comes into the detection zone after the driver activates the turn signal, then only the side BSW/RCTA indicator light flashes and no chime sounds. For additional information, see "BSW driving situations" (P. 5-69).

The BSW system automatically turns on every time the engine is started, as long as it is activated using the settings menu on the vehicle information display.

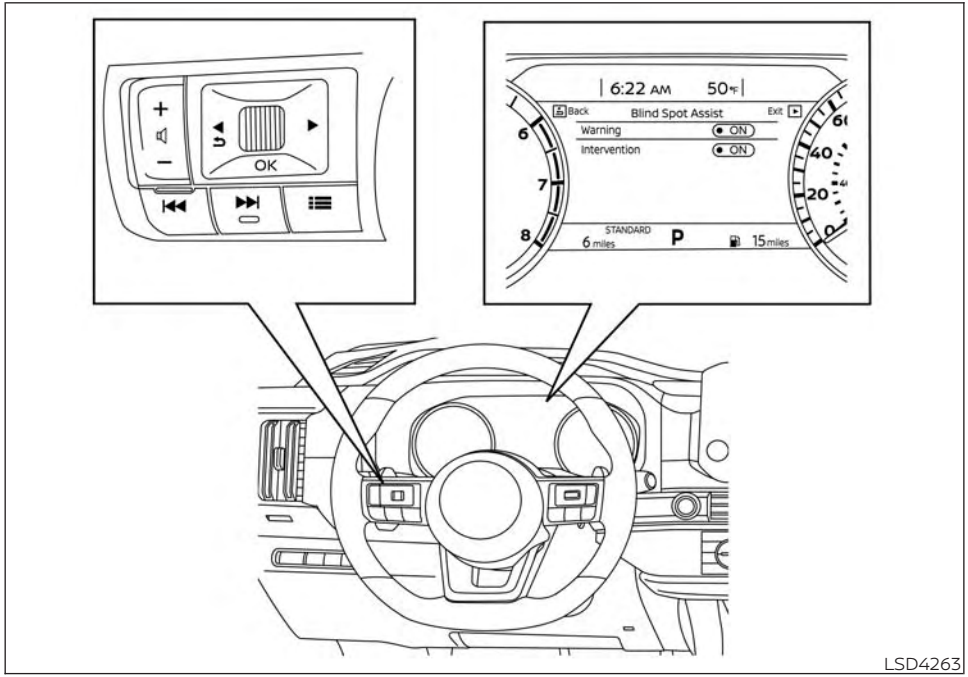

For vehicles with the 7 inch (18 cm) display

HOW TO ENABLE/DISABLE THE BSW SYSTEM

When the BSW system is enabled in the vehicle information display, the system can be turned off by pushing the warning systems switch (if so equipped). For additional information, see "Warning systems switch" (P. 2-96).

Perform the following steps to enable or disable the BSW system.

1. Press the ◀▶ button until "Settings" displays in the vehicle information display. Use the scroll dial to select "Driver Assistance." Then press the OK button.
2. Select "Blind Spot Assist" or "Blind Spot" and press the OK button.
3. Select "Warning" and press the OK button to turn the system on or off.

NOTE:

- **When enabling/disabling the system, the system will retain current settings even if the engine is restarted.**

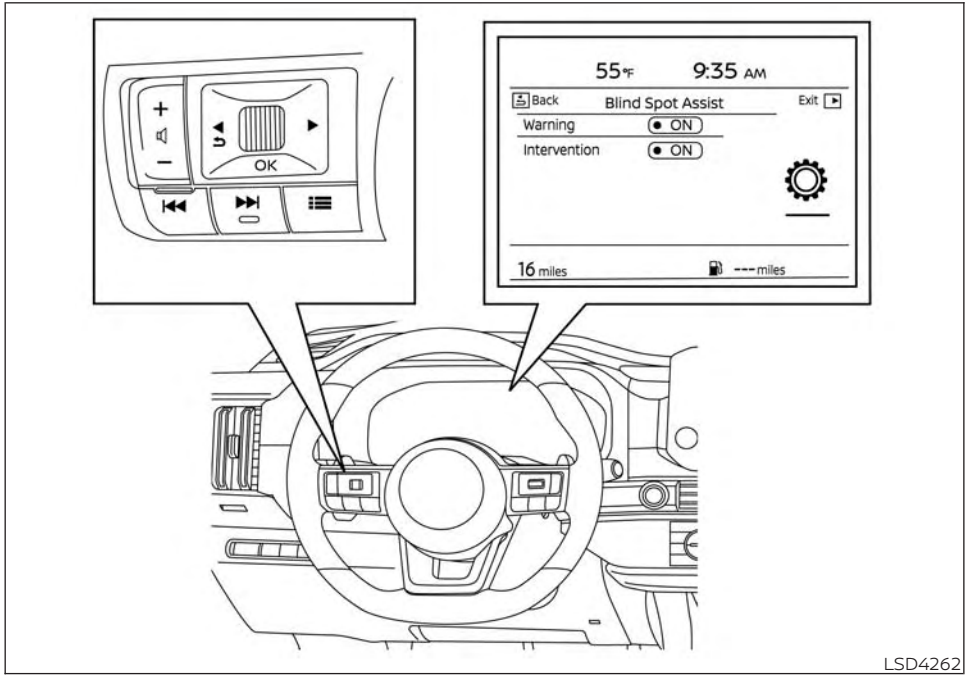

For vehicles with the 12.3 inch (31.2 cm) display

BSW SYSTEM LIMITATIONS

⚠WARNING

Listed below are the system limitations for the BSW system. Failure to operate the vehicle in accordance with these system limitations could result in serious injury or death.

- **The BSW system cannot detect all vehicles under all conditions.**
- **The radar sensors may not be able to detect and activate BSW when certain objects are present such as:**
  - **Pedestrian, bicycles, animals.**
  - **Vehicles such as motorcycles, low height vehicles, or high ground clearance vehicles.**
  - **Oncoming vehicles.**
  - **Vehicles remaining in the detection zone when you accelerate from a stop.**
  - **A vehicle merging into an adjacent lane at a speed approximately the same as your vehicle.**
  - **A vehicle approaching rapidly from behind.**

- A vehicle which your vehicle overtakes rapidly.
- A vehicle that passes through the detection zone quickly.
- When overtaking several vehicles in a row, the vehicles after the first vehicle may not be detected if they are traveling close together.

· The radar sensors' detection zone is designed based on a standard lane width. When driving in a wider lane, the radar sensors may not detect vehicles in an adjacent lane. When driving in a narrow lane, the radar sensors may detect vehicles driving two lanes away.

· The radar sensors are designed to ignore most stationary objects; however, objects such as guardrails, walls, foliage and parked vehicles may occasionally be detected. This is a normal operation condition.

· The following conditions may reduce the ability of the radar to detect other vehicles:
  - Severe weather
  - Road spray
  - Ice/frost/snow/dirt build-up on the vehicle

· Do not attach stickers (including transparent material), install accessories or apply additional paint near the radar sensors. These conditions may reduce the ability of the radar to detect other vehicles.

· Excessive noise (for example, audio system volume, open vehicle window) will interfere with the chime sound, and it may not be heard.

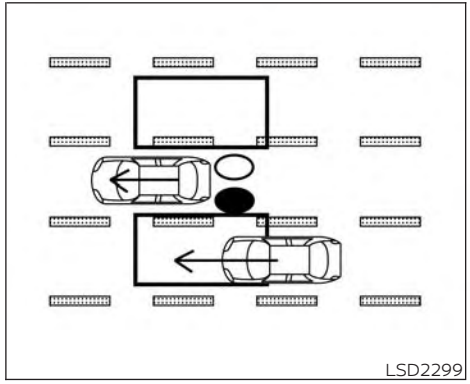

Illustration 1 – Approaching from behind

BSW DRIVING SITUATIONS

Indicator on

Indicator off

Indicator flashing

Another vehicle approaching from behind

Illustration 1: The side BSW/RCTA indicator light illuminates if a vehicle enters the detection zone from behind in an adjacent lane.

NOTE:

- **The radar sensors may not detect vehicles which are approaching rapidly from behind.**

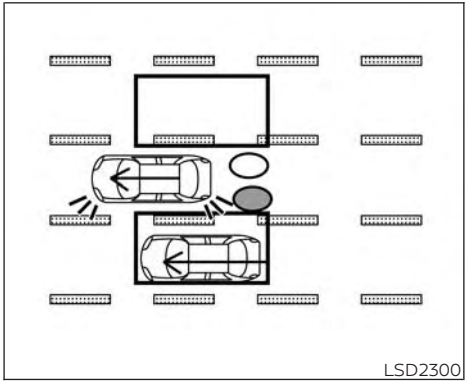

Illustration 2 – Approaching from behind

Illustration 2: If the driver activates the turn signal when another vehicle is in the detection zone, then the system chimes (twice) and the side BSW/RCTA indicator light flashes.

NOTE:

- **The radar sensors may not detect vehicles which are approaching rapidly from behind.**
- **If the driver activates the turn signal before a vehicle enters the detection zone, the side BSW/RCTA indicator light will flash but no chime will sound when the other vehicle is detected.**

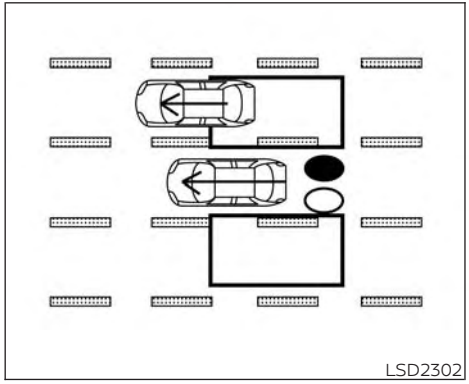

Illustration 3 – Overtaking another vehicle

Overtaking another vehicle

Illustration 3: The side BSW/RCTA indicator light illuminates if you overtake a vehicle and that vehicle stays in the detection zone for approximately 2 seconds.

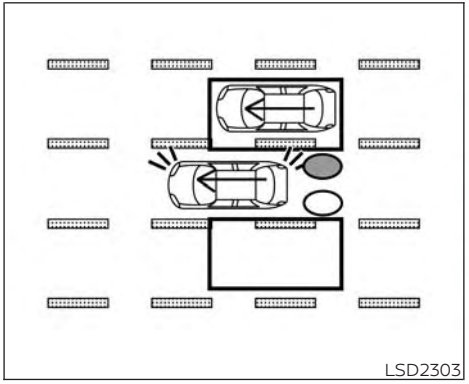

Illustration 4 – Overtaking another vehicle

Illustration 4: If the driver activates the turn signal while another vehicle is in the detection zone, then the system chimes (twice) and the side BSW/RCTA indicator light flashes.

NOTE:

- **When overtaking several vehicles in a row, the vehicles after the first vehicle may not be detected if they are traveling close together.**
- **The radar sensors may not detect slower moving vehicles if they are passed quickly.**
- **If the driver activates the turn signal before a vehicle enters the detection zone, the side BSW/RCTA indicator light will flash but no chime will sound when the other vehicle is detected.**

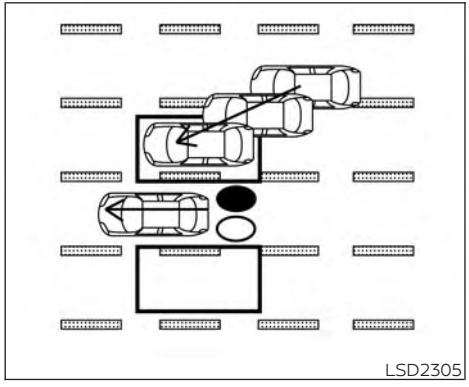

Illustration 5 – Entering from the side

Entering from the side

Illustration 5: The side BSW/RCTA indicator light illuminates if a vehicle enters the detection zone from either side.

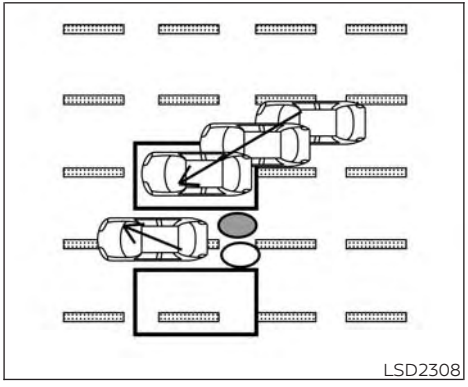

Illustration 6 – Entering from the side

Illustration 6: If the driver activates the turn signal while another vehicle is in the detection zone, then the system chimes (twice) and the side BSW/RCTA indicator light flashes.

NOTE:

- **If the driver activates the turn signal before a vehicle enters the detection zone, the side BSW/RCTA indicator light will flash but no chime will sound when the other vehicle is detected.**
- **The radar sensors may not detect a vehicle which is traveling at about the same speed as your vehicle when it enters the detection zone.**

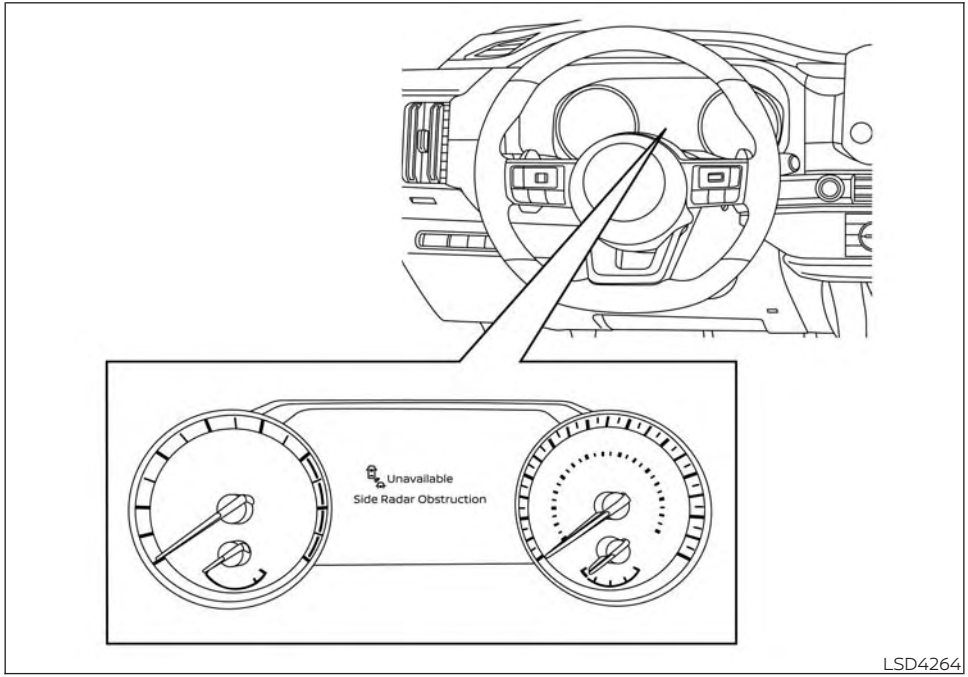

For vehicles with the 7 inch (18 cm) display

SYSTEM TEMPORARILY UNAVAILABLE

When radar blockage is detected, the system will be deactivated automatically. The "Unavailable: Side Radar Obstruction" or "Not available: Side Radar Obstructed" warning message will appear in the vehicle information display.

The system is not available until the conditions no longer exist.

The radar sensors may be blocked by temporary ambient conditions such as splashing water, mist or fog. The blocked condition may also be caused by objects such as ice, frost or dirt obstructing the radar sensors.

NOTE:

If the BSW system stops working, the RCTA and Intelligent Blind Spot Intervention system (if so equipped) will also stop working.

Action to take:

When the above conditions no longer exist, the system will resume automatically.

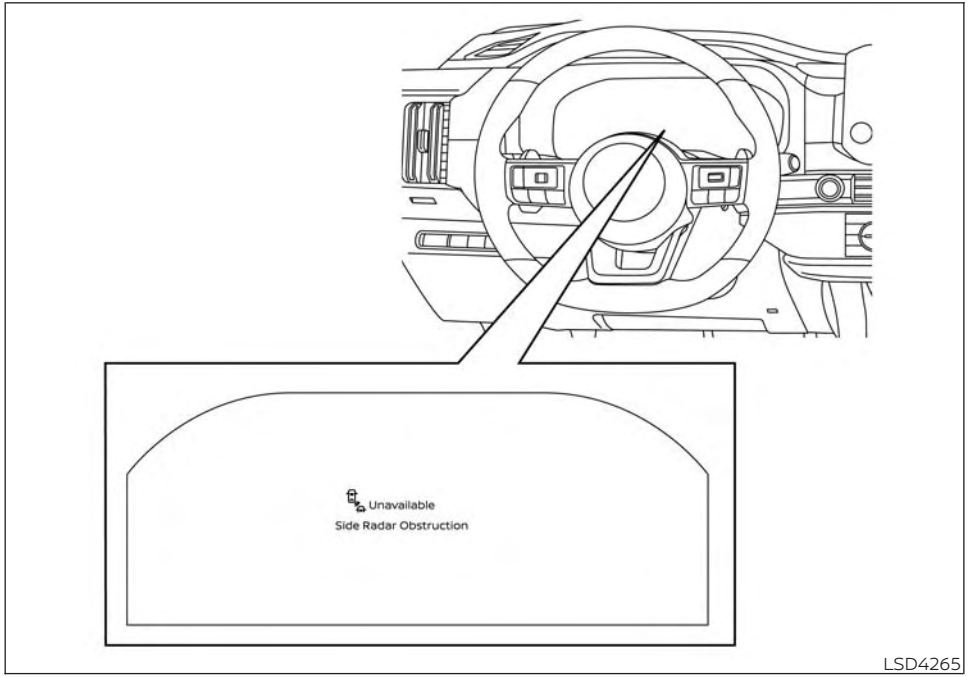

For vehicles with the 12.3 inch (31.2 cm) display

Malfunction

If the BSW system malfunctions, it will turn off automatically. The system malfunction warning message will appear in the vehicle information display.

NOTE:

If the BSW system stops working, the I-BSI and RCTA systems (if so equipped) will also stop working.

Action to take:

Stop the vehicle in a safe location, place the vehicle in the P (Park) position, turn the engine off and restart the engine. If the message continues to appear, have the system checked. It is recommended that you visit a NISSAN dealer for this service.

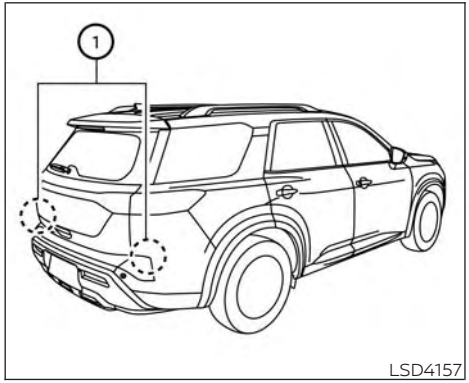

SYSTEM MAINTENANCE

The two radar sensors ① for the BSW and RCTA systems are located near the rear bumper. Always keep the area near the radar sensors clean.

The radar sensors may be blocked by temporary ambient conditions such as splashing water, mist or fog.

The blocked condition may also be caused by objects such as ice, frost or dirt obstructing the radar sensors.

Check for and remove objects obstructing the area around the radar sensors.

Do not attach stickers (including transparent material), install accessories or apply additional paint near the radar sensors.

Do not strike or damage the area around the radar sensors. It is recommended that you consult a NISSAN dealer if the area around the radar sensors is damaged due to a collision.

Radio frequency statement

For Mexico

La operación de este equipo está sujeta a las siguientes dos condiciones:

1. es posible que este equipo o dispositivo no cause interferencia perjudicial y
2. este equipo o dispositivo debe aceptar cualquier interferencia, incluyendo la que pueda causar su operación no deseada.



For Australia

INTELLIGENT BLIND SPOT INTERVENTION (if so equipped)

⚠ WARNING

Failure to follow the warnings and instructions for proper use of the Intelligent Blind Spot Intervention system could result in serious injury or death.

- **The Intelligent Blind Spot Intervention system is not a replacement for proper driving procedure and is not designed to prevent contact with vehicles or objects. When changing lanes, always use the side and rear mirrors and turn and look in the direction you will move to ensure it is safe to change lanes. Never rely solely on the Intelligent Blind Spot Intervention system.**
- **There is a limitation to the detection capability of the radar or the sonar. Not every moving object or vehicle will be detected. Using the Intelligent Blind Spot Intervention system under some road, ground, lane marker, traffic or weather conditions could lead to improper system operation. Always rely on your own operation to avoid accidents.**

The Intelligent Blind Spot Intervention system helps alert the driver of other vehicles in adjacent lanes when changing lanes, and helps assist the driver to return the vehicle to the center of the traveling lane.

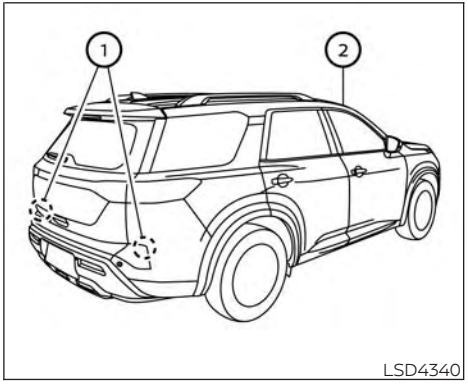

The Intelligent Blind Spot Intervention system uses radar sensors ① installed near the rear bumper to detect other vehicles in an adjacent lane. In addition to the radar sensors, the Intelligent Blind Spot Intervention system uses a camera ② installed behind the windshield to monitor the lane markers of your traveling lane.

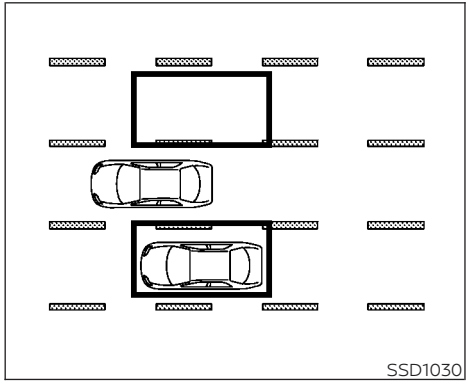

Detection zone

The radar sensors can detect vehicles on either side of your vehicle within the detection zone shown as illustrated.

The detection zone starts from the outside mirror of your vehicle and extends approximately 3.0 m (10ft) behind the rear bumper, and approximately 3.0 m (10ft) sideways.

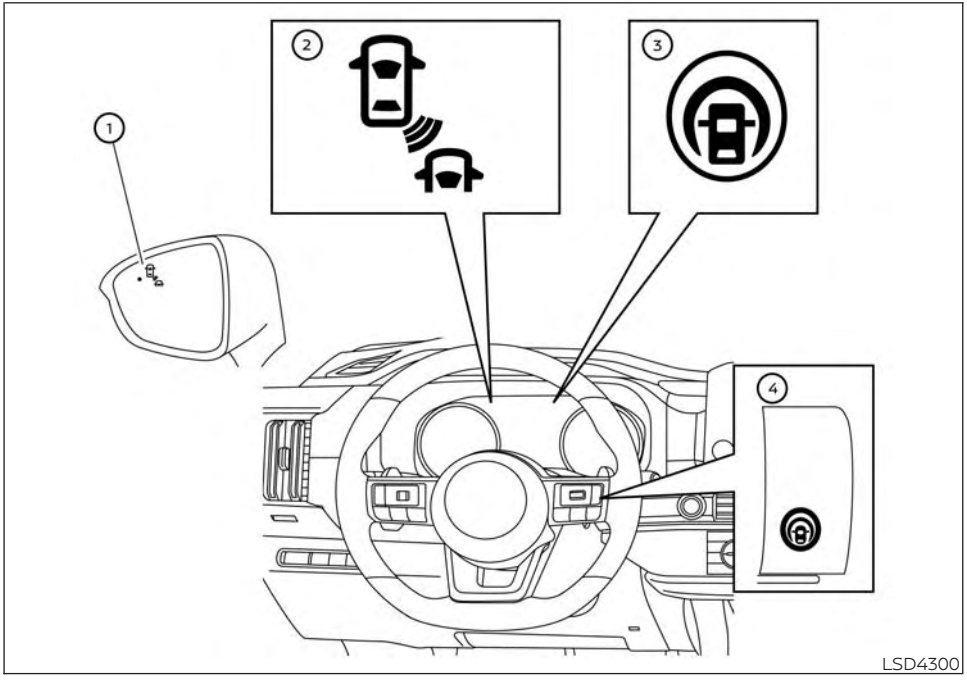

For vehicles with the 7 inch (18 cm) display

INTELLIGENT BLIND SPOT INTERVENTION SYSTEM OPERATION

① Side indicator light
② BSW indicator

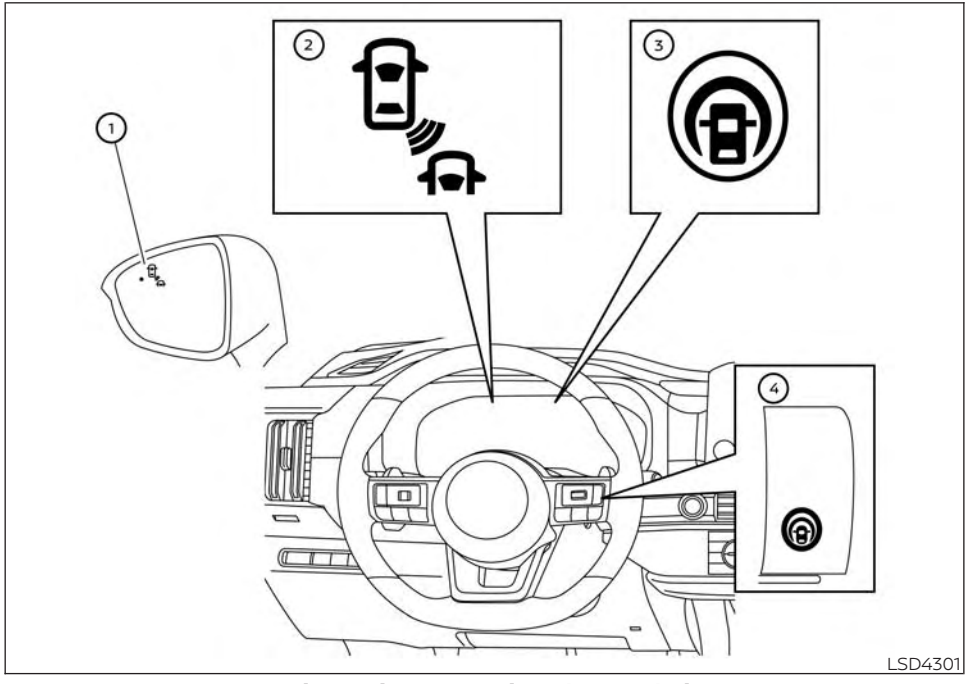

For vehicles with the 12.3 inch (31.2 cm) display

③ Intelligent Blind Spot Intervention indicator

④ ProPILOT Assist switch

The Intelligent Blind Spot Intervention system operates above approximately 60 km/h (37 mph).

If the radar sensors detect a vehicle in the detection zone, the side indicator light (1) illuminates.

If the turn signal is then activated, the system chimes (twice) and the side indicator light flashes. The side indicator light continues to flash until the detected vehicle leaves the detection zone. The brightness of the side indicator light is adjusted automatically depending on the brightness of the ambient light.

If the Intelligent Blind Spot Intervention system is ON and your vehicle approaches a lane marker while another vehicle is in the detection zone, the system chimes (three times) and the side indicator light flashes. The Intelligent Blind Spot Intervention system activates by controlling the steering input of the vehicle for a short period of time to help return the vehicle back to the center of the driving lane. The Intelligent Blind Spot Intervention system operates regardless of turn signal usage.

NOTE:

- **Intelligent Blind Spot Intervention warning and system application will only be activated if the side indicator light is already illuminated when your vehicle approaches a lane marker. If another vehicle comes into the detection zone after your vehicle has crossed a lane marker, no Intelligent Blind Spot Intervention warning or system application will be activated. For additional information, see "Intelligent Blind Spot Intervention driving situations" (P. 5-83).**
- **The Intelligent Blind Spot Intervention system is typically activated earlier than the Intelligent Lane Intervention system when your vehicle is approaching a lane marker.**

To turn on the Intelligent Blind Spot Intervention system, push the ProPILOT Assist switch on the steering wheel after starting the engine. The Intelligent Blind Spot Intervention indicator will illuminate. Push the ProPILOT Assist switch again to turn off the Intelligent Blind Spot Intervention system. The Intelligent Blind Spot Intervention indicator will turn off.

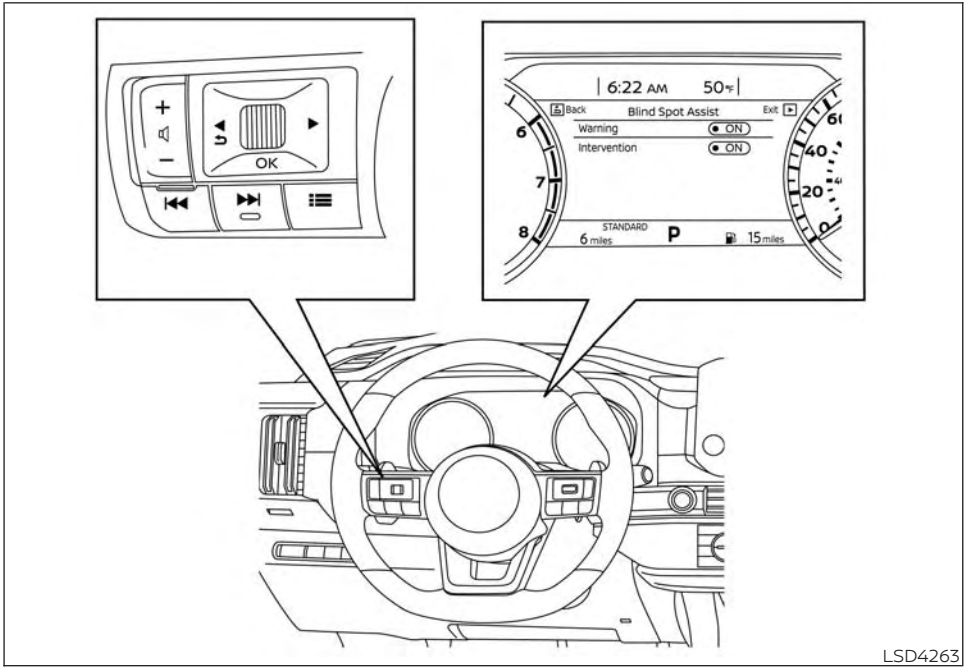

For vehicles with the 7 inch (18 cm) display

HOW TO ENABLE/DISABLE THE INTELLIGENT BLIND SPOT INTERVENTION SYSTEM

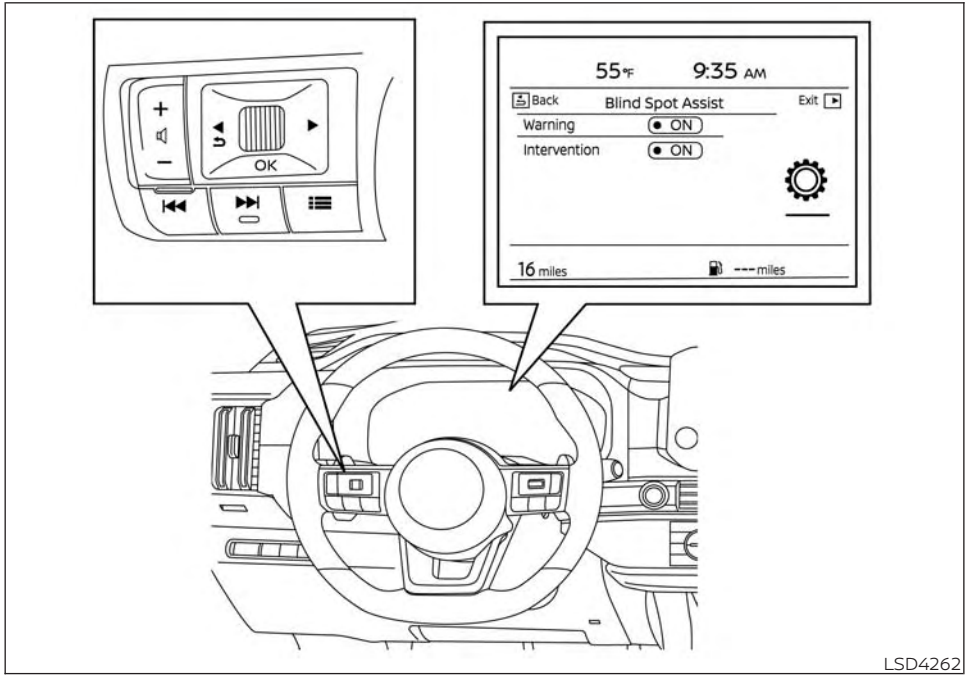

For vehicles with the 12.3 inch (31.2 cm) display

Perform the following steps to enable or disable the Intelligent Blind Spot Intervention system:

1. Press the ◀▶ button until "Settings" displays in the vehicle information display. Use the scroll dial to select "Driver Assistance." Then press the OK button.
2. Select "Blind Spot Assist" or "Blind Spot" and press the OK button.
3. Select "Intervention" and use the OK button to turn the system on or off.
4. Push the ProPILOT Assist switch to turn the system on or off.

NOTE:

When Blind Spot Intervention is ON in the settings menu, turning the ProPILOT Assist switch (if so equipped) ON will activate the Intelligent Blind Spot Intervention system at the same time. For additional information, see "Intelligent Lane Intervention" (P. 5-163).

INTELLIGENT BLIND SPOT INTERVENTION SYSTEM LIMITATIONS

⚠ WARNING

Listed below are the system limitations for the Intelligent Blind Spot Intervention system. Failure to operate the vehicle in accordance with these system limitations could result in serious injury or death.

- **The Intelligent Blind Spot Intervention system cannot detect all vehicles under all conditions.**
- **The radar sensors may not be able to detect and activate Intelligent Blind Spot Intervention when certain objects are present such as:**
  - **Pedestrians, bicycles, or animals.**
  - **Vehicles such as motorcycles, low height vehicles, or high ground clearance vehicles.**
  - **Vehicles remaining in the detection zone when you accelerate from a stop. For additional information, see "Intelligent Blind Spot Intervention driving situations" (P. 5-83).**
  - **Oncoming vehicles.**
  - **A vehicle merging into an adjacent lane at a speed approximately the same as your vehicle.**
  - **A vehicle approaching rapidly from behind.**
  - **A vehicle which your vehicle overtakes rapidly.**
  - **A vehicle that passes through the detection zone quickly.**
- **The radar sensors' detection zone is designed based on a standard lane width. When driving in a wider lane, the radar sensors may not detect vehicles in an adjacent lane. When driving in a narrow lane, the radar sensors may detect vehicles driving two lanes away.**
- **The radar sensors are designed to ignore most stationary objects; however, objects such as guardrails, walls, foliage and parked vehicles may occasionally be detected. This is a normal operation condition.**
- **The following conditions may reduce the ability of the radar to detect other vehicles:**
  - **Severe weather**
  - **Road spray**
  - **Ice/frost/dirt build-up on the vehicle**
- **Do not attach stickers (including transparent material), install accessories or apply additional paint near the radar sensors. These conditions may reduce the ability of the radar to detect other vehicles.**
- **The camera may not detect lane markers in the following situations and the Intelligent Blind Spot Intervention system may not operate properly.**
  - **On roads where there are multiple parallel lane markers; lane markers that are faded or not painted clearly; yellow painted lane markers; non-standard lane markers; lane markers covered with water, dirt, snow, etc.**
  - **On roads where discontinued lane markers are still detectable.**

- On roads where there are sharp curves.
- On roads where there are sharply contrasting objects, such as shadows, snow, water, wheel ruts, seams or lines remaining after road repairs.
- On roads where the traveling lane merges or separates.
- When the vehicle's traveling direction does not align with the lane markers.
- When traveling close to the vehicle in front of you, which obstructs the lane camera unit detection range.
- When rain, snow or dirt adheres to the windshield in front of a lane camera unit.
- When the headlights are not bright due to dirt on the lens or if aiming is not adjusted properly.
- When strong light enters a lane camera unit. (For example: light directly shines on the front of the vehicle at sunrise or sunset.)
- When a sudden change in brightness occurs. (For example: when the vehicle enters or exits a tunnel or under a bridge.)

· Do not use the Intelligent Blind Spot Intervention system under the following conditions because the system may not function properly.
- During bad weather (for example: rain, fog, snow, etc.).
- When driving on slippery roads, such as on ice or snow, etc.
- When driving on winding or uneven roads.
- When there is a lane closure due to road repairs.
- When driving in a makeshift or temporary lane.
- When driving on roads where the lane width is too narrow.
- When driving with a tire that is not within normal tire conditions (e.g., tire wear, low tire pressure, installation of spare tire, tire chains, nonstandard wheels).
- When the vehicle is equipped with non-original brake parts or suspension parts.
- When towing a trailer or other vehicle.

· Excessive noise (e.g., audio system volume, open vehicle window) will interfere with the chime sound, and it may not be heard.

INTELLIGENT BLIND SPOT INTERVENTION DRIVING SITUATIONS

Indicator on

Indicator off

Indicator flashing

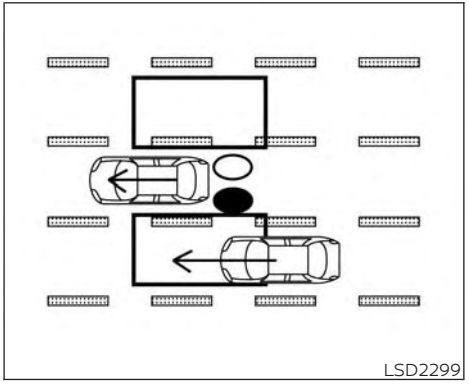

Illustration 1 – Approaching from behind

Another vehicle approaching from behind

Illustration 1: The side indicator light illuminates if a vehicle enters the detection zone from behind in an adjacent lane.

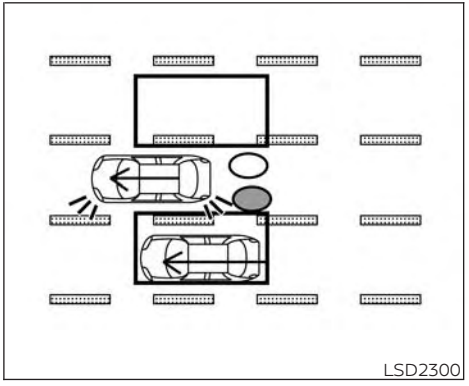

Illustration 2 – Approaching from behind

Illustration 2: If the driver activates the turn signal then the system chimes a sound (twice) and the side indicator light flashes.

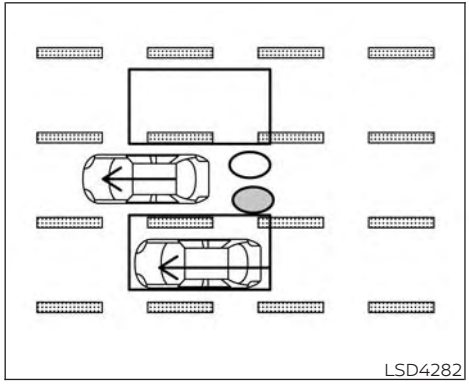

Illustration 3 – Approaching from behind

Illustration 3: If the Intelligent Blind Spot Intervention system is on and your vehicle approaches a lane marker while another vehicle is in the detection zone, the system chimes (three times) and the side indicator light flashes. Then the Intelligent Blind Spot Intervention system activates to help return the vehicle back to the center of the driving lane.

NOTE:

- **The radar sensors may not detect vehicles which are approaching rapidly from behind.**
- **If the driver activates the turn signal before a vehicle enters the detection zone, the side indicator light will flash but no chime will sound when the other vehicle is detected.**

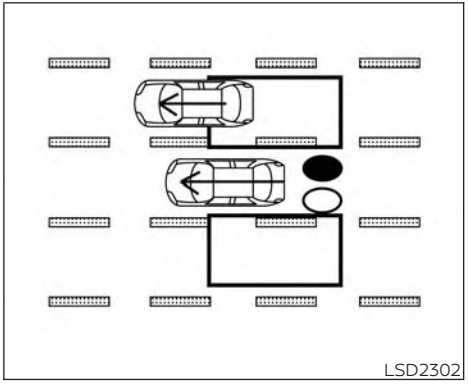

Illustration 4– Overtaking another vehicle

Overtaking another vehicle

Illustration 4: The side indicator light illuminates if you overtake a vehicle and that vehicle stays in the detection zone for approximately 3 seconds.

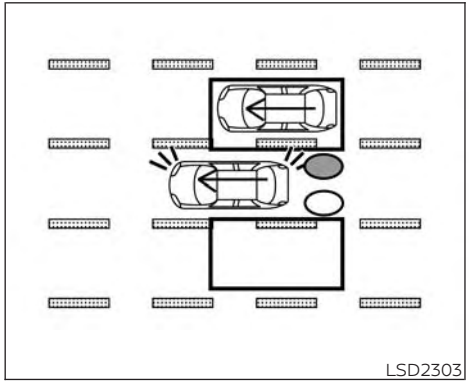

Illustration 5– Overtaking another vehicle

Illustration 5: If the driver activates the turn signal while another vehicle is in the detection zone, then the system chimes (twice) and the side indicator light flashes.

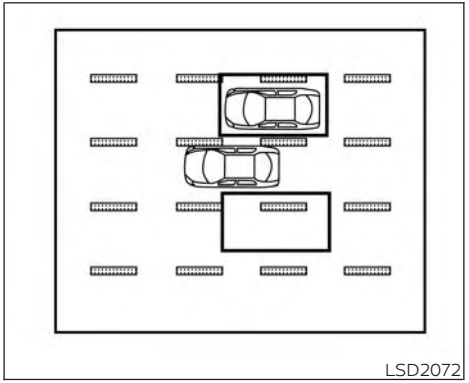

Illustration 6– Overtaking another vehicle

Illustration 6: If the Intelligent Blind Spot Intervention system is on and your vehicle approaches a lane marker while another vehicle is in the detection zone, the system chimes (three times) and the side indicator light flashes. The Intelligent Blind Spot Intervention system activates to help return the vehicle back to the center of the driving lane.

NOTE:

- **When overtaking several vehicles in a row, the vehicles after the first vehicle may not be detected if they are traveling close together.**
- **The radar sensors may not detect slower moving vehicles if they are passed quickly.**
- **If the driver activates the turn signal before a vehicle enters the detection zone, the side indicator light will flash but no chime will sound when the other vehicle is detected.**

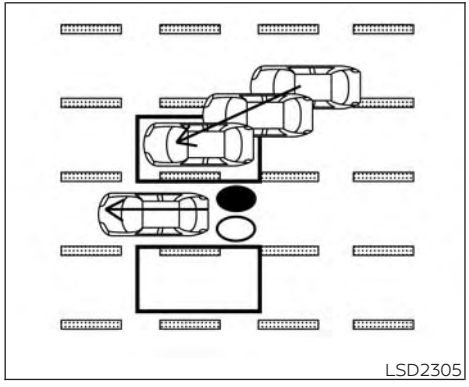

Illustration 7– Entering from the side

Entering from the side

Illustration 7: The side indicator light illuminates if a vehicle enters the detection zone from either side.

NOTE:

The radar sensors may not detect a vehicle which is traveling at about the same speed as your vehicle when it enters the detection zone.

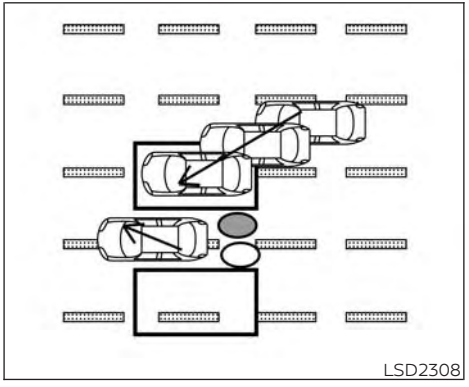

Illustration 8– Entering from the side

Illustration 8: If the driver activates the turn signal while another vehicle is in the detection zone, then the side indicator light flashes and a chime will sound twice.

NOTE:

If the driver activates the turn signal before a vehicle enters the detection zone, the side indicator light will flash but no chime will sound when another vehicle is detected.

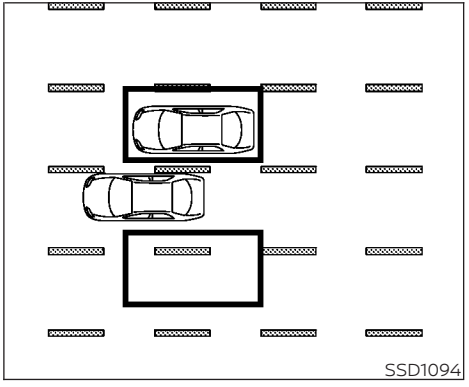

Illustration 9– Entering from the side

Illustration 9: If the Intelligent Blind Spot Intervention system is on and your vehicle approaches the lane marker while another vehicle is in the detection zone, the system chimes (three times) and the side indicator light flashes. The Intelligent Blind Spot Intervention system activates to help return the vehicle back to the center of the driving lane.

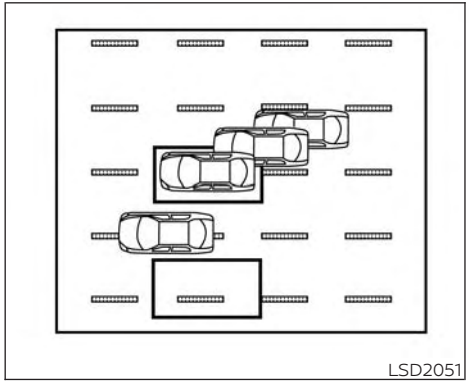

Illustration 10: – Entering from the side

Illustration 10: The Intelligent Blind Spot Intervention system will not operate if your vehicle is on a lane marker when another vehicle enters the detection zone. In this case only the BSW system operates.

NOTE:

- **The radar sensors may not detect a vehicle which is traveling at about the same speed as your vehicle when it enters the detection zone.**
- **If the driver activates the turn signal before a vehicle enters the detection zone, the side indicator light will flash but no chime will sound when the other vehicle is detected.**
- **Intelligent Blind Spot Intervention will not operate or will stop operating and only a warning chime will sound under the following conditions:**
  - **When the brake pedal is depressed.**
  - **When the vehicle is accelerated during Intelligent Blind Spot Intervention system operation.**
  - **When steering quickly.**
  - **When the ICC, Intelligent Forward Collision Warning or Intelligent Emergency Braking with Pedestrian Detection warnings sound.**
  - **When the hazard warning flashers are operated.**
  - **When driving on a curve at a high speed.**

SYSTEM TEMPORARILY UNAVAILABLE

Under the following conditions, a chime will sound, the following message will appear in the vehicle information display and the Intelligent Blind Spot Intervention system will be turned off automatically. The Intelligent Blind Spot Intervention system will not be available until the conditions no longer exist.

- "Not available Poor Road Conditions"
- When the VDC or ESP system (except TCS function) or ABS operates.
- "Currently not available"
- When the VDC or ESP system is turned off.

Action to take:

When the above conditions no longer exist, push the ProPILOT Assist switch again to turn the Intelligent Blind Spot Intervention system back on.

When radar blockage is detected, the Intelligent Blind Spot Intervention system will be turned off automatically, a chime will sound and the "Unavailable: Side Radar Obstruction" or "Not available: Side radar obstructed" warning message will appear in the vehicle information display.

The Intelligent Blind Spot Intervention system is not available until the conditions no longer exist. For additional information, see "System maintenance" (P. 5-88).

Action to take:

When the above conditions no longer exist, turn the Intelligent Blind Spot Intervention system on again. If the "Unavailable: Side Radar Obstruction" or "Not available: Side radar obstructed" warning message appears even after the Intelligent Blind Spot Intervention system is turned on again, stop the vehicle in a safe location, place the vehicle in the P (Park) position and turn the engine off. Check for and remove objects obscuring the radar sensors on the rear bumper, and restart the engine.

If the vehicle is parked in direct sunlight under high temperature conditions (over approximately 40°C (104°F)) and then the Intelligent Blind Spot Intervention system is turned on, the Intelligent Blind Spot Intervention system may be deactivated automatically. The "Unavailable: High Cabin Temperature" or "Not available: High cabin temperature" warning message will appear in the vehicle information display and a chime will sound.

Action to take:

When the interior temperature is reduced, push the ProPILOT Assist switch again to turn the Intelligent Blind Spot Intervention system back on.

SYSTEM MALFUNCTION

When the Intelligent Blind Spot Intervention system malfunctions, it will be turned off automatically, a chime will sound, and the "Not available System Malfunction" warning message with the BSW indicator (orange) will appear in the vehicle information display.

Action to take:

Stop the vehicle in a safe location, place the vehicle in the P (Park) position, turn the engine off and restart the engine. If the "Not available System Malfunction" warning message with the BSW indicator (orange) continues to be displayed, have the Intelligent Blind Spot Intervention system checked. It is recommended you visit a certified NISSAN dealer for this service.

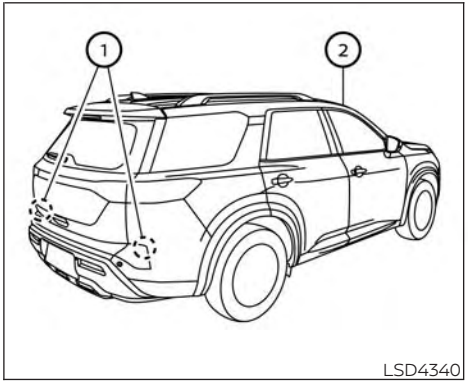

SYSTEM MAINTENANCE

The two radar sensors ① for the Intelligent Blind Spot Intervention system are located near the rear bumper. Always keep the area near the radar sensors clean.

The radar sensors may be blocked by temporary ambient conditions such as splashing water, mist or fog.

The blocked condition may also be caused by objects such as ice, frost or dirt obstructing the radar sensors.

Check for and remove objects obstructing the radar sensors.

Do not attach stickers (including transparent material), install accessories or apply additional paint near the radar sensors.

Do not strike or damage the area around the radar sensors.

It is recommended you visit a certified NISSAN dealer if the area around the radar sensors is damaged due to a collision.

The lane camera unit ② for Intelligent Blind Spot Intervention system is located above the inside mirror. To keep the proper operation of Intelligent Blind Spot Intervention and prevent a system malfunction, be sure to observe the following:

- Always keep the windshield clean.
- Do not attach a sticker (including transparent material) or install an accessory near the camera unit.
- Do not place reflective materials, such as white paper or a mirror, on the instrument panel. The reflection of sunlight may adversely affect the camera unit's capability of detecting the lane markers.
- Do not strike or damage the areas around the camera unit. Do not touch the camera lens or remove the screw located on the camera unit. It is recommended that you contact a certified NISSAN dealer if the camera unit is damaged due to an accident.

Radio frequency statement

For Mexico

La operación de este equipo está sujeta a las siguientes dos condiciones:

1. es posible que este equipo o dispositivo no cause interferencia perjudicial y
2. este equipo o dispositivo debe aceptar cualquier interferencia, incluyendo la que pueda causar su operación no deseada.



For Australia

REAR CROSS TRAFFIC ALERT (RCTA) (if so equipped)

⚠ WARNING

Failure to follow the warnings and instructions for proper use of the RCTA system could result in serious injury or death.

- **The RCTA system is not a replacement for proper driving procedures and is not designed to prevent contact with vehicles or objects. When backing out of a parking space, always use the side and rear mirrors and turn and look in the direction your vehicle will move. Never rely solely on the RCTA system.**

The RCTA system will assist you when backing out from a parking space. When the vehicle is in reverse, the system is designed to detect other vehicles approaching from the right or left of the vehicle. If the system detects cross traffic, it will alert you.

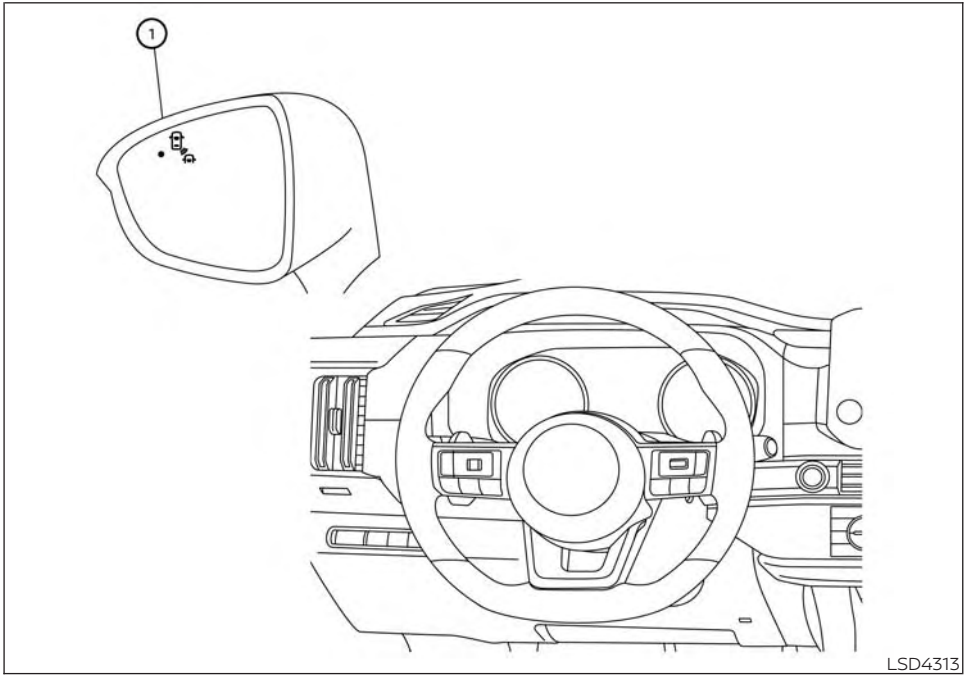

For vehicles with the 7 inch (18 cm) display

RCTA SYSTEM OPERATION

① Side BSW/RCTA Indicator Light

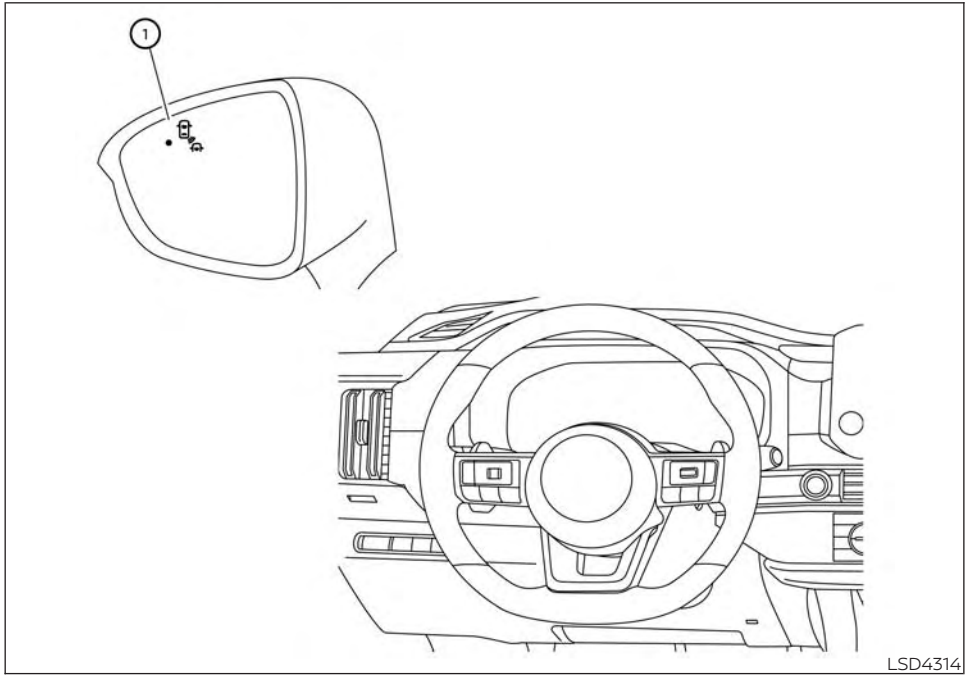

For vehicles with the 12.3 inch (31.2 cm) display

The RCTA system can help alert the driver of an approaching vehicle when the driver is backing out of a parking space.

When the shift position is in R (Reverse) and the vehicle speed is less than approximately 8 km/h (5 mph), the RCTA system is operational.

If the radar detects an approaching vehicle from either side, the system chimes (once) and the side BSW/RCTA indicator light flashes on the side the vehicle is approaching from.

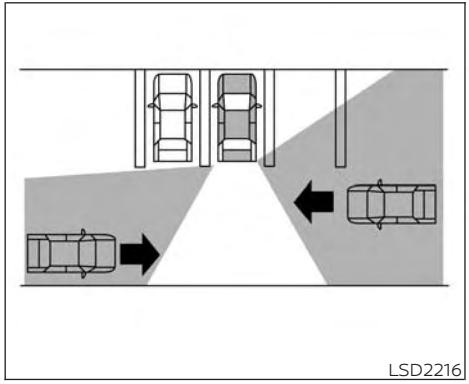
LSD2216

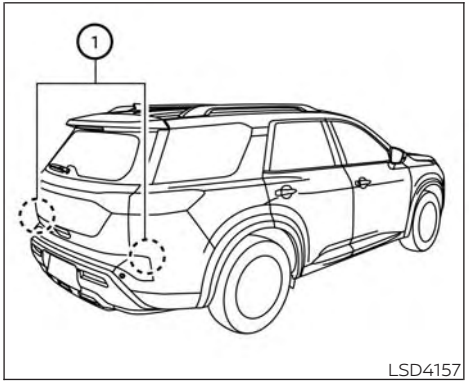

LSD4157

The RCTA system uses radar sensors ① installed on both sides near the rear bumper to detect an approaching vehicle.

The radar sensors ① can detect an approaching vehicle from up to approximately 66 ft. (20 m) away.

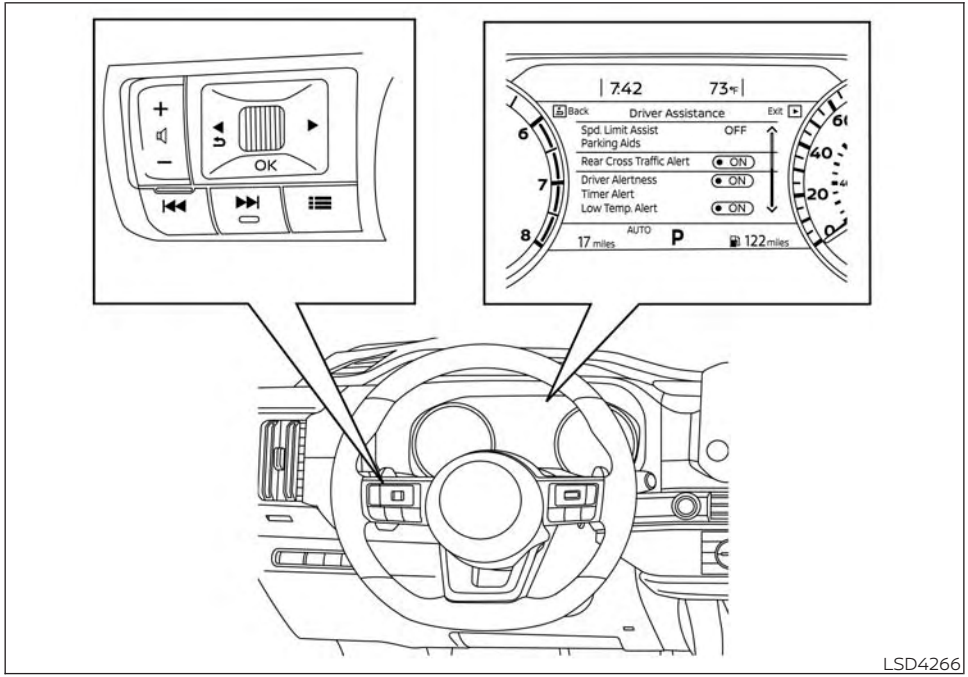

For vehicles with the 7 inch (18 cm) display

HOW TO ENABLE/DISABLE THE RCTA SYSTEM

When the RCTA system is enabled in the vehicle information display, the system can be turned off by pushing the warning systems switch (if so equipped). For additional information, see "Warning systems switch" (P. 2-96).

Perform the following steps to enable or disable the RCTA system.

1. Press the ◀▶ button until "Settings" displays in the vehicle information display. Use the scroll dial to select "Driver Assistance." Then press the OK button.
2. Select "Rear Cross Traffic Alert" and press the OK button to turn the system on or off.

NOTE:

- **When enabling/disabling the system, the system setting will be retained even if the engine is restarted.**

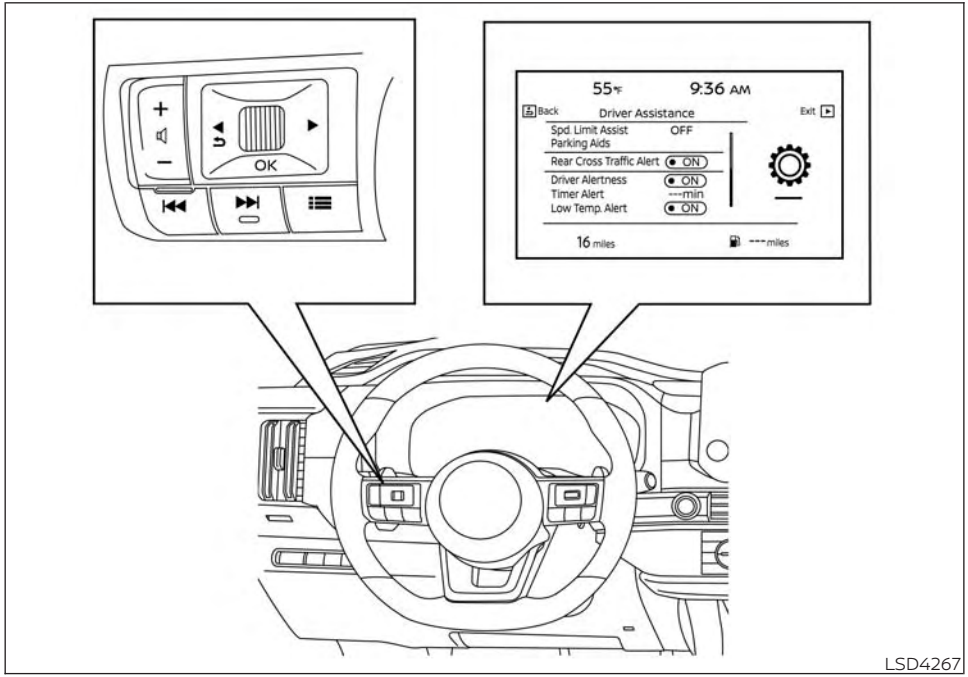

For vehicles with the 12.3 inch (31.2 cm) display

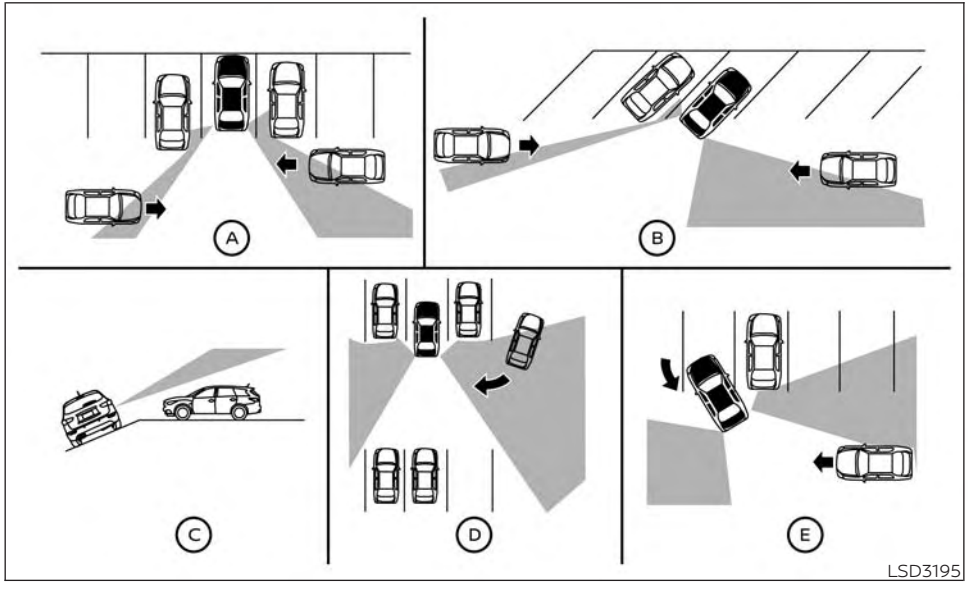

RCTA SYSTEM LIMITATIONS

⚠WARNING

Listed below are the system limitations for the RCTA system. Failure to operate the vehicle in accordance with these system limitations could result in serious injury or death.

- **Always check surroundings and turn to check what is behind you before backing up. The radar sensors detect approaching (moving) vehicles. The radar sensors cannot detect every object such as:**
  - **Pedestrians, bicycles, motorcycles, animals or child-operated toy vehicles**
  - **A vehicle that is passing at speeds greater than approximately 30 km/h (19 mph)**
  - **A vehicle that is passing at speeds lower than approximately 8 km/h (5 mph)**
- **The radar sensors may not detect approaching vehicles in certain situations:**
  - **Illustration Ⓐ: When a vehicle parked next to you obstructs the beam of the radar sensor.**
  - **Illustration Ⓑ: When the vehicle is parked in an angled parking space.**
  - **Illustration Ⓒ: When the vehicle is parked on inclined ground.**
  - **Illustration Ⓓ: When an approaching vehicle turns into your vehicle's parking lot aisle.**

- Illustration Ⓔ: When the angle formed by your vehicle and approaching vehicle is small

· The following conditions may reduce the ability of the radar to detect other vehicles:
  - Severe weather
  - Road spray
  - Ice/frost/snow/dirt build-up on the vehicle
· Do not attach stickers (including transparent material), install accessories or apply additional paint near the radar sensors. These conditions may reduce the ability of the radar to detect other vehicles
· Excessive noise (e.g., audio system volume, open vehicle window) will interfere with the chime sound, and it may not be heard.

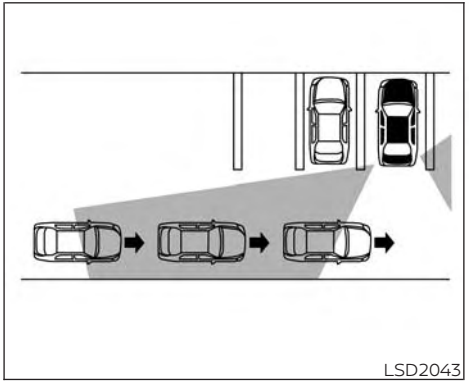

Illustration 1

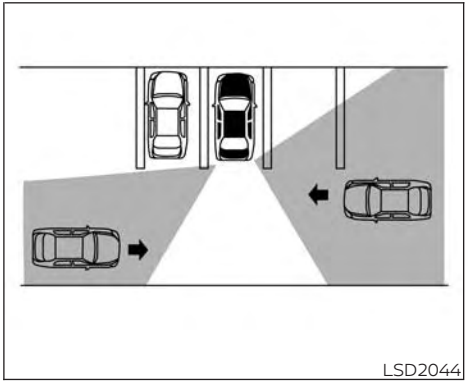

Illustration 2

NOTE:

In the case of several vehicles approaching in a row (Illustration 1) or in the opposite direction (Illustration 2), a chime may not be sounded by the RCTA system after the first vehicle passes the sensors.

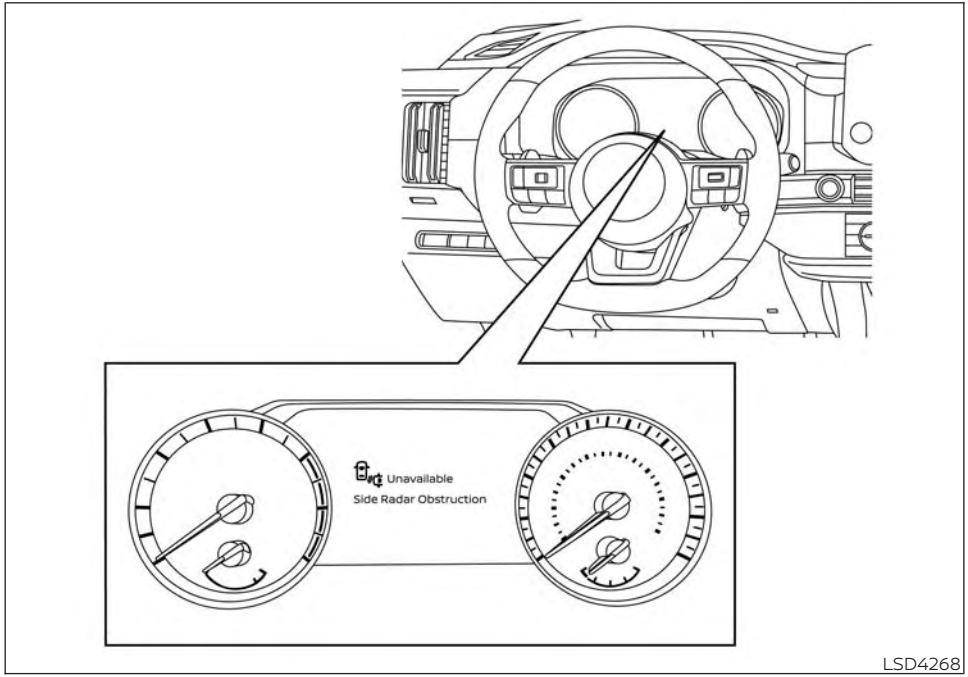

For vehicles with the 7 inch (18 cm) display

SYSTEM TEMPORARILY UNAVAILABLE

When radar blockage is detected, the system will be deactivated automatically. The "Unavailable: Side Radar Obstruction" or "Not available: Side radar obstructed" warning message will appear in the vehicle information display.

The systems are not available until the conditions no longer exist.

The radar sensors may be blocked by temporary ambient conditions such as splashing water, mist or fog.

The blocked condition may also be caused by conditions such as ice, snow, frost or dirt obstructing the radar sensors.

NOTE:

If the BSW system stops working, the RCTA and Intelligent Blind Spot Intervention systems (if so equipped) will also stop working.

Action to take

When the above conditions no longer exist, the system will resume automatically.

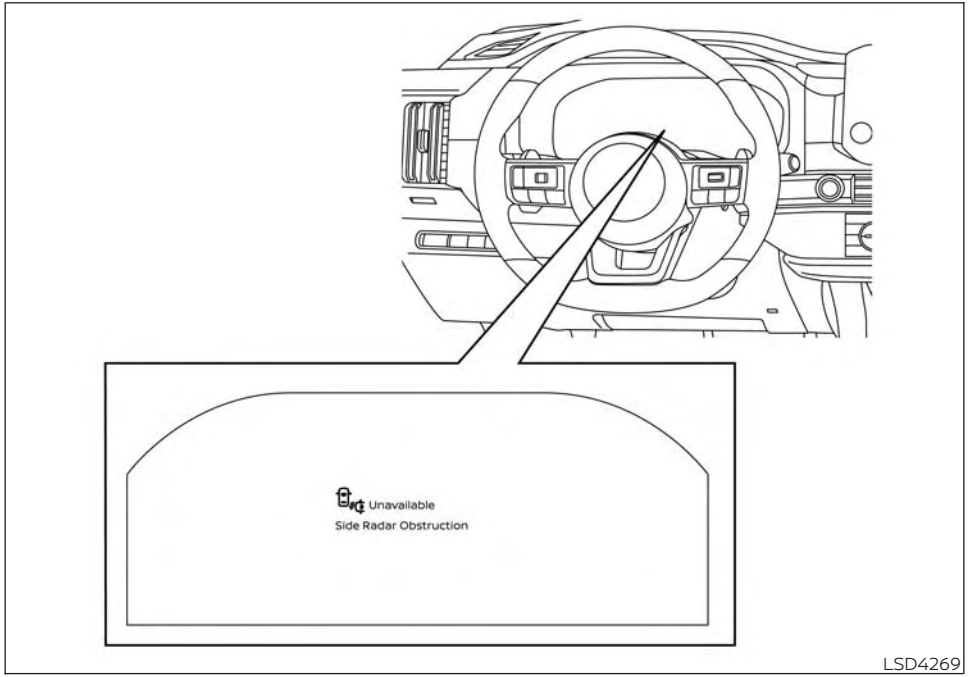

For vehicles with the 12.3 inch (31.2 cm) display

Malfunction

When the RCTA system malfunctions, it will turn off automatically. The system malfunction warning message will appear in the vehicle information display.

NOTE:

If the BSW system stops working, the RCTA system (if so equipped) will also stop working.

Action to take

Stop the vehicle in a safe location, place the vehicle in the P (Park) position, turn the engine off and restart the engine. If the message continues to appear, have the system checked. It is recommended that you visit a NISSAN dealer for this service.

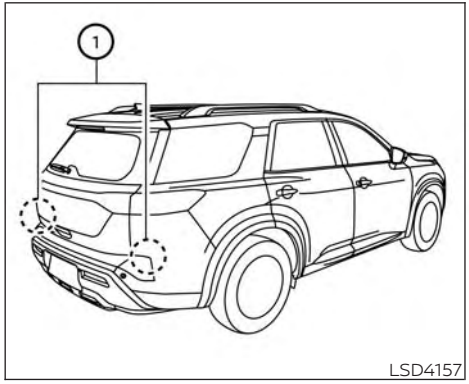

SYSTEM MAINTENANCE

The two radar sensors ① for the BSW and RCTA systems are located near the rear bumper. Always keep the area near the radar sensors clean.

The radar sensors may be blocked by temporary ambient conditions such as splashing water, mist or fog.

The blocked condition may also be caused by objects such as ice, frost or dirt obstructing the radar sensors.

Check for and remove objects obstructing the area around the radar sensors.

Do not attach stickers (including transparent material), install accessories or apply additional paint near the radar sensors.

Do not strike or damage the area around the radar sensors. It is recommended that you consult a NISSAN dealer if the area around the radar sensors is damaged due to a collision.

Radio frequency statement

For Mexico

La operación de este equipo está sujeta a las siguientes dos condiciones:

1. es posible que este equipo o dispositivo no cause interferencia perjudicial y
2. este equipo o dispositivo debe aceptar cualquier interferencia, incluyendo la que pueda causar su operación no deseada.



For Australia

The speed limiter allows you to set the desired vehicle speed limit. While the speed limiter is activated, the driver can perform normal braking and acceleration, but the vehicle will not exceed the set speed.

⚠WARNING

- **Always observe posted speed limits. Do not set the speed over them.**
- **Always confirm the setting status of the speed limiter in the vehicle information display.**

When the speed limiter is on, the cruise control (if so equipped) or the Intelligent Cruise Control (ICC) system (if so equipped) cannot be operated.

SPEED LIMITER OPERATIONS

The speed limiter can be set between the following speeds:

- 30 to 230 km/h (20 to 140 mph)

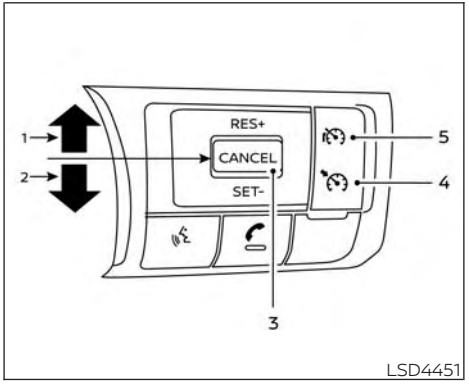

Models with Cruise Control system

The speed limiter set switches are located on the steering wheel.

1. RES+ switch
2. SET- switch
3. CANCEL switch
4. Cruise control , ICC or ProPILOT switch. For additional information, see "Cruise control" (P. 5-103), "Intelligent Cruise Control (ICC) system" (P. 5-105) and "ProPILOT Assist" (P. 5-133).

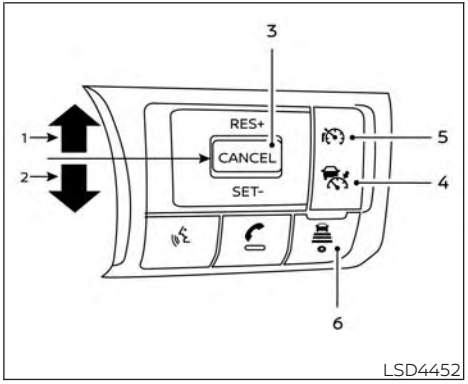

Models with Intelligent Cruise Control (ICC) system

5. Speed limiter MAIN switch

   (When this switch is pushed, the speed limiter sets to the stand-by mode. If the cruise control, Intelligent Cruise Control (ICC) system or ProPILOT Assist is on, the system will turn off and the speed limiter sets to the stand-by mode.)

6. DISTANCE switch

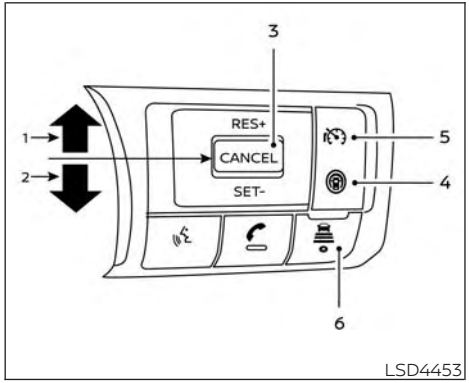

Models with ProPILOT Assist

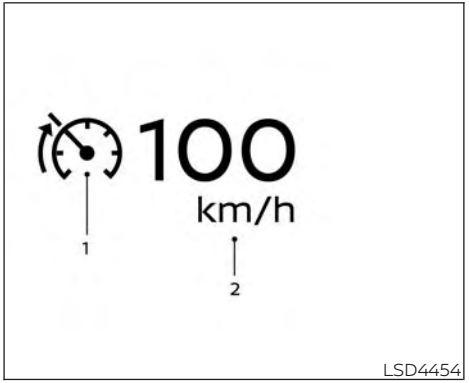

The speed limiter operating condition is shown in the vehicle information display.

1. Speed limiter indicator

   This indicator indicates the condition of the speed limiter system depending on the color.

   - Speed limiter indicator (white):
     Indicates that the speed limiter MAIN switch is ON.
   - Sped limiter indicator (green):
     Indicates that speed limiter is set.

2. Set speed indicator

   The speed unit can be converted between "km/h" and "mph". For additional information, refer to the NissanConnect® Owner's Manual.

When the vehicle speed exceeds the set speed limit, the set speed indicator blinks. If the vehicle speed is exceeding the set speed limit for more than 30 seconds, an audible warning is triggered.

The speed limiter will not automatically brake the vehicle to the set speed limit.

Turning on speed limiter

Push the speed limiter MAIN switch. The speed limiter indicator (white) illuminates in the vehicle information display. The set speed indicator shows "– – –."

Setting speed limit

1. Push the SET- switch.
   - When the vehicle is stopped, the speed will be set at 30 km/h (20 mph).
   - While driving, the speed limit will be set at the current speed.
2. When the speed limit is set, the speed limiter set indicator (green) and the set speed indicator illuminate in the vehicle information display.

Changing set speed limit

Use either of the following operations to change the speed limit:

- Push and hold the RES+ or SET- switch. The set speed will increase or decrease by approximately 5 km/h or 5 mph.
- Push, then quickly release the RES+ or SET- switch. Each time you do this, the set speed will increase or decrease by approximately 1 km/h or 1 mph.

If the vehicle speed exceeds the set speed indicated on the display for approximately 30 seconds after changing the set speed, the system will trigger an audible warning.

Resuming preset speed limit

Push the RES+ switch. The speed limiter set indicator (green) illuminates and the speed limiter will resume the last set speed limit. If the vehicle is driven at a speed above the last set speed limit, the set speed indicator will blink. If the vehicle speed exceeds the set speed indicated on the display for approximately 30 seconds after resuming the preset speed, the system will trigger an audible warning.

Canceling speed limit

To cancel the speed limiter, push the CANCEL switch. The speed limiter set indicator (green) will change to the speed limiter indicator (white). (The set speed indicator will remain on in the display.)

If the accelerator pedal is fully depressed (beyond the resistance point), the speed limiter is temporarily suspended and the vehicle speed may be controlled above the set speed. (The transmission may downshift into a lower gear.) The speed limiter set indicator (green) indicator will remain on in the display.

While the system is temporarily suspended and the set speed is exceeded, the set speed indicator will blink but the system will not trigger any audible warning.

If the accelerator returns to the resistance point and the vehicle speed returns to the set speed, the speed limiter will set and limit the vehicle speed.

When one of the following operations is performed, the speed limiter will be canceled and the speed limiter set indicator (green) will turn off. These canceling methods will erase the set speed limit memory.

- Push the speed limiter MAIN switch.
- Push the cruise control switch or the ICC switch.

Speed limiter malfunction

If the speed limiter malfunctions, the speed limiter set indicator (green) in the vehicle information display will blink. Turn the speed limiter MAIN switch off and have the system checked. It is recommended that you visit a NISSAN dealer for this service.

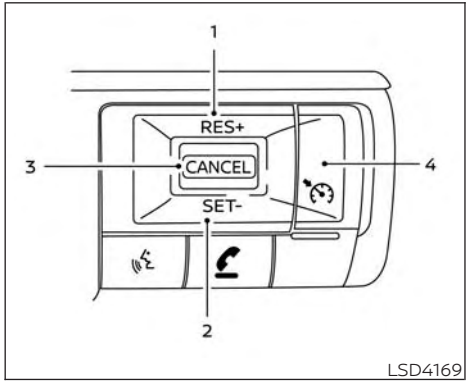

PRECAUTIONS ON CRUISE CONTROL

1. RES+ switch
2. SET- switch
3. CANCEL switch
4. ON/OFF switch

- If the cruise control system malfunctions, it cancels automatically. The indicator illuminates in the vehicle information display then blinks to warn the driver. For additional information, see "Vehicle information display – 7 inch (18 cm) Type A" (P. 2-24) or "Vehicle information display – 12.3 inch (31 cm) Type B" (P. 2-49).
- If the indicator blinks, push the cruise control ON/OFF switch off and have the system checked. It is recommended that you visit a NISSAN dealer for this service.
- The indicator may blink when the cruise control ON/OFF switch is pushed ON while pushing the RES+, SET-, or CANCEL switch. To properly set the cruise control system, use the following procedures.

⚠WARNING

Do not use the cruise control when driving under the following conditions:

- **When it is not possible to keep the vehicle at a set speed.**
- **In heavy traffic or in traffic that varies in speed.**
- **On winding or hilly roads.**
- **On slippery roads (rain, snow, ice, etc.).**
- **In very windy areas.**

Doing so could cause a loss of vehicle control and result in an accident.

CRUISE CONTROL OPERATIONS

The cruise control allows driving at a speed between 40 - 144 km/h (25 - 89 mph) without keeping your foot on the accelerator pedal.

To turn on the cruise control, push the cruise control ON/OFF switch on. The indicator (white) in the vehicle information display will illuminate.

To set cruising speed, accelerate the vehicle to the desired speed, push the SET- switch and release it. The indicator (green) in the vehicle information display will illuminate. Take your foot off the accelerator pedal. Your vehicle maintains the set speed.

- **To pass another vehicle,** depress the accelerator pedal. When you release the pedal, the vehicle returns to the previously set speed.
- The vehicle may not maintain the set speed when going up or down steep hills. If this happens, drive without the cruise control.

To cancel the preset speed, use one of the following three methods:

- Push the CANCEL switch; the indicator (green) in the vehicle information display goes out.
- Tap the brake pedal; the indicator (green) goes out.
- Push the cruise control ON/OFF switch off. The indicator in the vehicle information display go out.

The cruise control is automatically canceled and the indicator (green) in the vehicle information display goes out if:

- You depress the brake pedal while pushing the RES+ or SET- switch. The preset speed is deleted from memory.
- The vehicle slows down more than 13 km/h (8 mph) below the set speed.
- You move the shift lever to N (Neutral).

To reset at a faster cruising speed, use one of the following three methods:

- Depress the accelerator pedal. When the vehicle attains the desired speed, push and release the SET- switch.
- Push and hold the RES+ switch. When the vehicle attains the speed you desire, release the switch.
- Push and release the RES+ switch. Each time you do this, the set speed increases by about 1.6 km/h (1 mph).

To reset at a slower cruising speed, use one of the following three methods:

- Lightly tap the brake pedal. When the vehicle attains the desired speed, push the SET- switch and release it.
- Push and hold the SET- switch. Release the switch when the vehicle slows to the desired speed.
- Push and release the SET- switch. Each time you do this, the set speed decreases by about 1.6 km/h (1 mph).

To resume the preset speed, push and release the RES+ switch. The vehicle returns to the last set cruising speed when the vehicle speed is over 40 km/h (25 mph).

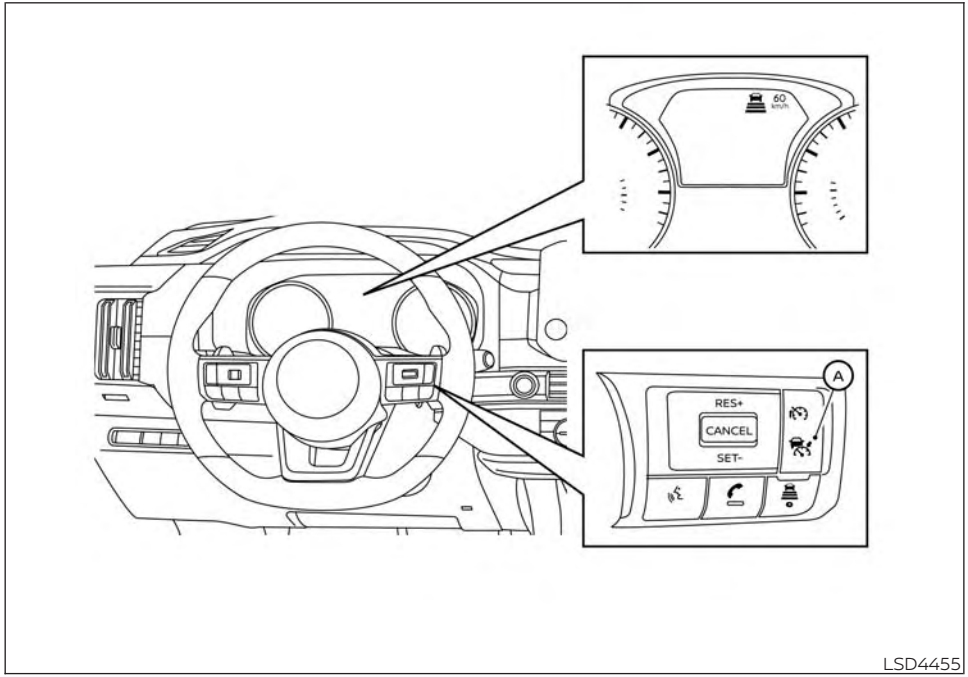

For vehicles with the 7 inch (18 cm) display

Ⓐ ICC Switch

⚠WARNING

Failure to follow the warnings and instructions for proper use of the ICC system could result in serious injury or death.

- **The ICC system is only an aid to assist the driver and is not a collision warning or avoidance device. It is the driver's responsibility to stay alert, drive safely, and be in control of the vehicle at all times.**
- **Always observe posted speed limits and do not set the speed over them.**
- **Always drive carefully and attentively when using the ICC system. Read and understand the Owner's Manual thoroughly before using the ICC system. To avoid serious injury or death, do not rely on the system to prevent accidents or to control the vehicle's speed in emergency situations. Do not use the ICC system except in appropriate road and traffic conditions.**

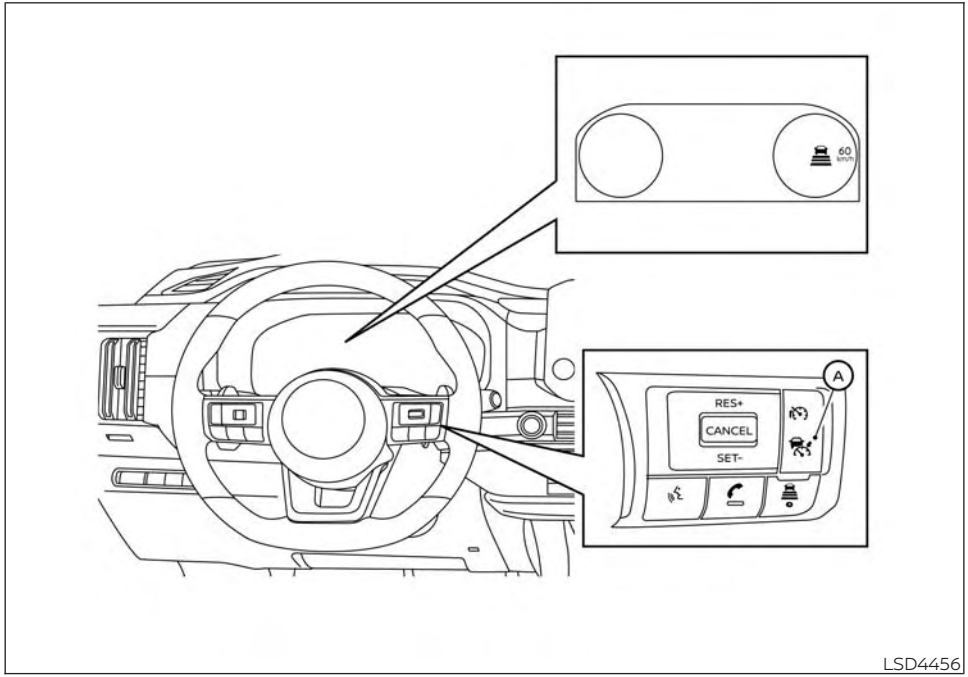

For vehicles with the 12.3 inch (31.2 cm) display

- **In the conventional (fixed speed) cruise control mode, a warning chime will not sound to warn you if you are too close to the vehicle ahead. Pay special attention to the distance between your vehicle and the vehicle ahead of you or a collision could occur.**

The ICC system maintains a selected distance from the vehicle in front of you within the speed range of 0 to 144 km/h (0 to 90 mph), except for GCC, 0 to 180 km/h (0 to 112 mph) up to the set speed. The set speed can be selected by the driver between 30 to 144 km/h (20 to 90 mph), except for GCC, 30 to 180 km/h (20 to 112 mph).

The vehicle travels at a set speed when the road ahead is clear.

The ICC system can be set to one of two cruise control modes:

- **Vehicle-to-vehicle distance control mode:** For maintaining a selected distance between your vehicle and the vehicle in front of you up to the preset speed
- **Conventional (fixed speed) cruise control mode:** For cruising at a preset speed

Push the ICC switch Ⓐ to choose the cruise control mode between the vehicle-to-vehicle distance control mode and the conventional (fixed speed) cruise control mode.

Once a control mode is activated, it cannot be changed to the other cruise control mode. To change the mode, push the ICC switch Ⓐ once to turn the system off. Then push the ICC switch Ⓐ again to turn the system back on and select the desired cruise control mode.

Always confirm the setting in the ICC system display.

For the vehicle-to-vehicle distance control mode, see "Vehicle-to-vehicle distance control mode" (P. 5-108).

For the conventional (fixed speed) cruise control mode, see "Conventional (fixed speed) cruise control mode" (P. 5-127).

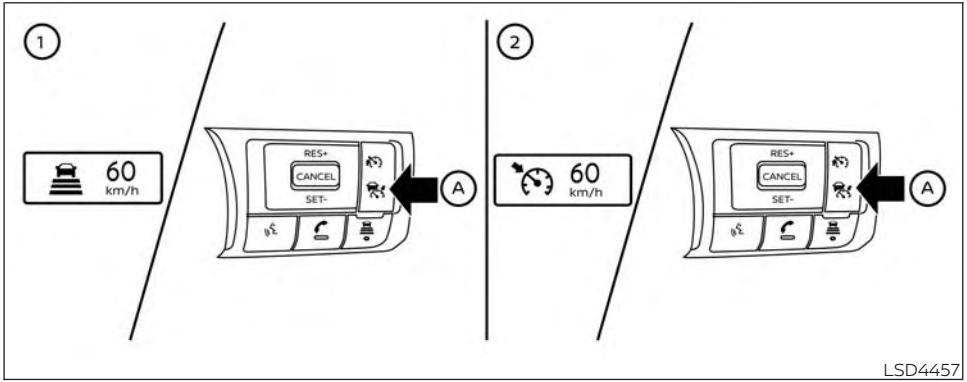

HOW TO SELECT THE CRUISE CONTROL MODE

Selecting the vehicle-to-vehicle distance control mode: To choose the vehicle-to-vehicle distance control mode ①, quickly push and release the ICC switch Ⓐ.

Selecting the conventional (fixed speed) cruise control mode: To choose the conventional (fixed speed) cruise control mode ②, push and hold the ICC switch Ⓐ for longer than approximately 1.5 seconds. For additional information, see "Conventional (fixed speed) cruise control mode" (P. 5-127).

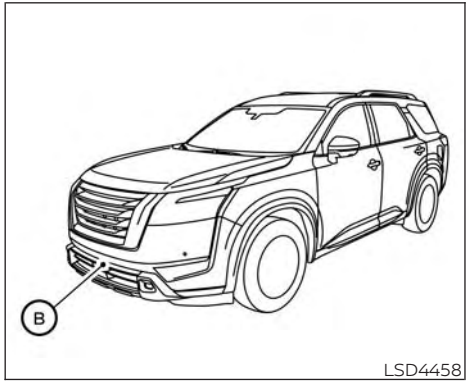

LSD4458

VEHICLE-TO-VEHICLE DISTANCE CONTROL MODE

In the vehicle-to-vehicle distance control mode, the ICC system automatically maintains a selected distance from the vehicle traveling in front of you according to that vehicle's speed (up to the set speed), or at the set speed when the road ahead is clear.

The ICC system is intended to enhance the operation of the vehicle when following a vehicle traveling in the same lane and direction.

If the radar sensor Ⓑ detects a slower moving vehicle ahead, the system will reduce the vehicle speed so that your vehicle follows the vehicle in front at the selected distance.

The system automatically controls the throttle and applies the brakes (up to approximately 40% of vehicle braking power) if necessary.

The detection range of the sensor is approximately 200 m (650 ft) ahead.

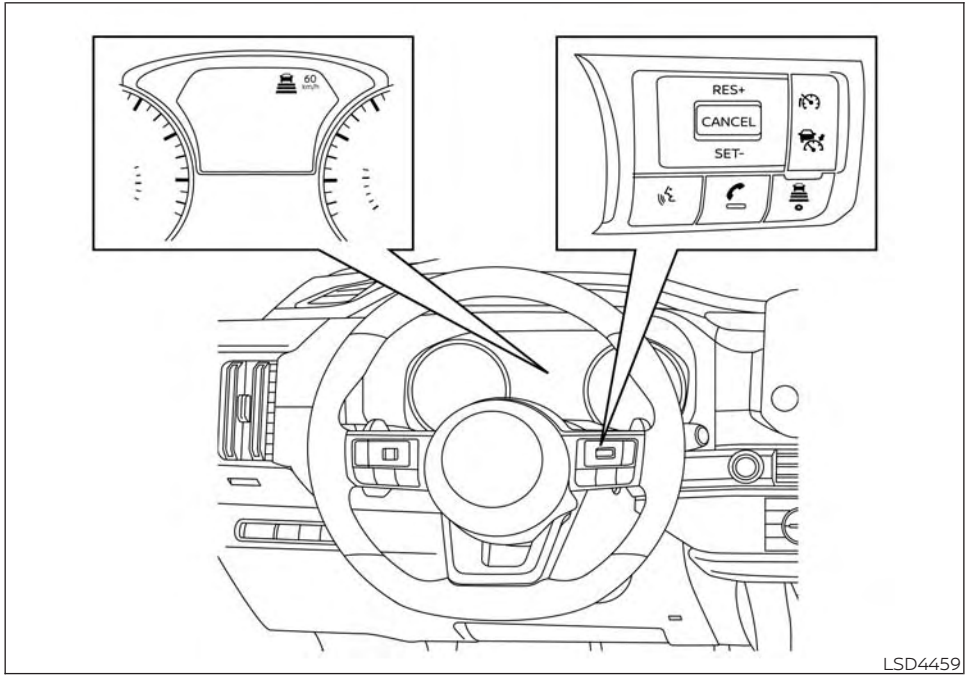

For vehicles with the 7 inch (18 cm) display

VEHICLE-TO-VEHICLE DISTANCE CONTROL MODE OPERATION

The vehicle-to-vehicle distance control mode is designed to maintain a selected distance from the vehicle in front of you and can reduce the speed to match a slower vehicle ahead. The system will decelerate the vehicle as necessary and if the vehicle ahead comes to a stop, the vehicle decelerates to a standstill. However, the ICC system can only apply up to 40% of the vehicle's total braking power.

This system should only be used when traffic conditions allow vehicle speeds to remain fairly constant or when vehicle speeds change gradually. If a vehicle moves into the traveling lane ahead or if a vehicle traveling ahead rapidly decelerates, the distance between vehicles may become closer because the ICC system cannot decelerate the vehicle quickly enough. If this occurs, the ICC system will sound a warning chime and blink the system display to notify the driver to take necessary action.

The system will cancel and a warning chime will sound if the speed is below approximately 25 km/h (15 mph) and a vehicle is not detected ahead. The system will also disengage when the vehicle goes above the maximum set speed.

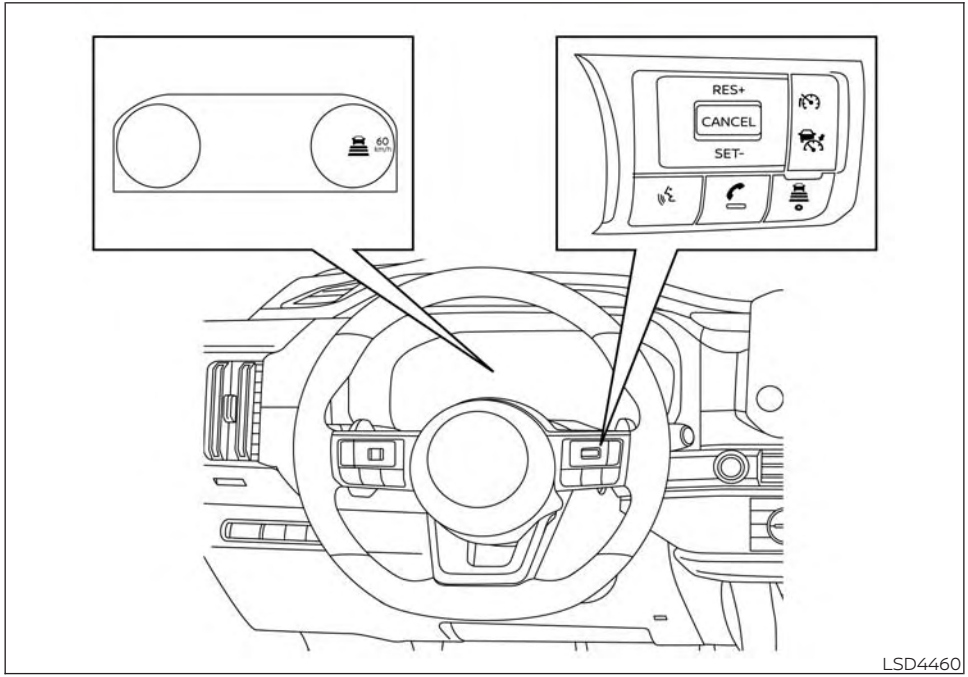

For vehicles with the 12.3 inch (31.2 cm) display

For additional information, see "Approach warning" (P. 5-118).

The following items are controlled in the vehicle-to-vehicle distance control mode:

- When there are no vehicles traveling ahead, the vehicle-to-vehicle distance control mode maintains the speed set by the driver. The set speed range is between approximately 30 and 144 km/h (20 and 90 mph).
- When there is a vehicle traveling ahead, the vehicle-to-vehicle distance control mode adjusts the speed to maintain the distance, selected by the driver, from the vehicle ahead. If the vehicle ahead comes to a stop, the vehicle decelerates to a standstill within the limitations of the system. The system will cancel once it judges a standstill with a warning chime.
- When the vehicle traveling ahead has moved out from its lane of travel, the vehicle-to-vehicle distance control mode accelerates and maintains vehicle speed up to the set speed.

The ICC system does not control vehicle speed or warn you when you approach stationary and slow moving vehicles. You must pay attention to vehicle operation to maintain proper distance from vehicles ahead when approaching toll gates or traffic congestion.

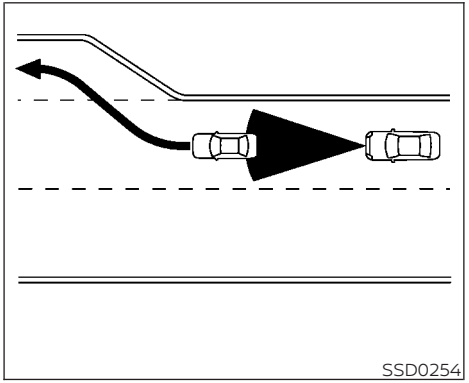
SSD0254

When driving on the freeway at a set speed and approaching a slower traveling vehicle ahead, the ICC system will adjust the speed to maintain the distance, selected by the driver, from the vehicle ahead. If the vehicle ahead changes lanes or exits the freeway, the ICC system will accelerate and maintain the speed up to the set speed. Pay attention to the driving operation to maintain control of the vehicle as it accelerates to the set speed.

The vehicle may not maintain the set speed on winding or hilly roads. If this occurs, you will have to manually control the vehicle speed.

Normally when controlling the distance to a vehicle ahead, this system automatically accelerates or decelerates your vehicle according to the speed of the vehicle ahead. Depress the accelerator to properly accelerate your vehicle when acceleration is required for a lane change. Depress the brake pedal when deceleration is required to maintain a safe distance to the vehicle ahead due to its sudden braking or if a vehicle cuts in. Always stay alert when using the ICC system.

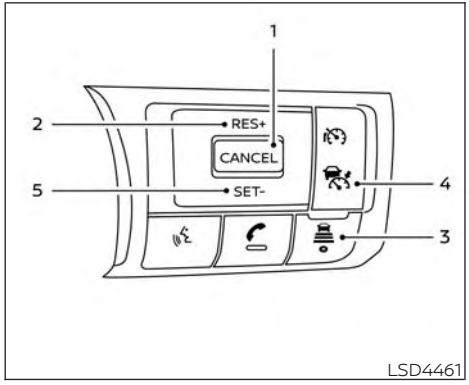

VEHICLE-TO-VEHICLE DISTANCE CONTROL MODE SWITCHES

The system is operated by the ICC switch and four control switches, all mounted on the steering wheel.

1. **CANCEL switch:**

   Deactivates the system without erasing the set speed.

2. **RES+ switch:**

   Resumes set speed or increases speed incrementally.

3. **DISTANCE switch:**

   Changes the vehicle's following distance:
   - Long
   - Middle
   - Short

4. **ICC Switch:**

   Master switch to activate the system.

5. **SET- switch:**

   Sets desired cruise speed or reduces speed incrementally.

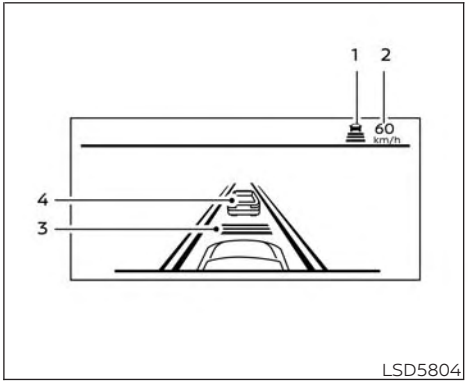

For vehicles with the 7 inch (18 cm) display

Vehicle-to-vehicle distance control mode display and indicators

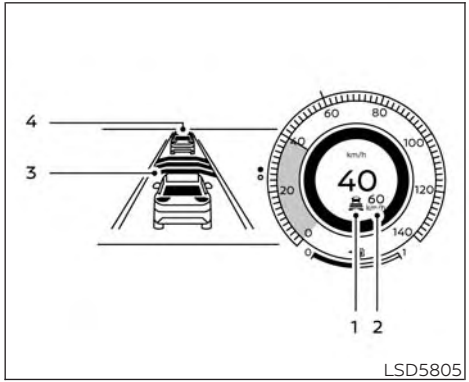

For vehicles with the 12.3 inch (31.2 cm) display

The display is located between the speedometer and tachometer.

1. This indicator indicates the ICC system status depending on a color:
   - **ICC system ON indicator (gray):** Indicates that the ICC switch is on.
   - **ICC system SET indicator (green):** Indicates that the cruising speed is set.
   - **ICC system warning (yellow):** Indicates that there is a malfunction in the ICC system.
2. Set vehicle speed indicator:

   Indicates the set vehicle speed.
3. Set distance indicator:

   Displays the selected distance between vehicles set with the distance switch.
4. Vehicle ahead detection indicator:

   Indicates whether it detects a vehicle in front of you.

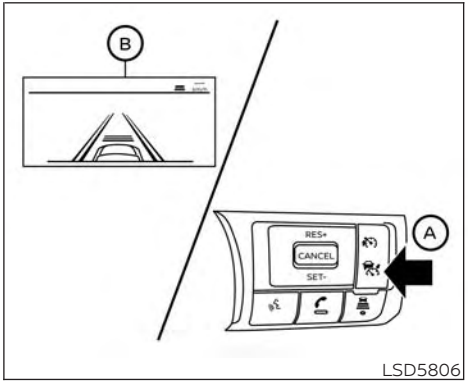

For vehicles with the 7 inch (18 cm) display

Operating vehicle-to-vehicle distance control mode

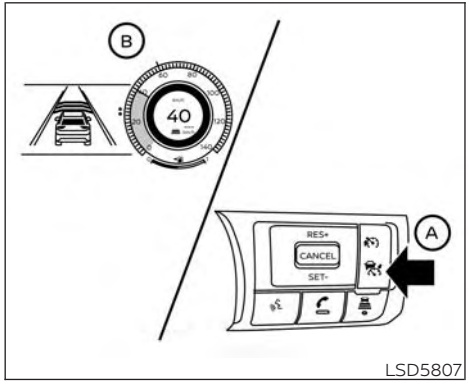

For vehicles with the 12.3 inch (31.2 cm) display

To turn on the cruise control, quickly push and release the ICC switch Ⓐ. The ICC system ON indicator (gray), set distance indicator and set vehicle speed indicator Ⓑ come on in a standby state for setting.

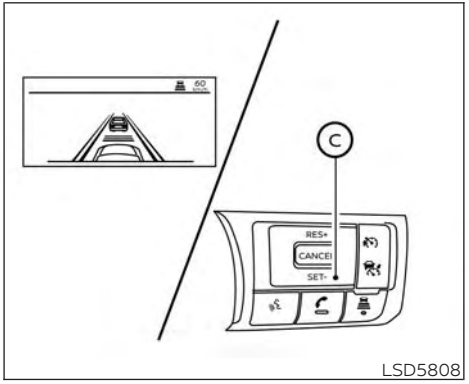

For vehicles with the 7 inch (18 cm) display

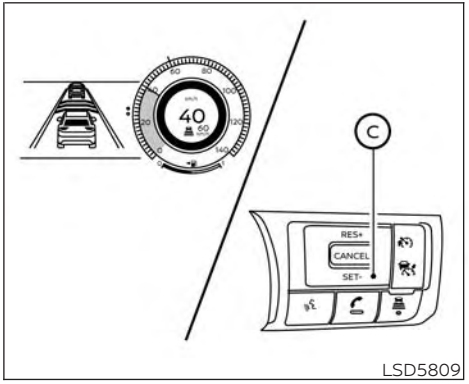

For vehicles with the 12.3 inch (31.2 cm) display

To set cruising speed, accelerate your vehicle to the desired speed, push the SET– switch Ⓒ and release it. The ICC system set indicator (green), vehicle ahead detection indicator, set distance indicator and set vehicle speed indicator Ⓑ will come on. Take your foot off the accelerator pedal. Your vehicle will maintain the set speed.

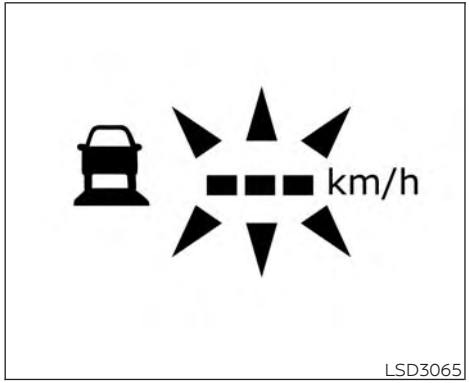

When the SET– switch is pushed under the following conditions, the system cannot be set and the ICC indicators will blink for approximately 2 seconds:

- When traveling below 30 km/h (20 mph) and a vehicle ahead is not detected
- When the shift lever is not in the D (Drive) or Manual mode
- When the electronic parking brake is applied
- When the brakes are operated by the driver

When the SET– switch is pushed under the following conditions, the system cannot be set.

A warning chime will sound and a message will pop up:

- When the VDC or ESP system is off (To use the ICC system, turn on the VDC or ESP system. Push the ICC switch to turn off the ICC system and reset the ICC switch by pushing the ICC switch again.)

  For additional information about the VDC or ESP system, see "Vehicle Dynamic Control (VDC) or Electronic Stability Program (ESP) system" (P. 5-232).
- When VDC or ESP is operating
- When a wheel is slipping (To use the ICC system, make sure the wheels are no longer slipping.)

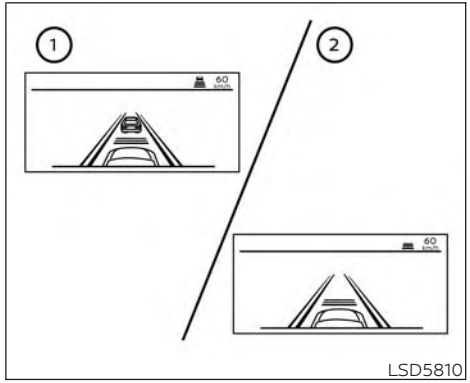

For vehicles with the 7 inch (18 cm) display

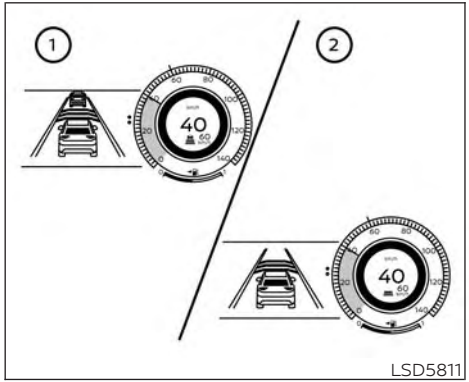

For vehicles with the 12.3 inch (31.2 cm) display

① System set display with vehicle ahead

② System set display without vehicle ahead

The driver sets the desired vehicle speed based on the road conditions. The ICC system maintains the set vehicle speed, similar to standard cruise control, as long as no vehicle is detected in the lane ahead. The ICC system displays the set speed.

Vehicle detected ahead

When a vehicle is detected in the lane ahead, the ICC system decelerates the vehicle by controlling the throttle and applying the brakes to match the speed of a slower vehicle ahead. The system then controls the vehicle speed based on the speed of the vehicle ahead to maintain the driver selected distance.

NOTE:

- **The stop lights of the vehicle come on when braking is performed by the ICC system.**
- **When the brake operates, a noise may be heard. This is not a malfunction.**

When a vehicle ahead is detected, the vehicle ahead detection indicator comes on. The ICC system will also display the set speed and selected distance.

Vehicle ahead not detected

When a vehicle is no longer detected ahead, the ICC system gradually accelerates your vehicle to resume the previously set vehicle speed. The ICC system then maintains the set speed.

When a vehicle is no longer detected, the vehicle ahead detection indicator turns off.

If a vehicle ahead appears during acceleration to the set vehicle speed or any time the ICC system is in operation, the system controls the distance to that vehicle.

When a vehicle is no longer detected under approximately 25 km/h (15 mph), the system will be canceled.

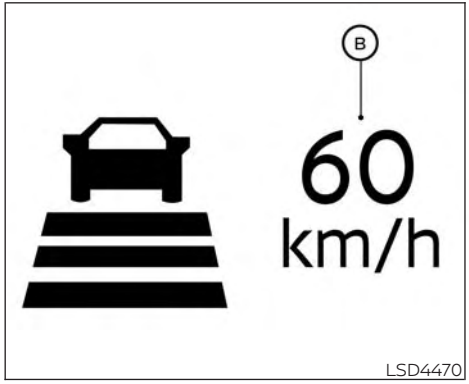

When passing another vehicle, the set speed indicator Ⓑ will flash when the vehicle speed exceeds the set speed. The vehicle detect indicator will turn off when the area ahead of the vehicle is open. When the pedal is released, the vehicle will return to the previously set speed.

Even though your vehicle speed is set in the ICC system, you can depress the accelerator pedal when it is necessary to accelerate your vehicle rapidly.

How to change the set vehicle speed

To cancel the preset speed, use one of the following methods:

- Push the CANCEL switch. The set vehicle speed indicator will go out.
- Tap the brake pedal. The set vehicle speed indicator will go out.
- Turn the ICC switch off. The ICC indicators will go out.

To reset at a faster cruising speed, use one of the following methods:

- Depress the accelerator pedal. When the vehicle attains the desired speed, push and release the SET– switch.
- Push and hold the RES+ switch. The set vehicle speed will increase by approximately 10 km/h (10 mph) (for ASR market) and 5 km/h (5 mph) (for all other markets).
- Push, then quickly release the RES+ switch. Each time you do this, the set speed will increase by approximately 1 km/h (1 mph).

To reset at a slower cruising speed, use one of the following methods:

- Lightly tap the brake pedal. When the vehicle attains the desired speed, push the SET– switch and release it.
- Push and hold the SET– switch. The set vehicle speed will decrease by approximately 10 km/h (10 mph) (for ASR market) and 5 km/h (5 mph) (for all other markets).
- Push, then quickly release the SET– switch. Each time you do this, the set speed will decrease by approximately 1 km/h (1 mph).

To resume the preset speed, push and release the RES+ switch. The vehicle will resume the last set cruising speed when the vehicle speed is over 30 km/h (20 mph).

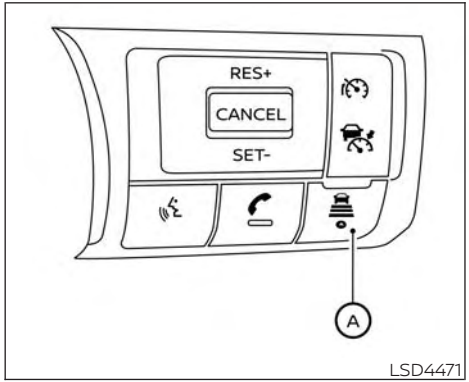

LSD4471

How to change the set distance to the vehicle ahead

The distance to the vehicle ahead can be selected at any time depending on the traffic conditions.

Each time the distance switch Ⓐ is pushed, the set distance will change to long, middle, short and back to long again, in that sequence.

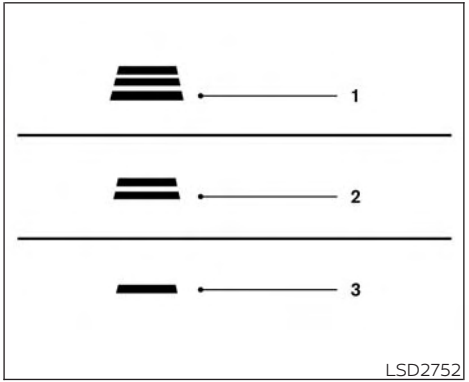

LSD2752

	Distance	Approximate distance at 100 km/h (60 mph) [m (ft)]
1.	Long	60 (200)
2.	Middle	45 (150)
3.	Short	30 (100)

- The distance to the vehicle ahead will change according to the vehicle speed. The higher the vehicle speed, the longer the distance.
- The distance setting will remain at the current setting even if the engine is restarted.

Approach warning

If your vehicle comes closer to the vehicle ahead due to rapid deceleration of that vehicle or if another vehicle cuts in, the system warns the driver with the chime and ICC system display. Decelerate by depressing the brake pedal to maintain a safe vehicle distance if:

- The chime sounds.
- The vehicle ahead detection indicator blinks.

The warning chime may not sound in some cases when there is a short distance between vehicles. Some examples are:

- When the vehicles are traveling at the same speed and the distance between vehicles is not changing.
- When the vehicle ahead is traveling faster and the distance between vehicles is increasing.
- When a vehicle cuts in near your vehicle.

The warning chime will not sound when:

- The vehicle approaches other vehicles that are parked or moving slowly.
- The accelerator pedal is depressed, overriding the system.

NOTE:

The approach warning chime may sound and the system display may blink when the ICC sensor detects objects on the side of the vehicle or on the side of the road. This may cause the ICC system to decelerate or accelerate the vehicle. The ICC sensor may detect these objects when the vehicle is driven on winding roads, narrow roads, hilly roads, or when entering or exiting a curve. In these cases you will have to manually control the proper distance ahead of your vehicle.

Also, the sensor sensitivity can be affected by vehicle operation (steering maneuver or driving position in the lane) or traffic or vehicle condition (for example, if a vehicle is being driven with some damage).

Automatic cancellation

A chime sounds under the following conditions and the control is automatically canceled:

- When the vehicle ahead is not detected and your vehicle is traveling below the speed of 24 km/h (15 mph)
- When the system judges the vehicle is at a standstill
- When the shift lever is not in the D (Drive) position or Manual mode
- When the electronic parking brake system is applied
- When the VDC or ESP system is turned off
- When VDC or ESP operates
- When distance measurement becomes impaired due to adhesion of dirt or obstruction to the sensor
- When a wheel slips
- When the radar signal is temporarily interrupted

VEHICLE-TO-VEHICLE DISTANCE CONTROL MODE LIMITATIONS

⚠WARNING

Listed below are the system limitations for the ICC system. Failure to operate the vehicle in accordance with these system limitations could result in serious injury or death.

- **The ICC system is primarily intended for use on straight, dry, open roads with light traffic. It is not advisable to use the ICC system in city traffic or congested areas.**
- **The ICC system will not adapt automatically to road conditions. This system should be used in evenly flowing traffic. Do not use the system on roads with sharp curves, or on icy roads, in heavy rain or in fog.**
- **As there is a performance limit to the distance control function, never rely solely on the ICC system. This system does not correct careless, inattentive or absentminded driving, or overcome poor visibility in rain, fog, or other bad weather. Decelerate the vehicle speed by depressing the brake pedal, depending on the distance to the vehicle ahead and the surrounding circumstances in order to maintain a safe distance between vehicles.**
- **If the vehicle ahead comes to a stop, the vehicle decelerates to a standstill within the limitations of the system. The system will cancel once it judges that the vehicle has come to a standstill and sound a warning chime. To prevent the vehicle from moving, the driver must depress the brake pedal.**

- **Always pay attention to the operation of the vehicle and be ready to manually control the proper following distance. The ICC system may not be able to maintain the selected distance between vehicles (following distance) or selected vehicle speed under some circumstances.**
- **The system may not detect the vehicle in front of you in certain road or weather conditions. To avoid accidents, never use the ICC system under the following conditions:**
  - **On roads where the traffic is heavy or there are sharp curves**
  - **On slippery road surfaces such as on ice or snow, etc.**
  - **During bad weather (rain, fog, snow, etc.)**
  - **When rain, snow or dirt adhere to the bumper around the distance sensor**
  - **On steep downhill roads (the vehicle may go beyond the set vehicle speed and frequent braking may result in overheating the brakes)**
  - **On repeated uphill and downhill roads**
  - **When traffic conditions make it difficult to keep a proper distance between vehicles because of frequent acceleration or deceleration**
  - **Interference by other radar sources**
- **Do not use the ICC system if you are towing a trailer. The system may not detect a vehicle ahead.**
- **In some road or traffic conditions, a vehicle or object can unexpectedly come into the sensor detection zone and cause automatic braking. Always stay alert and avoid using the ICC system where not recommended in this warning section.**

The radar sensor will not detect the following objects:

- Stationary and slow moving vehicles
- Pedestrians or objects in the roadway
- Oncoming vehicles in the same lane
- Motorcycles traveling offset in the travel lane

The sensor generally detects the signals returned from the vehicle ahead. Therefore, if the sensor cannot detect the reflection from the vehicle ahead, the ICC system may not maintain the selected distance.

The following are some conditions in which the sensor cannot properly detect a vehicle ahead and the system may not operate properly:

- When snow or road spray from traveling vehicles reduces the sensor's detection.
- When your vehicle is towing a trailer, etc.
- When excessively heavy baggage is loaded in the rear seat or cargo area of your vehicle.

The ICC system is designed to automatically check the sensor's operation within the limitations of the system.

When the sensor is covered with dirt or is obstructed, the system will automatically be canceled. If the sensor is covered with ice, a transparent or translucent vinyl bag, etc., the ICC system may not detect them. In these instances, the vehicle-to-vehicle distance control mode may not cancel and may not be able to maintain the selected following distance from the vehicle ahead. Be sure to check and clean the sensor regularly.

The detection zone of the radar sensor is limited. A vehicle ahead must be in the detection zone for the vehicle-to-vehicle distance detection mode to maintain the selected distance from the vehicle ahead.

A vehicle ahead may move outside of the detection zone due to its position within the same lane of travel. Motorcycles may not be detected in the same lane ahead if they are traveling offset from the centerline of the lane. A vehicle that is entering the lane ahead may not be detected until the vehicle has completely moved into the lane.

If this occurs, the ICC system may warn you by blinking the system indicator and sounding the chime. The driver may have to manually control the proper distance away from vehicle traveling ahead.

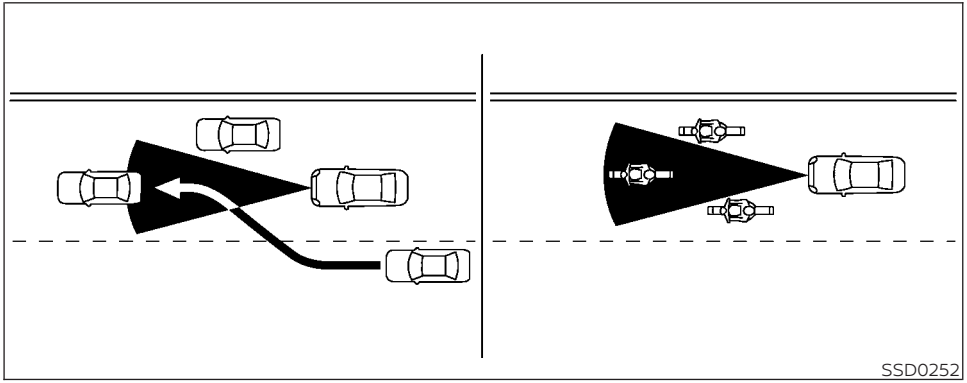
SSD0252

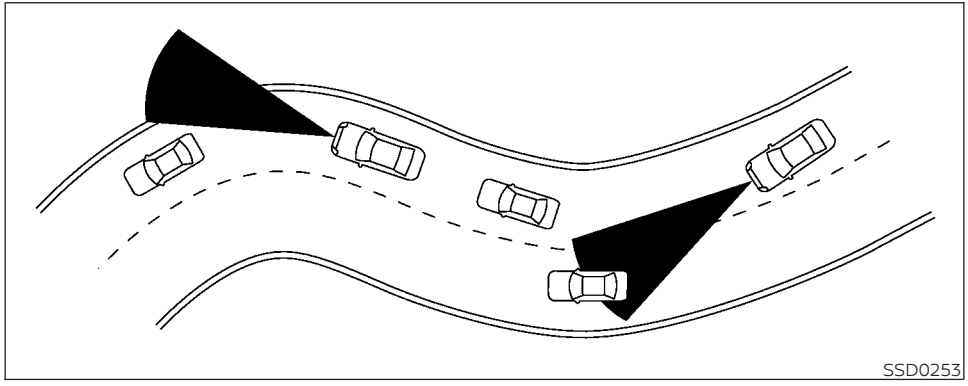

When driving on some roads, such as winding, hilly, curved, narrow roads, or roads which are under construction, the radar sensor may detect vehicles in a different lane, or may temporarily not detect a vehicle traveling ahead. This may cause the radar system to decelerate or accelerate the vehicle.

The detection of vehicles may also be affected by vehicle operation (steering maneuver or traveling position in the lane, etc.) or vehicle condition.

If this occurs, the ICC system may warn you by blinking the system indicator and sounding the chime unexpectedly. You will have to manually control the proper distance away from the vehicle traveling ahead.

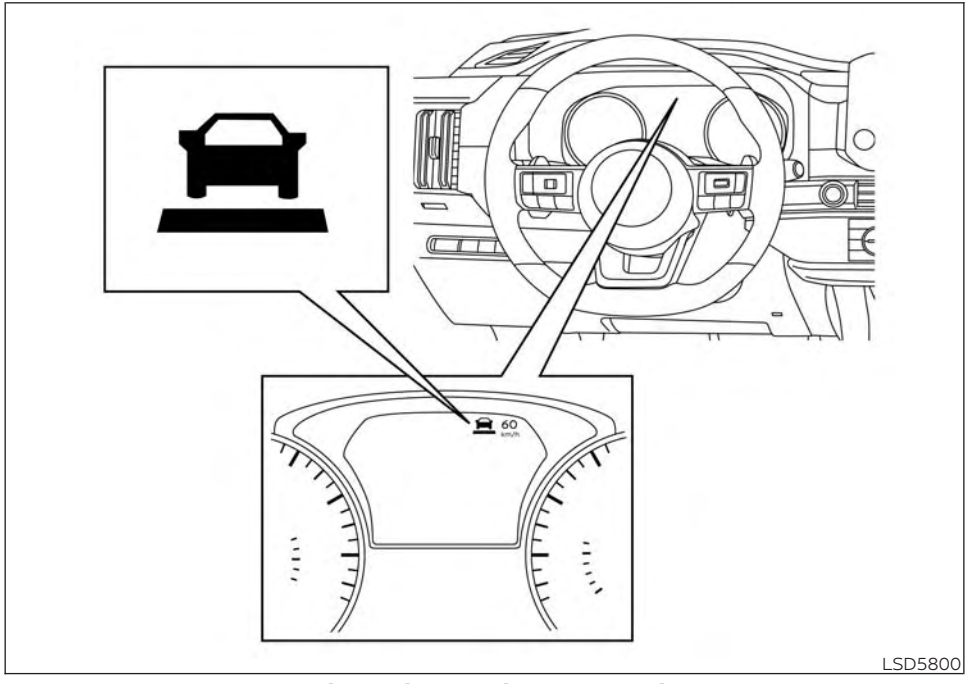

For vehicles with the 7 inch (18 cm) display

SYSTEM TEMPORARILY UNAVAILABLE

The following are conditions in which the ICC system may be temporarily unavailable. In these instances, the ICC system may not cancel and may not be able to maintain the selected following distance from the vehicle ahead.

Condition A

Under the following conditions, the ICC system is automatically canceled. A chime will sound and the system will not be able to be set:

- When the VDC or ESP system is turned off
- When the VDC or ESP operates
- When a vehicle ahead is not detected and your vehicle is traveling below the speed of 24 km/h (15 mph)
- When the system judges the vehicle is at a standstill
- When the shift lever is not in the D (Drive) or Manual mode
- When the electronic parking brake is applied
- When a wheel slips
- When the radar signal is temporarily interrupted

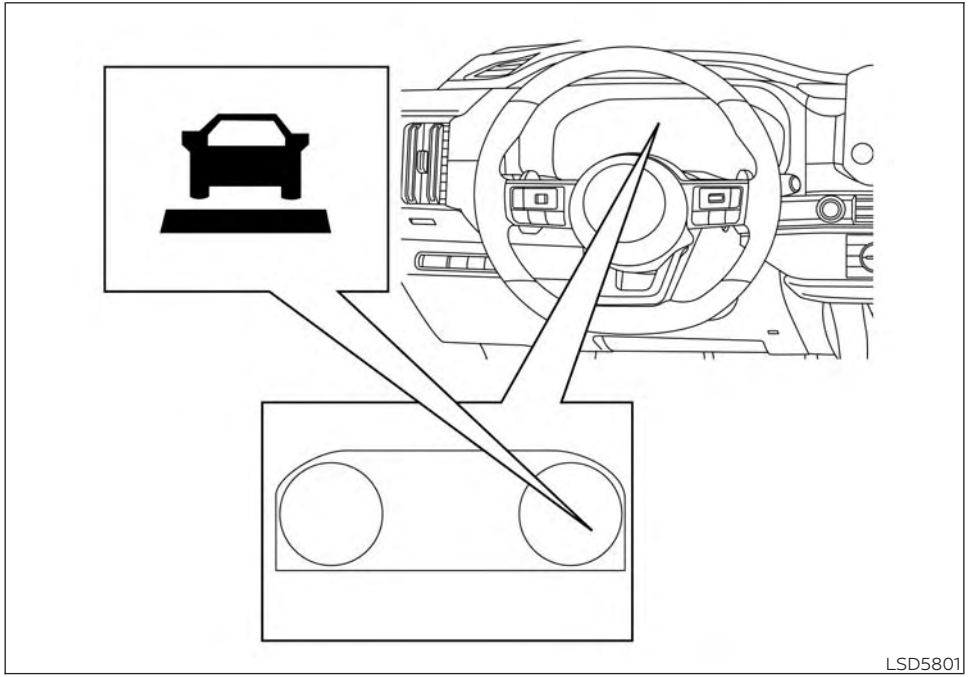

For vehicles with the 12.3 inch (31.2 cm) display

Action to take

When the conditions listed above are no longer present, turn the system off using the ICC switch. Turn the ICC system back on to use the system.

Condition B

When there is inclement weather (rain, fog, snow, etc.) blocking the front radar sensor, the ICC system will automatically be canceled, the chime will sound and the "Forward Driving Aids temporarily disabled Front Sensor blocked See Owner's Manual" or "Temporarily Disabled Front Radar Blocked" warning message will appear in the vehicle information display.

Action to take

When the conditions listed above are no longer present, the warning message will no longer be available in the vehicle information display and the system will operate normally. If the "Forward Driving Aids temporarily disabled Front Sensor blocked See Owner's Manual" or "Temporarily Disabled Front Radar Blocked" warning message continues to be displayed, have the system checked. It is recommended that you visit a NISSAN dealer for this service.

Condition C

When the radar sensor area of the front bumper is covered with mud, dirt, snow, ice, etc., or is obstructed, the ICC system will automatically be canceled.

The chime will sound and the "Forward Driving Aids temporarily disabled Front Sensor blocked See Owner's Manual" or "Temporarily Disabled Front Radar Blocked" warning message will appear in the vehicle information display.

Action to take

If the warning message appears, stop the vehicle in a safe place, press the Park button to place the vehicle in the P (Park) position, and turn the engine off. When the radar signal is temporarily interrupted, clean the sensor area of the front bumper and restart the engine. If the "Forward Driving Aids temporarily disabled Front Sensor blocked See Owner's Manual" or "Temporarily Disabled Front Radar Blocked" warning message continues to be displayed, have the system checked. It is recommended that you visit a NISSAN dealer for this service.

Condition D

When driving on roads with limited road structures or buildings (for example, long bridges, deserts, snow fields, driving next to long walls), the system may illuminate the ICC system warning (yellow) and display the "Forward Driving Aids temporarily disabled Front Sensor blocked See Owner's Manual" or "Temporarily Disabled Front Radar Blocked" message.

Action to take

When the above driving conditions no longer exist, turn the system back on.

Condition E

When the ICC system is not operating properly, a chime sounds and the ICC system warning light (orange) will come on.



LSD4448

Action to take

If the warning light comes on, park the vehicle in a safe place. Turn the engine off, restart the engine, resume driving and set the ICC system again.

If it is not possible to set the system or the indicator stays on, it may indicate that the system is malfunctioning. Although the vehicle is still drivable under normal conditions, have the vehicle checked. It is recommended that you visit a NISSAN dealer for this service.

NOTE:

If the ICC system is temporarily unavailable, the conventional cruise control mode may still be used. For additional information, see "Conventional (fixed speed) cruise control mode" (P. 5-127).

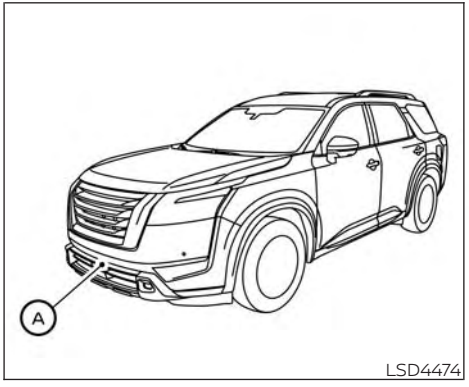

SYSTEM MAINTENANCE

The sensor for the ICC system Ⓐ is located on the front of the vehicle.

To keep the ICC system operating properly, be sure to observe the following:

- Always keep the sensor area of the front bumper/emblem clean
- Do not strike or damage the areas around the sensor.
- Do not attach a sticker (including transparent material) or install an accessory near the sensor. This could cause failure or malfunction.
- Do not attach metallic objects near the sensor area (brush guard, etc.) This could cause failure or malfunction.
- Do not alter, remove, or paint the front bumper. Before customizing or restoring the front bumper, it is recommended that you visit a NISSAN dealer.

Radio frequency statement

For Mexico

La operación de este equipo está sujeta a las siguientes dos condiciones:

1. es posible que este equipo o dispositivo no cause interferencia perjudicial y
2. este equipo o dispositivo debe aceptar cualquier interferencia, incluyendo la que pueda causar su operación no deseada.

For United Arabian Emirates (AGCC), Abu Dhabi, Dubai, Sharjah, Ras al-Khaimah, Umm al-Qawain, Ajman and Fujairah

ER66978/18



For Australia

CONVENTIONAL (fixed speed) CRUISE CONTROL MODE

This mode allows driving at a speed between 40 to 207 km/h (25 to 128 mph) without keeping your foot on the accelerator pedal.

⚠WARNING

- **In the conventional (fixed speed) cruise control mode, a warning chime does not sound to warn you if you are too close to the vehicle ahead, as neither the presence of the vehicle ahead nor the vehicle-to-vehicle distance is detected.**
- **Pay special attention to the distance between your vehicle and the vehicle ahead of you or a collision could occur.**
- **Always confirm the setting in the ICC system display.**
- **Do not use the conventional (fixed speed) cruise control mode when driving under the following conditions:**
  - **When it is not possible to keep the vehicle at a set speed**
  - **In heavy traffic or in traffic that varies in speed**
  - **On winding or hilly roads**
  - **On slippery roads (rain, snow, ice, etc.)**
  - **In very windy areas**
- **Doing so could cause a loss of vehicle control and result in an accident.**

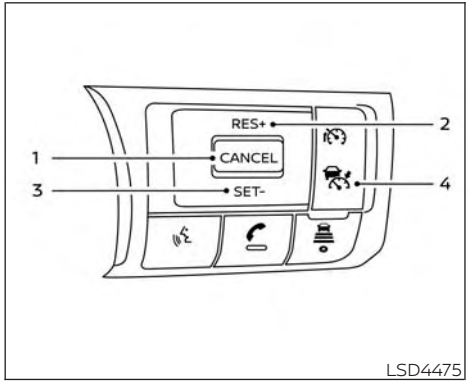

LSD4475

Conventional (fixed speed) cruise control switches

1. CANCEL switch:
   Deactivates the system without erasing the set speed
2. RES+ switch:
   Resumes set speed or increases speed incrementally
3. SET- switch:
   Sets desired cruise speed or reduces speed incrementally
4. ICC switch:
   Master switch to activate the system

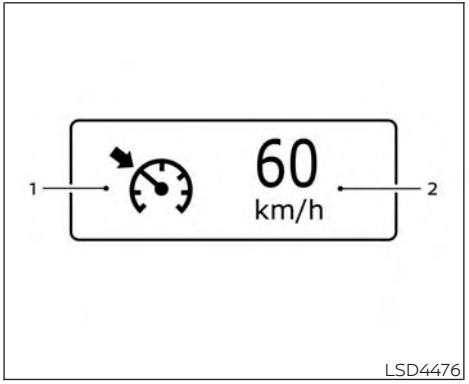

LSD4476

Conventional (fixed speed) cruise control mode display and indicators

The display is located in the vehicle information display.

1. Cruise indicator:
   This indicator indicates the condition of the ICC system depending on a color.
   - Cruise control ON indicator (gray): Indicates that the ICC switch is on
   - Cruise control SET indicator (green): Indicates that the cruising speed is set
   - Cruise control warning (yellow): Indicates that there is a malfunction in the ICC system
2. Set vehicle speed indicator:
   This indicator indicates the set vehicle speed.

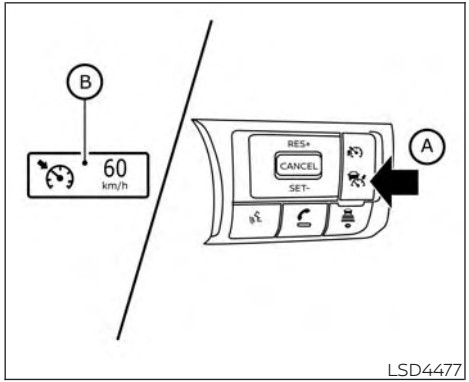

LSD4477

Operating conventional (fixed speed) cruise control mode

To turn on the conventional (fixed speed) cruise control mode, push and hold the ICC switch Ⓐ for longer than about 1.5 seconds.

When pushing ICC switch on, the conventional (fixed speed) cruise control mode display and indicators Ⓑ are displayed in the vehicle information display. After you hold ICC switch on for longer than about 1.5 seconds, the ICC system display turns off. The cruise indicator appears. You can now set your desired cruising speed. Pushing the ICC switch again will turn the system completely off. When the ignition switch is placed in the OFF position, the system is also automatically turned off.

To use the ICC system again, quickly push and release the ICC switch (vehicle-to vehicle distance control mode) or push and hold it (conventional cruise control mode) again to turn it on.

⚠ CAUTION

To avoid accidentally engaging cruise control, make sure to turn the ICC switch off when not using the ICC system.

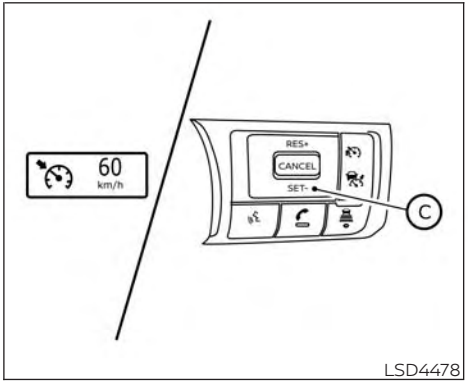

LSD4478

To set cruising speed, accelerate your vehicle to the desired speed, push the SET- Ⓒ switch and release it. (The color of the cruise indicator changes to green and set vehicle speed indicator comes on.) Take your foot off the accelerator pedal. Your vehicle will maintain the set speed.

- To pass another vehicle, depress the accelerator pedal. When you release the pedal, the vehicle will return to the previously set speed.
- The vehicle may not maintain the set speed when going up or down steep hills. If this happens, manually maintain vehicle speed.

To cancel the preset speed, use any of the following methods:

1. Push the CANCEL switch. The vehicle speed indicator will turn off.
2. Tap the brake pedal. The vehicle speed indicator will turn off.
3. Turn the ICC switch off. Both the cruise indicator and vehicle speed indicator will turn off.

To reset at a faster cruising speed, use one of the following three methods:

1. Depress the accelerator pedal. When the vehicle attains the desired speed, push and release the SET- switch.
2. Push and hold the RES+ switch. When the vehicle attains the desired speed, release the switch.
3. Push, then quickly release the RES+ switch. Each time you do this, the set speed will increase by about 1.6 km/h (1 mph).

To reset at a slower cruising speed, use one of the following three methods:

1. Lightly tap the brake pedal. When the vehicle attains the desired speed, push the SET- switch and release it.
2. Push and hold the SET- switch. Release the switch when the vehicle slows down to the desired speed.
3. Push, then quickly release the SET- switch. Each time you do this, the set speed will decrease by about 1.6 km/h (1 mph).

To resume the preset speed, push and release the RES+ switch. The vehicle will resume the last set cruising speed when the vehicle speed is over 40 km/h (25 mph).

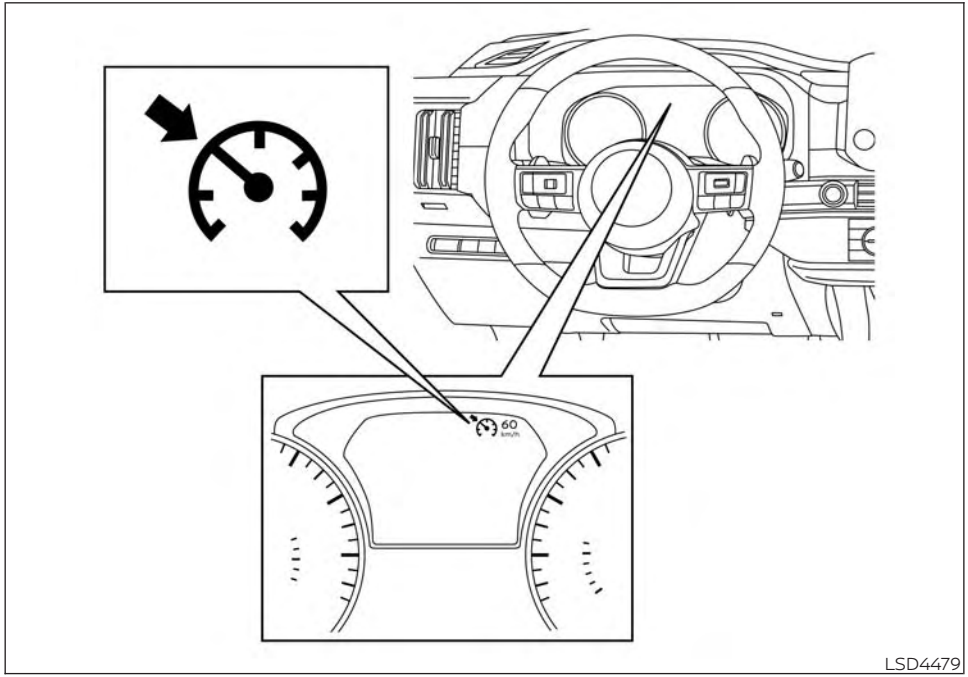

For vehicles with the 7 inch (18 cm) display

System temporarily unavailable

A chime sounds under the following conditions and the control is automatically canceled:

- When the vehicle slows down more than 13 km/h (8 mph) below the set speed
- When the shift lever is not in the D (Drive) or manual shift mode
- When the electronic parking brake is applied
- When the VDC or ESP operates (including the traction control system)
- When a wheel slips

When the system is not operating properly, the chime sounds and the color of the cruise indicator will change to orange.

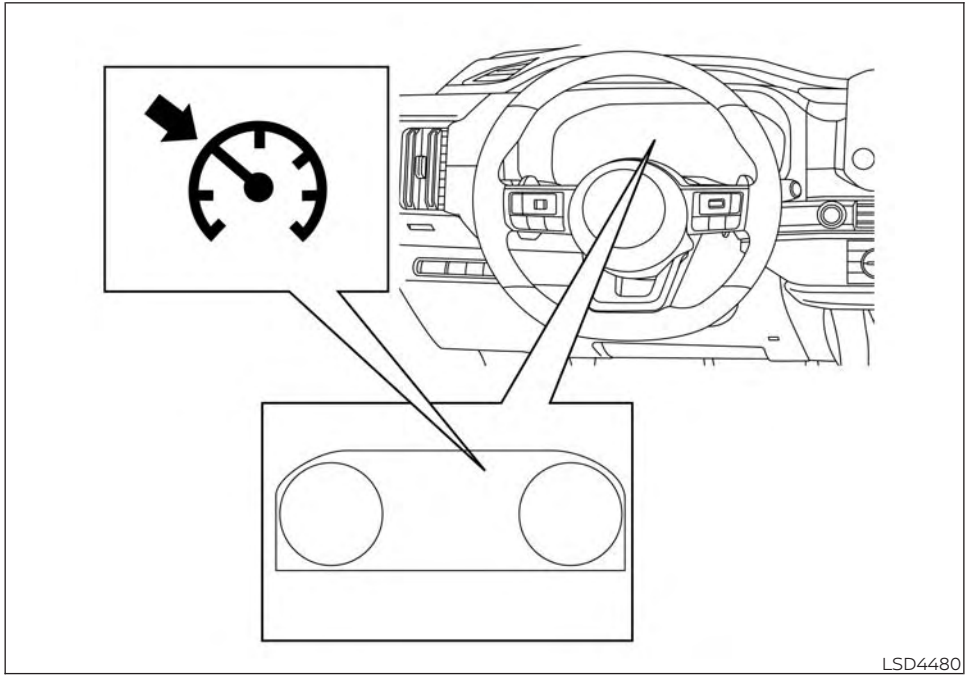

For vehicles with the 12.3 inch (31.2 cm) display

Action to take

If the color of the cruise indicator changes to orange, stop the vehicle in a safe place and press the Park button to place the vehicle in the P (Park) position. Turn the engine off, restart the engine, resume driving, and then perform the setting again.

If it is not possible to set or the indicator stays on, it may indicate that the system is malfunctioning. Although the vehicle is still drivable under normal conditions, have the vehicle checked. It is recommended that you visit a NISSAN dealer for this service.

⚠ WARNING

Failure to follow the warnings and instructions for proper use of the ProPILOT Assist system could result in serious injury or death.

- **ProPILOT Assist is not a self-driving system. Within the limits of its capabilities, as described in this manual, it helps the driver with certain driving activities.**
- **The ProPILOT Assist system is not a replacement for proper driving procedures and is not designed to correct careless, inattentive or absent-minded driving. ProPILOT Assist will not always steer the vehicle to keep it in the lane. The ProPILOT Assist system is not designed to prevent loss of control. It is the driver's responsibility to stay alert, drive safely, keep the vehicle in the traveling lane, and be in control of the vehicle at all times.**
- **There are limitations to the ProPILOT Assist system capability. The ProPILOT Assist system does not function in all driving, traffic, weather, and road conditions. It is the driver's responsibility to stay alert, drive safely, keep the vehicle in the traveling lane, and be in control of the vehicle at all times.**
- **The ProPILOT Assist system is only an aid to assist the driver and is not a collision warning or avoidance device.**
- **The ProPILOT Assist system is for highway use only and is not intended for city driving. Failure to apply the brakes or steer the vehicle when necessary may result in a serious accident.**
- **Always observe posted speed limits and do not set the speed over them.**
- **Never take your hands off the steering wheel when driving. Always keep your hands on the steering wheel and drive your vehicle safely.**
- **Never unfasten your safety belt when using ProPILOT Assist. Doing so automatically cancels the ProPILOT Assist system.**
- **The ProPILOT Assist system does not react to stationary and slow moving vehicles.**
- **Always drive carefully and attentively when using the ProPILOT Assist system. Read and understand the Owner's Manual thoroughly before using the ProPILOT Assist system. To avoid serious injury or death, do not rely on the system to prevent accidents or to control the vehicle's speed in emergency situations. Do not use the ProPILOT Assist system except in appropriate road and traffic conditions.**

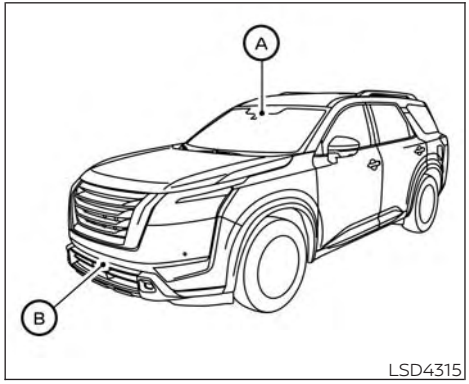

The ProPILOT Assist system is intended to enhance the operation of the vehicle when following a vehicle traveling in the same lane and direction.

The ProPILOT Assist system uses a multi-sensing front camera Ⓐ installed behind the windshield and a radar sensor located on the front of the vehicle Ⓑ to measure the distance to the vehicle ahead in the same lane and to monitor the lane markers. If the vehicle detects a slower moving vehicle ahead, the system will reduce the vehicle speed so that your vehicle follows the vehicle in front at the selected distance. The system will also help keep the vehicle centered in the traveling lane when clear lane markings are detected.

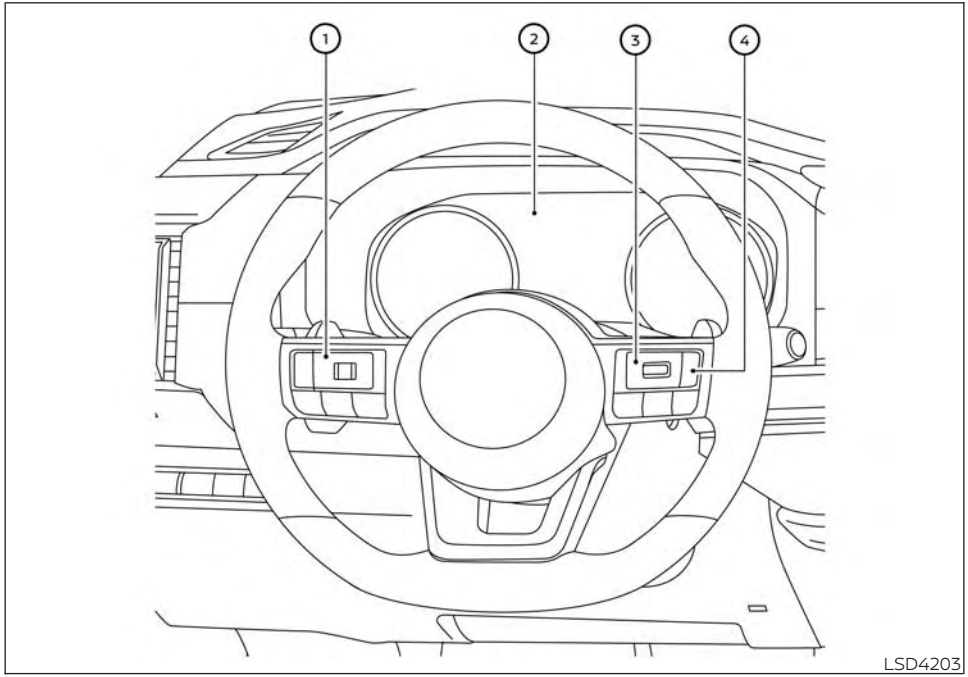

For vehicles with the 7 inch (18 cm) display

PROPILOT ASSIST SYSTEM OPERATION

① Steering-wheel-mounted control (left)

② Vehicle information display

③ Steering-wheel-mounted control (right)

④ ProPILOT Assist switch

The ProPILOT Assist system has the following two functions:

1. **Intelligent Cruise Control (ICC)**

   The ICC system can be set to one of two cruise control modes:

- **Conventional (fixed speed) cruise control mode:** For cruising at a preset speed

NOTE:
Steering Assist is not available in the conventional (fixed speed) cruise control mode.

- **Vehicle-to-vehicle distance control mode:** The ICC system maintains a selected distance from the vehicle in front of you within the speed range of 0 to 144 km/h (0 to 90 mph) up to the set speed. The set speed can be selected by the driver between 32 to 144 km/h (20 to 90 mph). When the vehicle ahead slows to a stop, your vehicle gradually decelerates to a standstill. When the vehicle is stopped, the ICC system maintains braking force to keep your vehicle stopped.

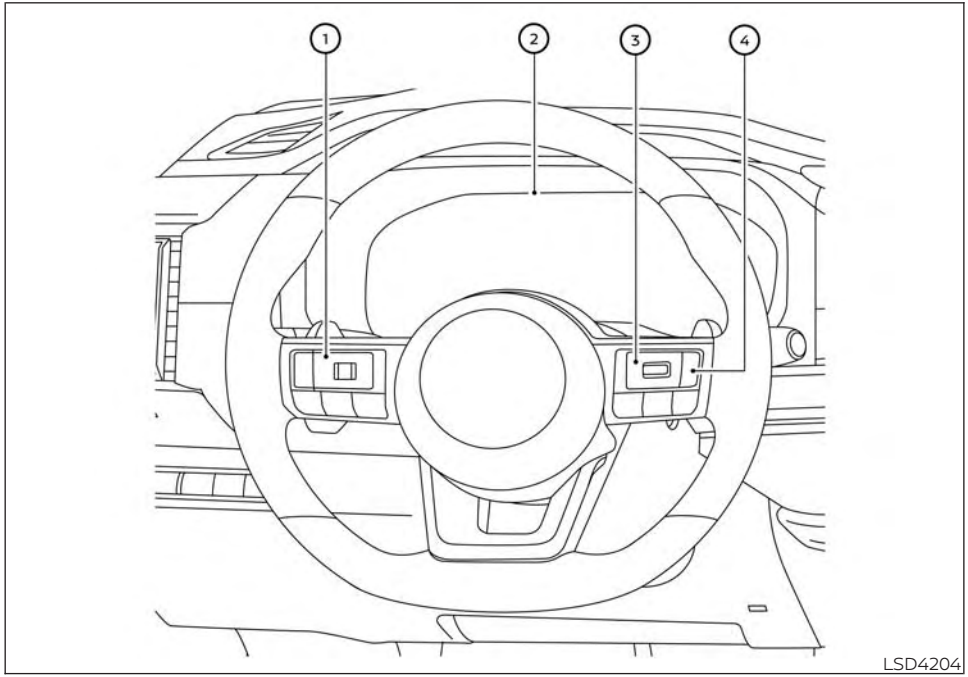

For vehicles with the 12.3 inch (31.2 cm) display

NOTE:
When your vehicle is stopped for less than 3 seconds and the vehicle ahead begins to move, your vehicle will start moving again automatically.

- **When your vehicle is at a standstill for more than 3 seconds and the vehicle ahead begins to accelerate, push the RES+ switch or lightly depress the accelerator pedal. The ICC system starts to follow the vehicle ahead.**
- **When no vehicle is detected ahead within the driver selected distance, the vehicle travels at the speed set by the driver. The speed must be above 32 km/h (20 mph) to use this function.**

NOTE:
Even if the Intelligent Emergency Braking with Pedestrian Detection setting is turned off by the driver using the "Settings" menu in the vehicle information display, Intelligent Emergency Braking with Pedestrian Detection will be automatically turned on when ICC is used.

2. **Steering Assist**

The Steering Assist function controls the steering system to help keep your vehicle within the traveling lane.

When there is no vehicle ahead, Steering Assist is not available at speeds under 60 km/h (37 mph).

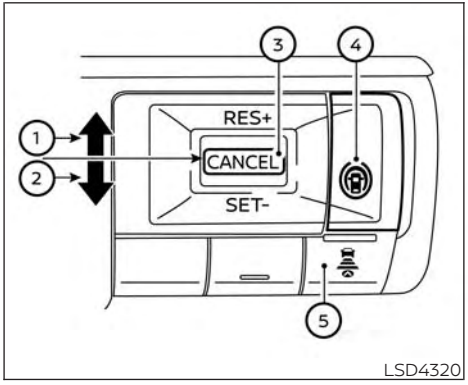

ProPILOT Assist switches

① **RES+ switch:**

Resumes set speed or increases speed incrementally

② **SET- switch:**

Sets desired cruise speed or reduces speed incrementally

③ **CANCEL switch:**

Deactivates the ProPILOT Assist system

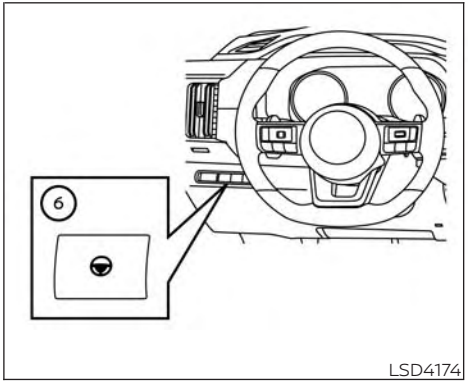

For vehicles with the 7 inch (18 cm) display

④ **ProPILOT Assist switch:**

Turns the ProPILOT Assist system on or off

⑤ **DISTANCE switch:**

- Long
- Middle
- Short

⑥ **Steering Assist switch:**

Turns the Steering Assist function on or off

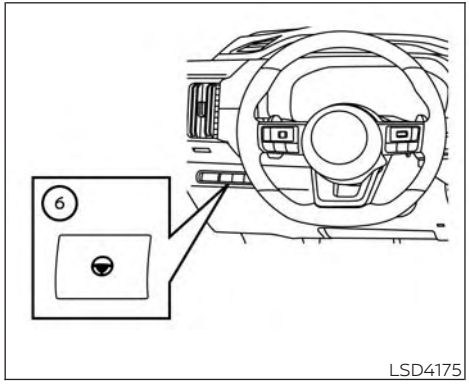

For vehicles with the 12.3 inch (31.2 cm) display

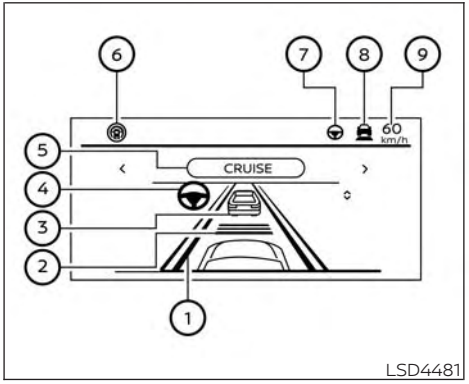

For vehicles with the 7 inch (18 cm) display

The ProPILOT Assist system display and indicators

① Lane marker indicator

Indicates whether the system detects lane markers

- No lane markers displayed: Steering Assist is turned off
- Lane marker indicator (gray): No lane markers detected

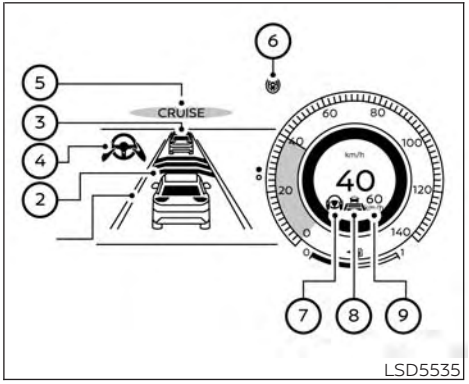

For vehicles with the 12.3 inch (31.2 cm) display

- Lane marker indicator (green): Lane markers detected
- Lane marker indicator (yellow): Lane departure is detected

② Set distance indicator

Displays the selected distance

③ Vehicle ahead detection indicator

Indicates whether the system detects a vehicle in front of you

④ **Steering Assist indicator**

Indicates the status of the Steering Assist function by the color of the indicator

- Steering Assist indicator (gray): Steering Assist standby
- Steering Assist indicator (green): Steering Assist active
- Steering Assist indicator (orange): Steering Assist malfunction

⑤ **ProPILOT Assist activation**

Displays once the ProPILOT Assist system is activated

⑥ **ProPILOT Assist status indicator**

Indicates the status of the ProPILOT Assist system by the color of the indicator

- ProPILOT Assist status indicator (white): ProPILOT Assist is on but in standby.
- ProPILOT Assist status indicator (blue): ProPILOT Assist active

⑦ **Steering Assist status indicator/ warning**

Displays the status of the Steering Assist by the color of the indicator/warning

- No Steering Assist status indicator displayed: Steering Assist is turned off
- Steering Assist indicator (gray): Steering Assist standby
- Steering Assist indicator (green): Steering Assist active
- Steering Assist indicator (yellow): Steering Assist malfunction

⑧ **Speed control status indicator/ warning** Displays the status of speed control by the color and shape of the indicator/warning

- Speed control status indicator/ warning (gray): ICC standby
- Speed control status indicator/ warning (solid green ): ICC (distance control mode) is active (vehicle detected ahead). Your vehicle matches the speed of the vehicle ahead.
- Speed control status indicator/ warning (green outline ): ICC (maintain speed control mode) is active (no vehicle detected ahead). Your vehicle maintains the driver-selected set speed.
- Speed control status indicator/ warning (orange): Indicates an ICC malfunction

⑨ **Set vehicle speed indicator**

Indicates the set vehicle speed

TURNING THE CONVENTIONAL (fixed speed) CRUISE CONTROL MODE ON

NOTE:

ProPILOT Assist provides no approach warnings, automatic braking, or steering assist in the conventional (fixed speed) cruise control mode.

To choose the conventional (fixed speed) cruise control mode, push and hold the ProPILOT Assist switch for longer than approximately 1.5 seconds. For additional information, see "Conventional (fixed speed) cruise control mode" (P. 5-168).

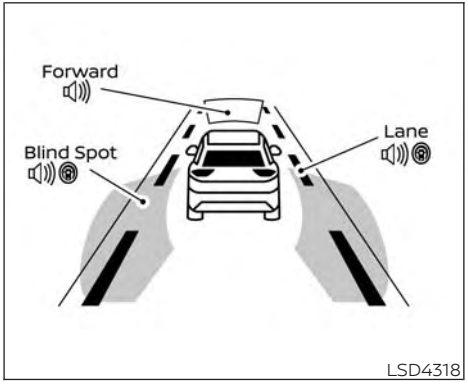

Example (all enabled)

OPERATING PROPILOT ASSIST

When the driving aids are enabled:

Zone	Driving Aid	Display
Forward	Intelligent Emergency Braking with Pedestrian Detection	Outline
	Intelligent Forward Collision Warning	
Lane	Lane Departure Warning (LDW)	Outline
	Intelligent Lane Intervention	Shaded
Blind Spot	Blind Spot Warning (BSW)	Outline
	Intelligent Blind Spot Intervention	Shaded

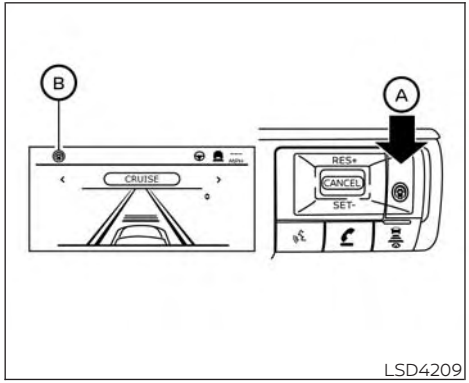

For vehicles with the 7 inch (18 cm) display

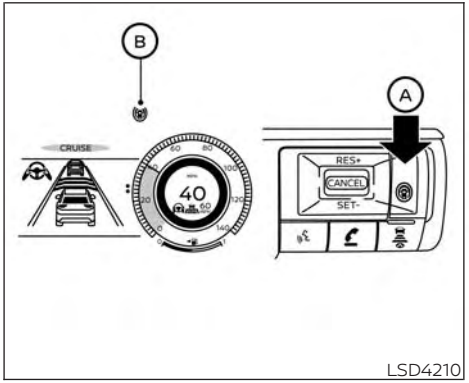

For vehicles with the 12.3 inch (31.2 cm) display

1. Push the ProPILOT Assist switch Ⓐ. This turns on the ProPILOT Assist system.
   - The ProPILOT Assist status indicator Ⓑ illuminates in white.
2. A screen is displayed for a period of time that indicates the status of the driving aid functions.

- When any of the "Warning" systems are enabled, the " " is shown in each zone.
- When any of the "Intervention" systems are enabled, the " " mark is shown in each zone.
- When no system is enabled, "OFF" is shown in each zone.

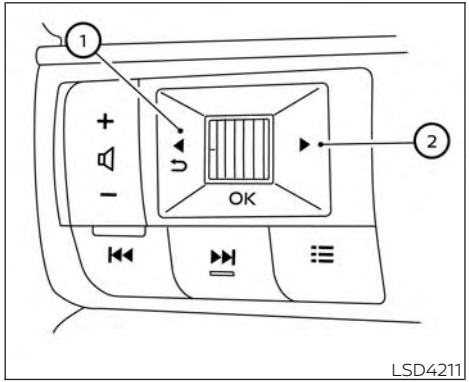

LSD4211

To change the status of the driving aids, use the ① ◄ or ② ► button to navigate the settings screen. For additional information, see "How to use the vehicle information display" (P. 2-24) or (P. 2-49).

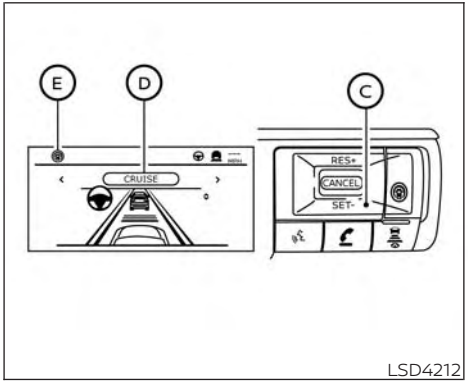

LSD4212

For vehicles with the 7 inch (18 cm) display

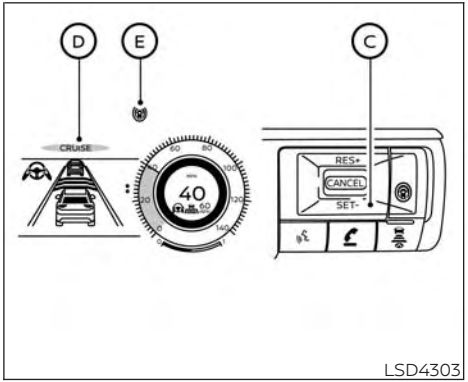

LSD4303

For vehicles with the 12.3 inch (31.2 cm) display

3. Accelerate or decelerate your vehicle to the desired speed and push down the SET- switch Ⓒ.
4. The ProPILOT Assist system begins to automatically maintain the set speed. The ProPILOT Assist activation indicator Ⓓ and ProPILOT Assist status indicator Ⓔ illuminate (blue). When a vehicle ahead is traveling at a speed of 32 km/h (20 mph) or below and the SET- switch is pushed, the set speed of your vehicle is 32 km/h (20 mph).

NOTE:

When the Intelligent Lane Intervention and Intelligent Blind Spot Intervention systems are enabled in the settings menu of the vehicle information display, turning the ProPILOT Assist system on will turn on the Intelligent Lane Intervention and Intelligent Blind Spot Intervention systems at the same time. If the Intelligent Lane Intervention system is disabled in the settings menu, the Intelligent Lane Intervention system will automatically be turned on when the Steering Assist system is active. For additional information, see "Intelligent Lane Intervention" (P. 5-46) and "Intelligent Blind Spot Intervention" (P. 5-76).

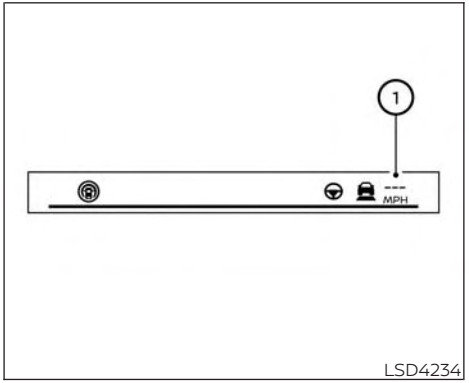

For vehicles with the 7 inch (18 cm) display

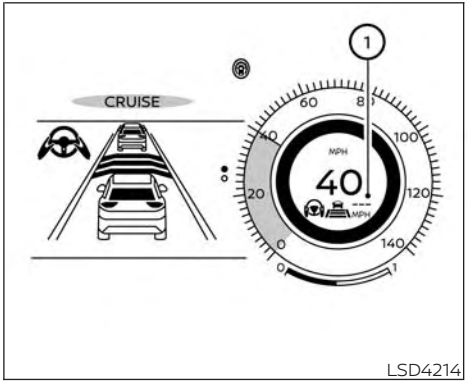

For vehicles with the 12.3 inch (31.2 cm) display

When the SET- switch is pushed under the following conditions, the ProPILOT Assist system cannot be set and the set vehicle speed indicator ① blinks for approximately 2 seconds:

- When traveling below 32 km/h (20 mph) and the vehicle ahead is not detected
- When the shift lever is not in the D (Drive) position or manual shift mode
- When the parking brake is applied

- When the brakes are operated by the driver
- When the VDC or ESP system is off. For additional information, see "Vehicle Dynamic Control (VDC) or Electronic Stability Program (ESP) system" (P. 5-232).
- When the VDC or ESP system (including the traction control system) is operating
- When a wheel is slipping
- When any door is open
- When the driver's seat belt is not fastened
- When the SNOW mode, or MUD/RUT or SAND modes (4WD models) are selected

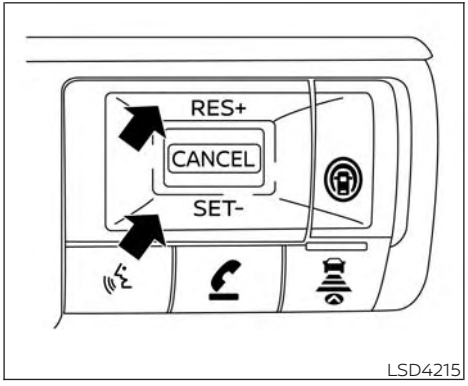

LSD4215

How to change the set vehicle speed

The set vehicle speed can be adjusted.

To change to a faster cruising speed:

- Push and hold the RES+ switch. The set vehicle speed increases by approximately 5 km/h (5 mph).
- Push, then quickly release, the RES+ switch. Each time you do this, the set speed increases by approximately 1 km/h (1 mph).

To change to a slower cruising speed:

- Push and hold the SET- switch. The set vehicle speed decreases by approximately 5 km/h (5 mph).
- Push, then quickly release, the SET- switch. Each time you do this, the set speed decreases by approximately 1 km/h (1 mph).

How to momentarily accelerate or decelerate

- Depress the accelerator pedal when acceleration is required. Release the accelerator pedal to resume the previously set vehicle speed.
- Depress the brake pedal when deceleration is required. Control by the ProPILOT Assist system is canceled. Push the RES+ switch to resume the previously set vehicle speed.

⚠ WARNING

When the accelerator pedal is depressed and you are approaching the vehicle ahead, the ICC system will neither control the brake nor warn the driver with the chime and display. The driver must manually control the vehicle speed to maintain a safe distance to the vehicle ahead. Failure to do so could result in severe personal injury or death.

NOTE:

When you accelerate by depressing the accelerator pedal or decelerate by pushing the SET- switch and the vehicle travels faster than the speed set by the driver, the set speed vehicle indicator will blink.

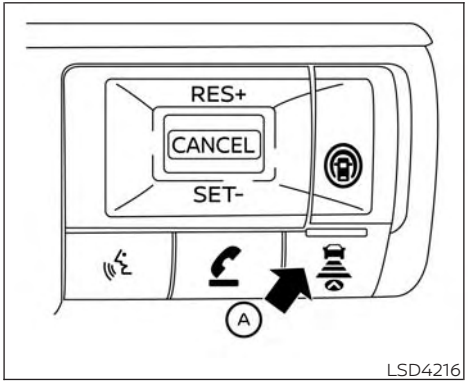

How to change the set distance to the vehicle ahead

The distance to the vehicle ahead can be selected at any time.

Each time the DISTANCE switch Ⓐ is pushed, the set distance will change to long, middle, short and back to long again in that sequence.

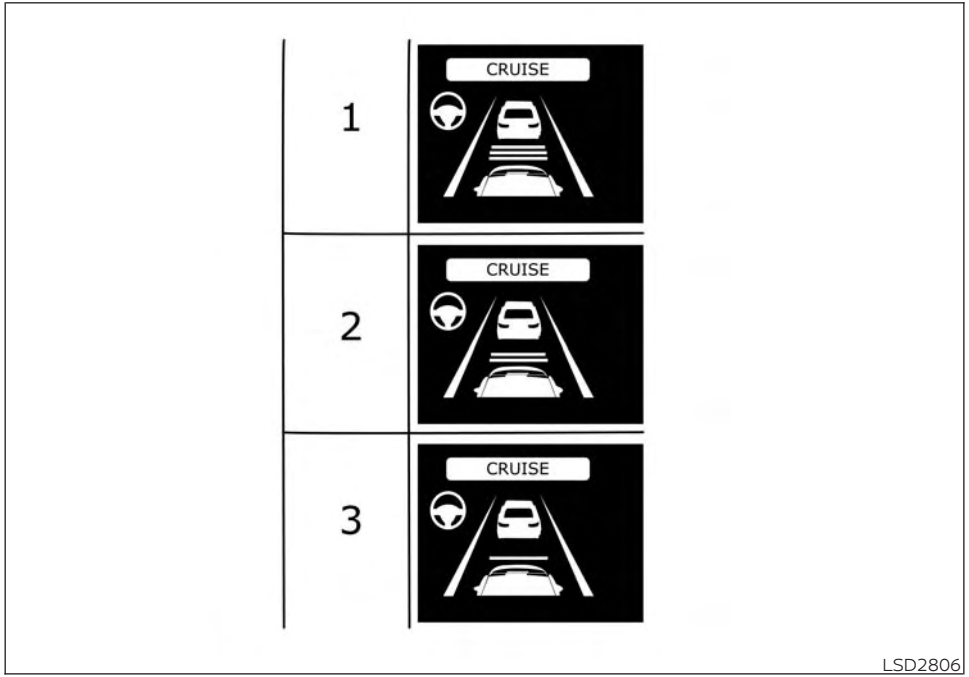

	Distance	Approximate distance at 100 km/h (60 mph) [m (ft)]
1.	Long	60 (200)
2.	Middle	45 (150)
3.	Short	30 (90)

- The distance to the vehicle ahead changes automatically according to the vehicle speed. The higher the vehicle speed, the longer the distance.
- The distance setting will remain at the current setting even if the engine is restarted.

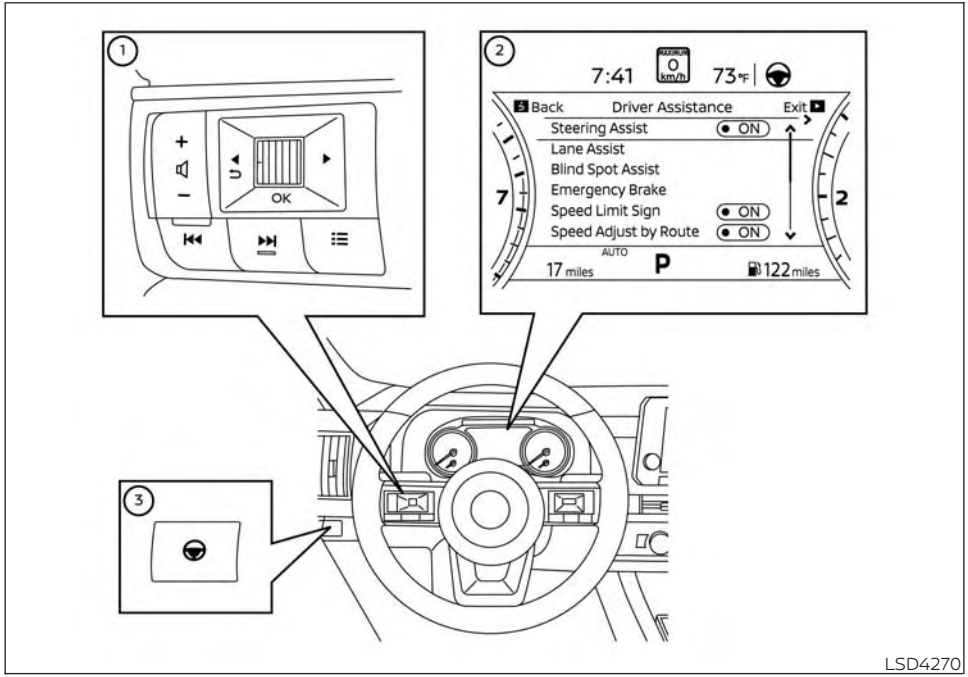

For vehicles with the 7 inch (18 cm) display

HOW TO ENABLE/DISABLE THE STEERING ASSIST

① Steering-wheel-mounted control (left)
② Vehicle information display
③ Steering Assist switch

Use the following methods to enable or disable the Steering Assist.

Steering Assist switch:

To turn the Steering Assist on or off, push the Steering Assist switch ③ on the instrument panel.

NOTE:

- **When the Steering Assist switch is used to turn the system on or off, the system remembers the setting even if the ignition switch is cycled. The switch must be pushed again to change the setting to on or off.**
- **The Steering Assist switch changes the status of the "Steering Assist" selection made in the "Settings" screen in the vehicle information display.**

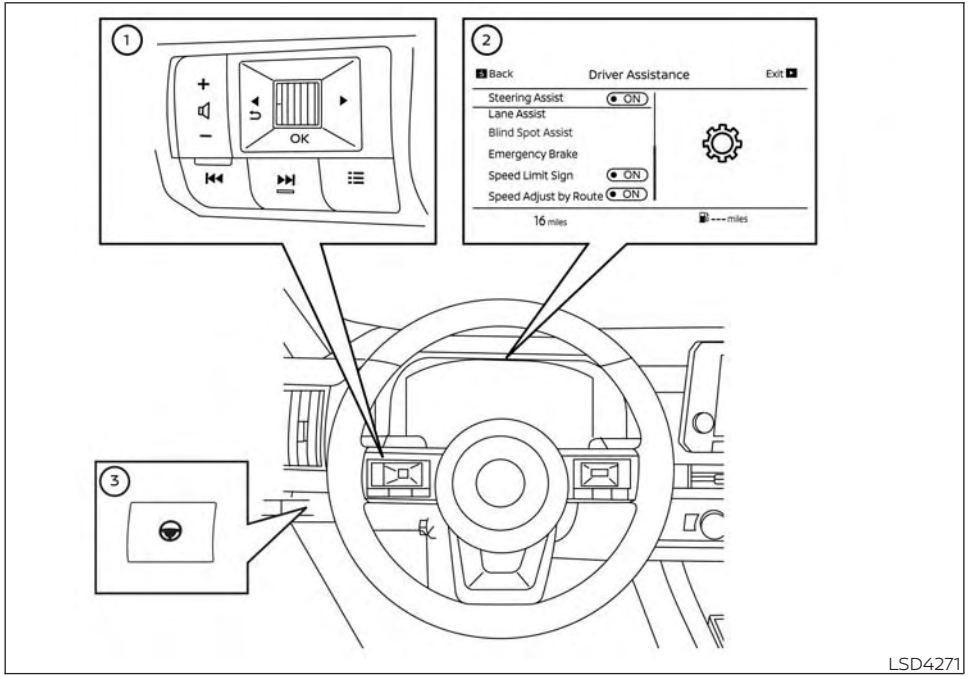

For vehicles with the 12.3 inch (31.2 cm) display

Setting in the vehicle information display:

1. Press the ◀▶ button on the steering wheel ① until "Settings" displays in the vehicle information display ②.
2. Use the scroll dial ① to select "Driver Assistance." Then press the OK button ①.
3. Use the scroll dial ① to select "Steering Assist" and then press the OK button ① to turn the system on or off.

NOTE:

- **When the Cruise screen is displayed on the vehicle information display, press the OK button on the steering wheel to call up the "Driving Aids" setting display.**
- **When enabling/disabling the system through the vehicle information display or when pushing the Steering Assist switch, the system retains the current settings even if the engine is restarted.**

How to cancel the ProPILOT Assist system

To cancel the ProPILOT Assist system, use one of the following methods:

- Push the CANCEL switch.
- Tap the brake pedal (except at a standstill).
- Push the ProPILOT Assist switch to turn the system off. The ProPILOT Assist status indicator will go out.

When the ProPILOT Assist system is canceled while the vehicle is stopped, the electronic parking brake is automatically activated.

⚠ WARNING

To prevent the vehicle from moving or rolling unexpectedly, which could result in serious personal injury or property damage, before exiting the vehicle make sure to push the ProPILOT Assist switch to turn the system off, place the shift position in the P (Park) position, and turn the engine off.

INTELLIGENT CRUISE CONTROL (ICC) (for vehicles with ProPILOT Assist)

⚠ WARNING

Failure to follow the warnings and instructions for proper use of the ICC system could result in serious injury or death.

- **The ICC system is only an aid to assist the driver and is not a collision warning or avoidance device. It is recommended for highway use only and it is not intended for city driving. It is the driver's responsibility to stay alert, drive safely, and be in control of the vehicle at all times.**
- **There are limitations to the ICC system capability. The ICC system does not function in all driving, traffic, weather, and road conditions. It is the driver's responsibility to stay alert, drive safely, keep the vehicle in the traveling lane, and be in control of the vehicle at all times.**
- **Always observe posted speed limits and do not set the speed over them.**
- **The ICC system does not react to stationary and slow moving vehicles.**
- **Always drive carefully and attentively when using the ICC system. Read and understand the Owner's Manual thoroughly before using the ICC system. To avoid serious injury or death, do not rely on the system to prevent accidents or to control the vehicle's speed in emergency situations. Do not use the ICC system except in appropriate road and traffic conditions.**

ICC system operation

The ICC system is designed to maintain a selected distance from the vehicle in front of you and can reduce the speed to match a slower vehicle ahead. The system decelerates the vehicle as necessary and if the vehicle ahead comes to a stop, the vehicle decelerates to a standstill. However, the ICC system can only apply up to 40% of the vehicle's total braking power. This system should only be used when traffic conditions allow vehicle speeds to remain fairly constant or when vehicle speeds change gradually. If a vehicle moves into the traveling lane ahead or if a vehicle traveling ahead rapidly decelerates, the distance between vehicles may become closer because the ICC system cannot decelerate

the vehicle quickly enough. If this occurs, the ICC system sounds a warning chime and blinks the system display to notify the driver to take necessary action.

The ICC system cancels and a warning chime sounds if the speed is below approximately 15 mph (24 km/h) and a vehicle is not detected ahead.

The ICC system operates as follows:

- When there are no vehicles traveling ahead, the ICC system maintains the speed set by the driver. The set speed range is between approximately 20 and 90 mph (32 and 144 km/h).
- When there is a vehicle traveling ahead, the ICC system adjusts the speed to maintain the distance, selected by the driver, from the vehicle ahead. If the vehicle ahead comes to a stop, the vehicle decelerates to a standstill. Once your vehicle stops, the ICC system keeps the vehicle stopped.
- When your vehicle is stopped for less than 3 seconds and the vehicle ahead begins to move, your vehicle will start moving again automatically.
- When your vehicle is at a standstill for more than 3 seconds and the vehicle ahead begins to accelerate, push the RES+ switch or lightly depress the accelerator pedal. The ICC system starts to follow the vehicle ahead.
- When the vehicle traveling ahead moves to a different traveling lane, the ICC system accelerates and maintains vehicle speed up to the set speed.

The ICC system does not control vehicle speed or warn you when you approach stationary and slow moving vehicles. You must pay attention to vehicle operation to maintain proper distance from vehicles ahead when approaching toll gates or traffic congestion.

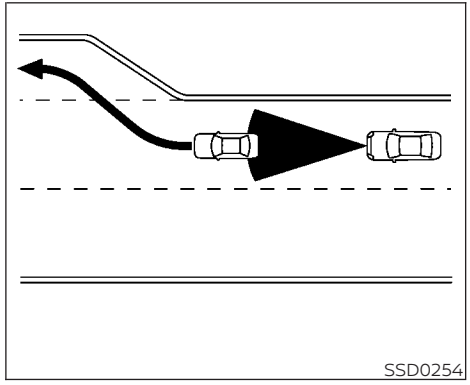

When driving on the freeway at a set speed and approaching a slower traveling vehicle ahead, the ICC system adjusts the speed to maintain the distance, selected by the driver, from the vehicle ahead. If the vehicle ahead changes lanes or exits the freeway, the ICC system accelerates and maintains the speed up to the set speed. Pay attention to the driving operation to maintain control of the vehicle as it accelerates to the set speed.

The vehicle may not maintain the set speed on winding or hilly roads. If this occurs, you will have to manually control the vehicle speed.

Normally when controlling the distance to a vehicle ahead, the system automatically accelerates or decelerates your vehicle according to the speed of the vehicle ahead.

Depress the accelerator to properly accelerate your vehicle when acceleration is required for a lane change. Depress the brake pedal when deceleration is required to maintain a safe distance to the vehicle ahead due to sudden braking or if a vehicle cuts in. Always stay alert when using the ICC system.

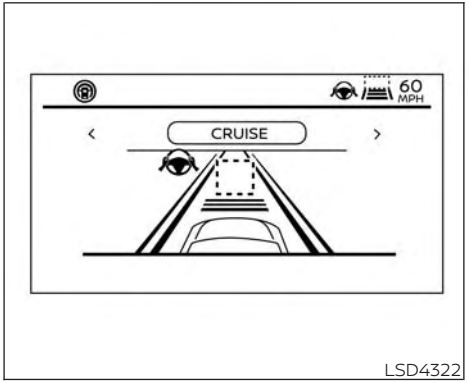

System set display with no vehicle detected ahead (7 inch (18 cm) display)

No vehicle detected ahead

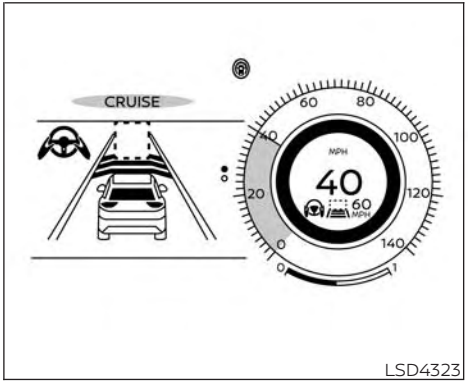

System set display with no vehicle detected ahead (12.3 inch (31.2 cm) display)

The driver sets the desired vehicle speed based on the road conditions. The ICC system maintains the set vehicle speed, similar to standard cruise control, as long as no vehicle is detected in the lane ahead. The ICC system displays the set speed.

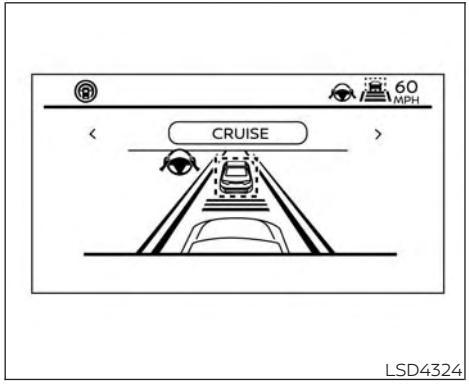

System set display with vehicle ahead (7 inch (18 cm) display)

Vehicle detected ahead

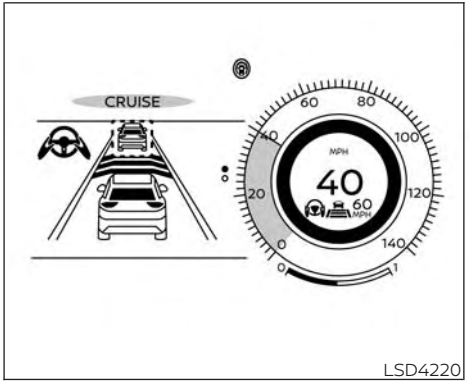

System set display with vehicle ahead (12.3 inch (31.2 cm))

When a vehicle is detected in the lane ahead, the ICC system decelerates the vehicle by controlling the throttle and applying the brakes to match the speed of a slower vehicle ahead. The ICC system then controls the vehicle speed based on the speed of the vehicle ahead to maintain the driver selected distance.

NOTE:

- **The stop lights of the vehicle come on when braking is performed by the ICC system.**
- **When the brake is applied by the system, a noise may be heard. This is not a malfunction.**

When the ICC system detects a vehicle ahead, the vehicle ahead detection indicator and the speed control status indicator (distance control mode) illuminates (solid green).

Vehicle ahead stops

When the vehicle ahead decelerates to stop, your vehicle decelerates to a standstill. Once your vehicle stops, the ICC system automatically applies the brakes to keep the vehicle stopped. When your vehicle is at a standstill, the "(RES+) Press to start" message is displayed on the vehicle information display.

NOTE:

When your vehicle stops for less than 3 seconds, your vehicle will automatically follow the vehicle as it accelerates from a stop.

Vehicle ahead accelerates

- When your vehicle is stopped for less than approximately 3 seconds and the vehicle ahead begins to move, your vehicle will start moving again automatically.

- When your vehicle is at a standstill for more than approximately 3 seconds and the vehicle ahead begins to accelerate, push up the RES+ switch or lightly depress the accelerator pedal. The ICC system starts to follow the vehicle ahead.
- Always check surroundings before restarting the vehicle.

Vehicle ahead not detected

When a vehicle is no longer detected ahead, the ICC system gradually accelerates your vehicle to resume the previously set vehicle speed. The ICC system then maintains the set speed.

When a vehicle is no longer detected, the vehicle ahead detection indicator turns off and speed control status indicator (maintain speed control mode) illuminates (green outline).

The ICC system gradually accelerates to the set speed, but you can depress the accelerator pedal to quickly accelerate. When a vehicle is no longer detected and your vehicle is traveling under approximately 15 mph (24 km/h), the ICC system automatically cancels.

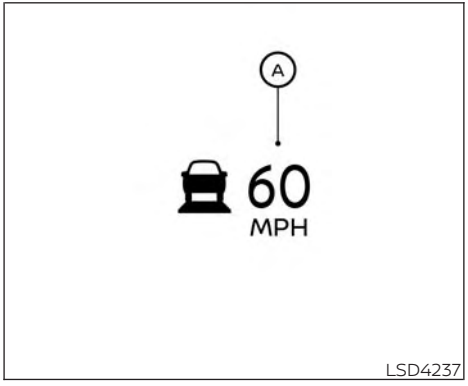

When passing another vehicle, the set speed indicator Ⓐ flashes when the vehicle speed exceeds the set speed. The vehicle ahead detection indicator turns off when the area ahead of the vehicle is open. When the pedal is released, the vehicle returns to the previously set speed. Even though your vehicle speed is set in the ICC system, you can depress the accelerator pedal when it is necessary to accelerate your vehicle rapidly.

Cut-in detection

If a vehicle moves into your traveling lane near your vehicle, the ICC system may inform the driver by flashing the vehicle ahead detection indicator.

Approach warning

If your vehicle comes closer to the vehicle ahead due to rapid deceleration of that vehicle or if another vehicle cuts in, the system warns the driver with the chime and ICC system display. Decelerate by depressing the brake pedal to maintain a safe vehicle distance if:

- The chime sounds.
- The vehicle ahead detection indicator and set distance indicator blink.
- You judge it necessary to maintain a safe distance.

The warning chime may not sound in some cases when there is a short distance between vehicles. Some examples are:

- When the vehicles are traveling at the same speed and the distance between vehicles is not changing.

- When the vehicle ahead is traveling faster and the distance between vehicles is increasing.
- When a vehicle cuts in near your vehicle.

The warning chime will not sound when:

- Your vehicle approaches other vehicles that are parked or moving slowly.
- The accelerator pedal is depressed, overriding the system.

NOTE:

The approach warning chime may sound and the system display may flash when the radar sensor detects objects on the side of the vehicle or on the side of the road. This may cause the ICC system to decelerate or accelerate the vehicle. The radar sensor may detect these objects when the vehicle is driven on winding, narrow, or hilly roads or when the vehicle is entering or exiting a curve. In these cases, you will have to manually control the proper distance ahead of your vehicle.

Also, the sensor sensitivity can be affected by vehicle operation (steering maneuver or driving position in the lane) or traffic or vehicle conditions (for example, if a vehicle is being driven with some damage).

Acceleration when passing

When the ICC system is engaged above 43 mph and following a slower vehicle (below ICC set speed), and the turn signal is activated to the left, the ICC system will automatically start to accelerate the vehicle to help initiate passing on the left and will begin to reduce the distance to vehicle directly ahead. Only the left side turn signal operates this feature. As the driver steers the vehicle and moves into the passing lane, if no vehicle is detected ahead the ICC system will continue to accelerate to the ICC system set speed. If another vehicle is detected ahead, then the vehicle will accelerate up to the following speed of that vehicle. If the vehicle is not steered into the left lane to pass, the acceleration will stop after a short time and regain the set following distance. Acceleration can be stopped at any point by depressing the brake pedal or the CANCEL switch on the steering wheel.

⚠ WARNING

In order to reduce the risk of a collision that may result in serious injury or death, please be aware of the following:

- **This function is only activated with the left turn signal and will briefly accelerate the vehicle even if a lane change is not initiated. This can include non-passing situations such as left side exits.**
- **Ensure that when passing another vehicle, the adjacent lane is clear before initiating the pass. Sudden changes in traffic may occur while passing- always manually steer or brake as needed- never solely rely on the system.**

ICC system limitations

⚠ WARNING

Listed below are the system limitations for the ICC system. Failure to operate the vehicle in accordance with these system limitations could result in serious injury or death:

- **The ICC system is primarily intended for use on straight, dry, open roads with light traffic. It is not advisable to use the ICC system in city traffic or congested areas.**
- **The ICC system will not adapt automatically to road conditions. This system should be used in evenly flowing traffic. Do not use the system on roads with sharp curves or on icy roads, in heavy rain or in fog.**
- **As there is a performance limit to the distance control function, never rely solely on the ICC system. This system does not correct careless, inattentive or absentminded driving or overcome poor visibility in rain, fog, or other bad weather. Decelerate the vehicle speed by depressing the brake pedal, depending on the distance to the vehicle ahead and the surrounding circumstances in order to maintain a safe distance between vehicles.**
- **When the ICC system automatically brings the car to a stop, your vehicle can automatically accelerate if the vehicle is stopped for less than approximately 3 seconds. Be prepared to stop your vehicle if necessary.**
- **Always check surroundings before restarting the vehicle.**
- **Always pay attention to the operation of the vehicle and be ready to manually control the proper following distance. The ICC system may not be able to maintain the selected distance between vehicles (following distance) or selected vehicle speed under some circumstances.**
- **The system may not detect the vehicle in front of you in certain road or weather conditions. To avoid accidents, never use the ICC system under the following conditions:**
  - **On roads with heavy, high-speed traffic or sharp curves**
  - **On slippery road surfaces such as on ice or snow, etc.**
  - **During bad weather (rain, fog, snow, etc.)**
  - **When rain, snow or dirt adhere to the bumper around the distance sensor**
  - **On steep downhill roads (the vehicle may go beyond the set vehicle speed and frequent braking may result in overheating the brakes)**
  - **On repeated uphill and downhill roads**
  - **When traffic conditions make it difficult to keep a proper distance between vehicles because of frequent acceleration or deceleration**
  - **Interference by other radar sources.**
- **Do not use the ICC system if you are towing a trailer. The system may not detect a vehicle ahead.**
- **In some road or traffic conditions, a vehicle or object can unexpectedly come into the sensor detection zone and cause automatic braking. Always stay alert and avoid using the ICC system where not recommended in this warning section.**

The ICC system will not detect the following objects:

- Stationary or slow moving vehicles
- Pedestrians or objects in the roadway
- Oncoming vehicles in the same lane
- Motorcycles traveling offset in the travel lane

The following are some conditions in which the radar sensor cannot properly detect a vehicle ahead and the system may not operate properly:

- When the sensor detection is reduced (conditions such as rain, snow, fog, dust storms, sandstorms, and road spray from other vehicles)
- Driving on a steep downhill slope or roads with sharp curves
- Driving on a bumpy road surface, such as an uneven dirt road
- If dirt, ice, snow or other material is covering the radar sensor area
- A complicated-shaped vehicle such as a car carrier trailer or flatbed truck/trailer is near the vehicle ahead.
- Interference by other radar sources
- When your vehicle is towing a trailer, etc.
- When excessively heavy baggage is loaded in the rear seat or cargo area of your vehicle.

The ICC system is designed to automatically check the radar sensor's operation within the limitations of the system.

The detection zone of the radar sensor is limited. A vehicle ahead must be in the detection zone for the ICC system to maintain the selected distance from the vehicle ahead. A vehicle ahead may move outside of the detection zone due to its position within the same lane of travel. Motorcycles may not be detected in the same lane ahead if they are traveling offset from the center line of the lane. A vehicle that is entering the lane ahead may not be detected until the vehicle has completely moved into the lane.

If this occurs, the ICC system may warn you by blinking the system indicator and sounding the chime. The driver may have to manually control the proper distance away from the vehicle traveling ahead.

The ICC system (with ProPILOT Assist) uses a multi-sensing front camera. The following are some conditions in which the camera may not properly detect a vehicle and detection of a vehicle ahead may be delayed:

- Poor visibility (conditions such as rain, snow, fog, dust storms, sandstorms, and road spray from other vehicles)
- The camera area of the windshield is fogged up or covered with dirt, water drops, ice, snow, etc.
- Strong light (for example, sunlight or high beams from oncoming vehicles) enters the front camera
- A sudden change in brightness occurs (for example, when the vehicle enters or exits a tunnel or shaded area or lightning flashes)

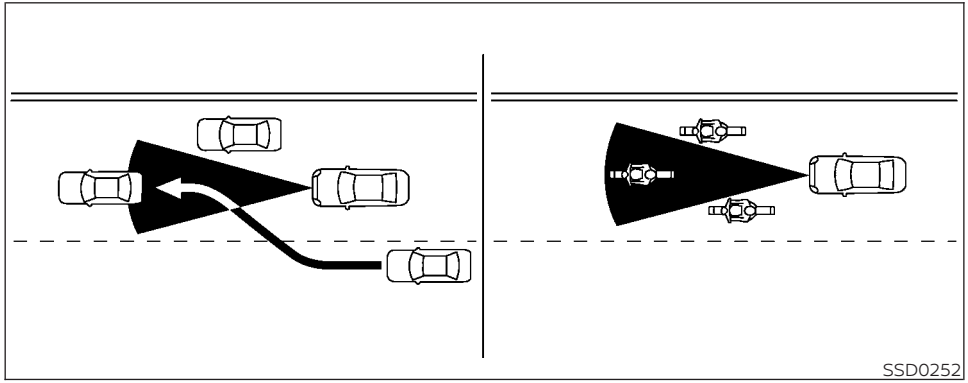
SSD0252

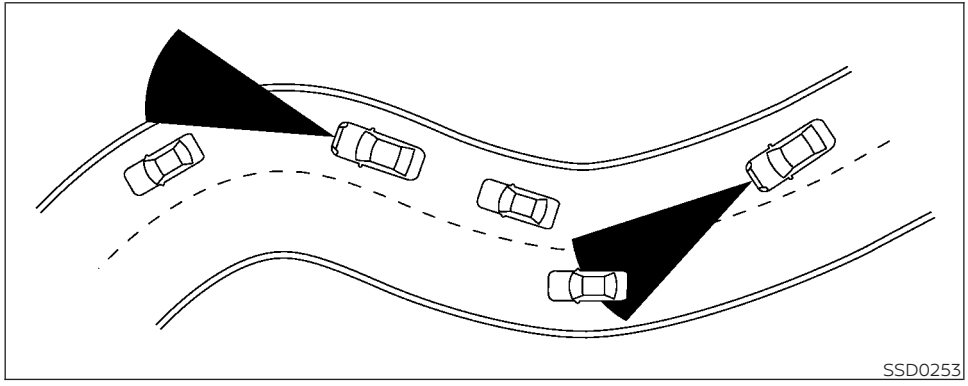

When driving on some roads, such as winding, hilly, curved, narrow roads, or roads which are under construction, the radar sensor may detect vehicles in a different lane, or may temporarily not detect a vehicle traveling ahead. This may cause the radar system to decelerate or accelerate the vehicle.

The detection of vehicles may also be affected by vehicle operation (steering maneuver or traveling position in the lane, etc.) or vehicle condition.

If this occurs, the ICC system may warn you by blinking the system indicator and sounding the chime unexpectedly. You will have to manually control the proper distance away from the vehicle traveling ahead.

System Temporarily Unavailable

The following are conditions in which the ICC system may be temporarily unavailable. In these instances, the ICC system may not cancel and may not be able to maintain the selected following distance from the vehicle ahead.

Condition A

Under the following conditions, the ICC system is automatically canceled. A chime will sound and the system will not be able to be set:

- Any door is open.
- The driver's seat belt is not fastened.
- The vehicle ahead is not detected and your vehicle is traveling below the speed of 24 km/h (15 mph).
- Your vehicle has been stopped by the ICC system for approximately 3 minutes or longer.
- The shift lever is not in the D (Drive) position or manual shift mode.
- The electronic parking brake is applied.
- The VDC or ESP system is turned off.
- The Intelligent Emergency Braking with Pedestrian Detection applies harder braking.
- VDC or ESP (including the traction control system) operates.
- A wheel slips.
- When the radar signal is temporarily interrupted.

Action to take:

When the conditions listed above are no longer present, turn the system off using the ProPILOT Assist switch. Turn the ProPILOT Assist system back on to use the system.

NOTE:
When the ICC system is canceled under the following conditions at a standstill, the electronic parking brake is automatically activated:

- **Any door is open.**
- **The driver's seat belt is not fastened.**
- **Your vehicle has been stopped by the ICC system for approximately 3 minutes or longer.**
- **The shift lever is not in the D (Drive) position or manual shift mode.**
- **The VDC or ESP system is turned off.**
- **When distance measurement becomes impaired due to adhesion of dirt or obstruction to the sensor.**
- **When the radar signal is temporarily interrupted.**

Condition B

When there is inclement weather (rain, fog, snow, etc.) blocking the front radar sensor, the ICC system will automatically be canceled, the chime will sound and the "Forward Driving Aids temporarily disabled Front Sensor blocked See Owner's Manual" or "Temporarily Disabled Front Radar Blocked" warning message will appear in the vehicle information display.

Action to take:

When the conditions listed above are no longer present, the warning message will no longer be available in the vehicle information display and the system will operate normally. If the "Forward Driving Aids temporarily disabled Front Sensor blocked See Owner's Manual" or "Temporarily Disabled Front Radar Blocked" warning message continues to be displayed, have the system checked. It is recommended that you visit a NISSAN dealer for this service.

Condition C

When the radar sensor of the front bumper is covered with dirt or is obstructed, the ICC system will automatically be canceled.

The chime will sound and the "Forward Driving Aids temporarily disabled Front Sensor blocked See Owner's Manual" or "Temporarily Disabled Front Radar Blocked" warning message will appear in the vehicle information display.

Action to take:

If the warning message appears, stop the vehicle in a safe place, place the shift position in the P (Park) position, and turn the engine off. When the radar signal is temporarily interrupted, clean the sensor area of the front bumper and restart the engine. If the "Forward Driving Aids temporarily disabled Front Sensor blocked See Owner's Manual" or "Temporarily Disabled Front Radar Blocked" warning message continues to be displayed, have the system checked. It is recommended that you visit a NISSAN dealer for this service.

Condition D

When driving on roads with limited road structures or buildings (for example, long bridges, deserts, snow fields, driving next to long walls), the system may illuminate the system warning light and display the "Forward Driving Aids temporarily disabled Front Sensor blocked See Owner's Manual" or "Temporarily Disabled Front Radar Blocked" warning message.

Action to take:

When the above driving conditions no longer exist, turn the system back on.



LSD4448

ICC system malfunction

If the ICC system malfunctions, it will be turned off automatically, a chime will sound, and the speed control status warning (orange) will illuminate.

Action to take:

If the warning light comes on, stop the vehicle in a safe place. Turn the engine off, restart the engine and set the ICC system again. If it is not possible to set the ICC system or the indicator stays on, it may be a malfunction. Although the normal driving can be continued, the ICC system should be inspected. It is recommended that you visit a NISSAN dealer for this service.

NOTE:

If the ICC system is temporarily unavailable, the conventional cruise control mode may still be used. For additional information, see "Conventional (fixed speed) cruise control mode" (P. 5-168).

ICC sensor maintenance

The radar sensor is located on the front of the vehicle.

To keep the ICC system operating properly, be sure to observe the following:

- Always keep the sensor area of the front bumper/emblem clean.
- Do not strike or damage the areas around the sensor.
- Do not attach a sticker (including transparent material) or install an accessory near the sensor. This could cause failure or malfunction.
- Do not attach metallic objects near the sensor area (brush guard, etc.). This could cause failure or malfunction.
- Do not alter, remove, or paint the front bumper.

Before customizing or restoring the front bumper, it is recommended that you visit a NISSAN dealer.

The camera sensor is located above the inside mirror.

To keep the proper operation of the systems and prevent a system malfunction, be sure to observe the following:

- Always keep the windshield clean.
- Do not attach a sticker (including transparent material) or install an accessory near the camera unit.
- Do not place reflective materials, such as white paper or a mirror, on the instrument panel. The reflection of sunlight may adversely affect the camera unit's capability of detecting the lane markers.
- Do not strike or damage the areas around the camera unit. Do not touch the camera lens or remove the screw located on the camera unit.

If the camera unit is damaged due to an accident, it is recommended that you visit a NISSAN dealer.

STEERING ASSIST

⚠ WARNING

Failure to follow the warnings and instructions for proper use of the Steering Assist could result in serious injury or death.

- **The Steering Assist is not a replacement for proper driving procedures and is not designed to correct careless, inattentive or absent-minded driving. The Steering Assist will not always steer the vehicle to keep it in the lane. It is not designed to prevent loss of control. It is the driver's responsibility to stay alert, drive safely, keep the vehicle in the traveling lane, and be in control of the vehicle at all times.**
- **As there is a performance limit to the Steering Assist's capability, never rely solely on the system. The Steering Assist does not function in all driving, traffic, weather, and road conditions. Always drive safely, pay attention to the operation of the vehicle, and manually control your vehicle appropriately.**
- **The Steering Assist is intended for use on well-developed freeways or highways with gentle (moderate) curves. To avoid risk of an accident, do not use this system on local or non-highway roads.**
- **The Steering Assist only steers the vehicle to maintain its position in the center of a lane. The vehicle will not steer to avoid objects in the road in front of the vehicle or to avoid a vehicle moving into your lane.**
- **It is the driver's responsibility to stay alert, drive safely, keep the vehicle in the traveling lane, and be in control of the vehicle at all times. Never take your hands off the steering wheel when driving. Always keep your hands on the steering wheel and drive your vehicle safely.**
- **Always drive carefully and attentively when using the Steering Assist. Read and understand the Owner's Manual thoroughly before using the Steering Assist. To avoid serious injury or death, do not rely on the system to prevent accidents or to control the vehicle's speed in emergency situations. Do not use the Steering Assist except in appropriate road and traffic conditions.**

Steering Assist operation

The Steering Assist controls the steering system to help keep your vehicle near the center of the lane when driving. The Steering Assist is combined with the Intelligent Cruise Control (ICC) system. For additional information, see "Intelligent Cruise Control (ICC) (for vehicles with ProPILOT Assist)" (P. 5-149).

The Steering Assist can be activated when the following conditions are met:

- The ICC system is activated.
- Lane markers on both sides are clearly detected.
- A vehicle ahead is detected (when the vehicle is driven at speeds under 60 km/h [37 mph]).
- The driver grips the steering wheel.
- The vehicle is driven at the center of the lane.
- The turn signals are not operated.
- The windshield wiper is not operated in the high (HI) speed operation (the Steering Assist function is disabled after the wiper operates for approximately 10 seconds).

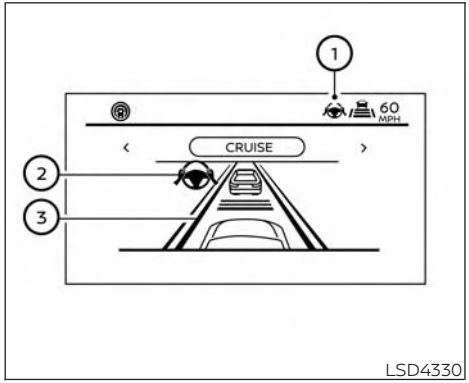

For vehicles with the 7 inch (18 cm) display

Steering Assist display and indicators

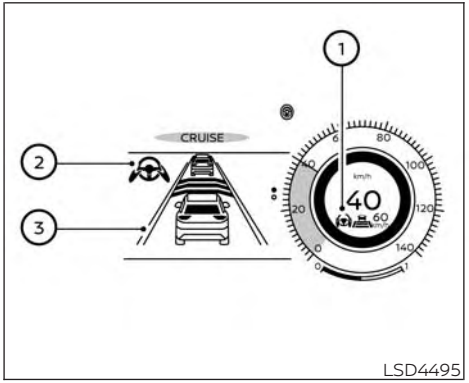

For vehicles with the 12.3 inch (31.2 cm) display

① Steering Assist status indicator/ warning

Displays the status of the Steering Assist by the color of the indicator/warning

- Steering Assist indicator (gray): Steering Assist standby
- Steering Assist indicator (green): Steering Assist active
- Steering Assist indicator (yellow): Steering Assist malfunction

The Steering Assist status indicator illuminates or blinks when Hands Off operation is made.

② Steering Assist indicator

Indicates the status of the Steering Assist by the color of the indicator

- Steering Assist indicator (gray): Steering Assist standby
- Steering Assist indicator (green): Steering Assist active

③ Lane marker indicator

Indicates whether the system detects the lane marker

- Lane marker indicator (gray): Lane markers not detected
- Lane marker indicator (green): Lane markers detected
- Lane marker indicator (yellow): Lane departure is detected

When the Steering Assist is in operation, the Steering Assist status indicator ①, the Steering Assist indicator ②, and the lane marker indicator ③ on the vehicle information display turn green. A chime sounds when the Steering Assist initially activates.

When the Steering Assist deactivates, the Steering Assist status indicator ①, the Steering Assist indicator ②, and the lane marker indicator ③ on the vehicle information display turn gray and a chime sounds.

Intelligent Lane Intervention

When a curve or strong cross wind exceeds the capabilities of the Steering Assist and your vehicle approaches either the left or the right side of the traveling lane, the Intelligent Lane Intervention indicator (orange) on the instrument panel flashes to alert the driver. Then, the Intelligent Lane Intervention system automatically applies the brakes for a short period of time to help assist the driver to return the vehicle to the center of the traveling lane. This action is in addition to any Steering Assist actions.

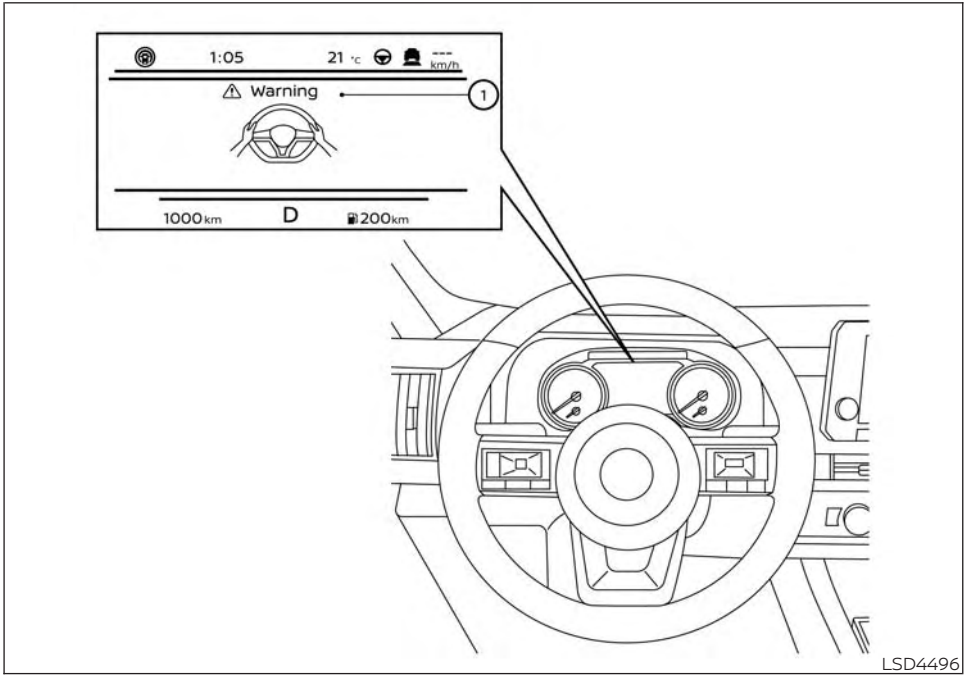

For vehicles with the 7 inch (18 cm) display

Hands on detection

When the Steering Assist is activated, it monitors the driver's steering wheel operation.

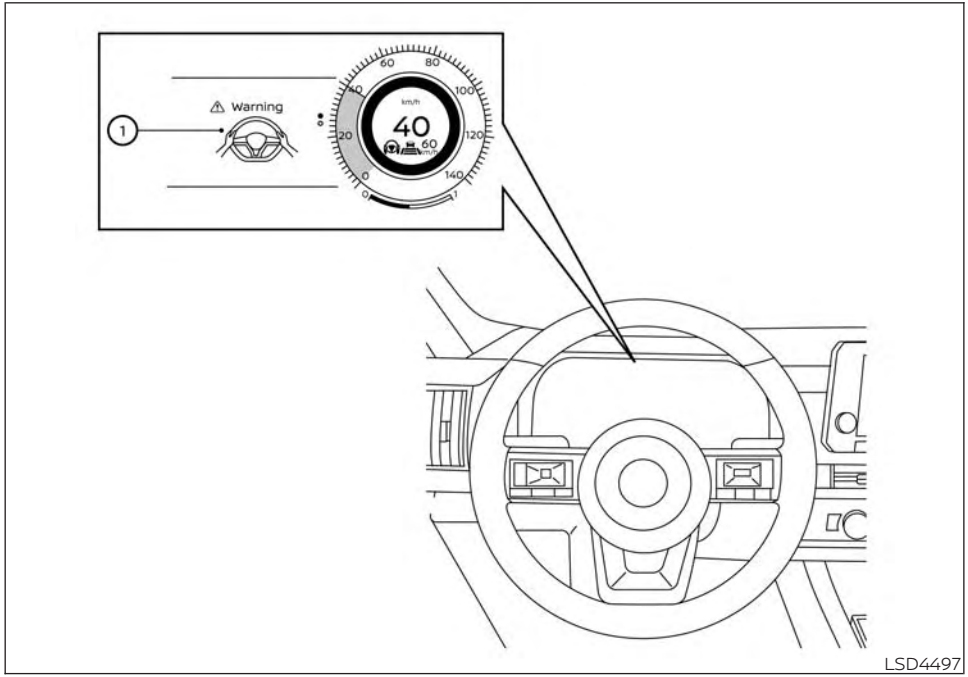

For vehicles with the 12.3 inch (31.2 cm) display

If the steering wheel is not operated or the driver takes his/her hands off the steering wheel for a period of time, the warning ① appears in the vehicle information display.

If the driver does not operate the steering wheel after the warning has been displayed, an audible alert sounds and the warning flashes in the vehicle information display, followed by a quick brake application to request the driver to take control of the vehicle again.

If the driver still does not respond, the ProPILOT Assist turns on the hazard flasher and slows the vehicle to a complete stop.

The driver can cancel the deceleration at any time by steering, braking, accelerating, or operating the ProPILOT Assist switch.

⚠WARNING

Steering Assist is not a system for hands-free driving. Always keep your hands on the steering wheel and drive your vehicle safely. Failure to do so could cause a collision resulting in serious personal injury or death.

NOTE:

If the driver lightly touches (instead of firmly grips) the steering wheel, the steering torque sensor may not detect the driver's hand(s) on the wheel and a sequence of warnings may occur. When the driver holds and operates the steering wheel again, the warnings turn off.

Steering Assist limitations

⚠ WARNING

- **In the following situations, the camera may not detect lane markers correctly or may detect lane markers incorrectly and the Steering Assist may not operate properly:**
  - **When driving on roads where there are multiple parallel lane markers, lane markers that are faded or not painted clearly, non-standard lane markers, or lane markers covered with water, dirt, snow, etc.**
  - **When driving on roads with discontinued lane markers**
  - **When driving on roads with a widening or narrowing lane width**
  - **When driving on roads where there are multiple lanes or unclear lane markers due to road construction**
  - **When driving on roads where there are sharply contrasting objects, such as shadows, snow, water, wheel ruts, seams, or lines remaining after road repairs (the Steering Assist could detect these items as lane markers)**
  - **When driving on roads where the traveling lane merges or separates**
- **Do not use the Steering Assist under the following conditions because the system may not properly detect lane markers. Doing so could cause a loss of vehicle control and result in an accident.**
  - **During bad weather (rain, fog, snow, dust, etc.)**
  - **When rain, snow, sand, etc., is thrown up by the wheels of other vehicles**
  - **When dirt, oil, ice, snow, water, or another object adheres to the camera unit**
  - **When the lens of the camera unit is foggy**
  - **When strong light (for example, sunlight or high beams from oncoming vehicles) shines on the camera**
  - **When the headlights are not bright due to dirt on the lens or the headlights are off in tunnels or darkness**
  - **When a sudden change in brightness occurs (for example, when the vehicle enters or exits a tunnel or is under a bridge)**
  - **When driving on roads where the traveling lane merges or separates or where there are temporary lane markers because of road construction**
  - **When there is a lane closure due to road repairs**
  - **When driving on a bumpy road surface, such as an uneven dirt road**
  - **When driving on sharp curves or winding roads**
  - **When driving on repeated uphill and downhill roads**

- **Do not use the Steering Assist under the following conditions because the system will not operate properly:**
  - **When driving with a tire that is not within normal tire conditions (for example, tire wear, abnormal tire pressure, installation of a spare tire, tire chains, nonstandard wheels)**
  - **When the vehicle is equipped with non-original brake or suspension parts**
  - **When an object such as a sticker or cargo obstructs the camera**
  - **When excessively heavy baggage is loaded in the rear seat or luggage area of your vehicle**
  - **When the vehicle load capacity is exceeded**
  - **When towing a trailer or other vehicle**
- **Excessive noise will interfere with the warning chime sound, and the beep may not be heard.**
- **For the ProPILOT Assist system to operate properly, the windshield in front of the camera must be clean. Replace worn wiper blades. The correct size wiper blades must be used to help make sure the windshield is kept clean. Only use Genuine NISSAN wiper blades, or equivalent wiper blades, that are specifically designed for use on your vehicle model and model year. It is recommended that you visit a NISSAN dealer for the correct parts for your vehicle.**

Steering Assist temporary standby

Automatic standby due to driving operation:

When the driver activates the turn signal, the Steering Assist is temporarily placed in a standby mode. (The Steering Assist restarts automatically when the operating conditions are met again.)

Automatic standby:

In the following cases, a warning message is displayed along with the chime, and the Steering Assist is placed in a temporary standby mode. (The Steering Assist restarts automatically when the operating conditions are met again.)

- When lane markers on both sides are no longer detected
- When a vehicle ahead is no longer detected under approximately 60 km/h (37 mph)

Steering Assist cancel

Under the following conditions, the Steering Assist cancels, and the Steering Assist status indicator and the Steering Assist indicator turn off:

- When unusual lane markers appear in the traveling lane or when the lane marker cannot be correctly detected for some time due to certain conditions (for example, a snow rut, the reflection of light on a rainy day, the presence of several unclear lane markers)
- When the windshield wiper operates in the low (LO) or high (HI) speed operation (the Steering Assist is disabled when the wiper operates for more than approximately 10 seconds)

Action to take:

Turn the ICC system off using the CANCEL switch. When the conditions listed above are no longer present, turn the ICC system on again.

Steering Assist malfunction

When the system malfunctions, it turns off automatically. The Steering Assist status warning illuminates (orange). A chime may sound depending on the situation.

Action to take:

Stop the vehicle in a safe location, place the vehicle in the P (Park) position, turn the engine off, restart the engine, resume driving, and set the Intelligent Cruise Control system again. If the warning (orange) continues to illuminate, the Steering Assist is malfunctioning. Although the vehicle is still drivable under normal conditions, have the system checked. It is recommended that you visit a NISSAN dealer for this service.

Steering Assist maintenance

The camera sensor is located above the inside mirror.

To keep the proper operation of the system and prevent a system malfunction, be sure to observe the following:

- Always keep the windshield clean.
- Do not attach a sticker (including transparent material) or install an accessory near the camera unit.
- Do not place reflective materials, such as white paper or a mirror, on the instrument panel. The reflection of sunlight may adversely affect the camera unit's capability of detecting the lane markers.
- Do not strike or damage the areas around the camera unit. Do not touch the camera lens or remove the screw located on the camera unit.

If the camera unit is damaged due to an accident, it is recommended that you visit a NISSAN dealer.

Radio frequency statement

For Mexico

La operación de este equipo está sujeta a las siguientes dos condiciones:

1. es posible que este equipo o dispositivo no cause interferencia perjudicial y
2. este equipo o dispositivo debe aceptar cualquier interferencia, incluyendo la que pueda causar su operación no deseada.

For United Arabian Emirates (AGCC), Abu Dhabi, Dubai, Sharjah, Ras al-Khaimah, Umm al-Qawain, Ajman and Fujairah

ER66978/18



For Australia

CONVENTIONAL (fixed speed) CRUISE CONTROL MODE

NOTE:

ProPILOT Assist provides no approach warnings, automatic braking, or steering assist in the conventional (fixed speed) cruise control mode.

This mode allows driving at a speed above 40 to 144 km/h (25 to 90 mph) without keeping your foot on the accelerator pedal.

⚠ WARNING

- **In the conventional (fixed speed) cruise control mode, a warning chime does not sound to warn you if you are too close to the vehicle ahead, as neither the presence of the vehicle ahead nor the vehicle-to-vehicle distance is detected.**
- **Pay special attention to the distance between your vehicle and the vehicle ahead of you or a collision could occur.**
- **Always confirm the setting in the ICC system display.**
- **Do not use the conventional (fixed speed) cruise control mode when driving under the following conditions:**
  - **When it is not possible to keep the vehicle at a set speed**
  - **In heavy traffic or in traffic that varies in speed**
  - **On winding or hilly roads**
  - **On slippery roads (rain, snow, ice, etc.)**
  - **In very windy areas**
- **Doing so could cause a loss of vehicle control and result in an accident.**

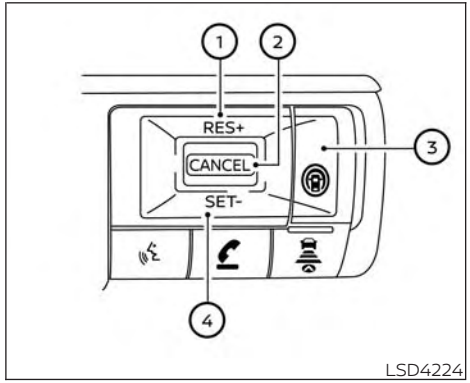

Conventional (fixed speed) cruise control switches

① RES+ switch:
Resumes set speed or increases speed incrementally

② CANCEL switch:
Deactivates the system without erasing the set speed

③ ProPILOT Assist switch:
Turns the ProPILOT Assist system on or off

④ SET- switch:
Sets desired cruise speed or reduces speed incrementally

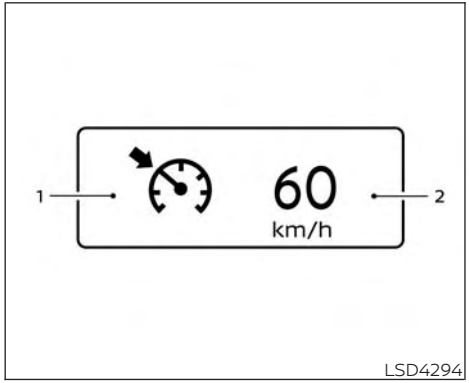

LSD4294

Conventional (fixed speed) cruise control mode display and indicators

The display is located in the vehicle information display.

1. Cruise indicator:
   This indicator indicates the condition of the ICC system depending on a color.

- Cruise control ON indicator (gray): Indicates that the ProPILOT Assist switch is on
- Cruise control SET indicator (green): Indicates that the cruising speed is set
- Cruise control warning (yellow): Indicates that there is a malfunction in the ICC system

2. Set vehicle speed indicator:
   This indicator indicates the set vehicle speed.

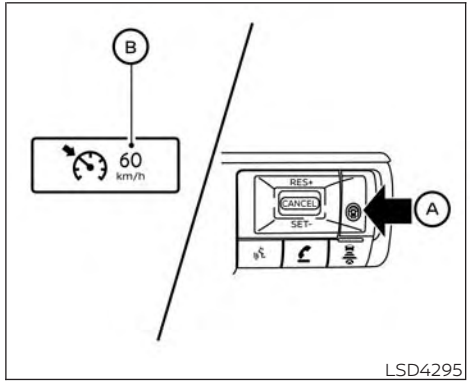

LSD4295

Operating conventional (fixed speed) cruise control mode

To turn on the conventional (fixed speed) cruise control mode, push and hold the ProPILOT Assist switch Ⓐ for longer than about 1.5 seconds.

When pushing the ProPILOT Assist switch on, the conventional (fixed speed) cruise control mode display and indicators Ⓑ are displayed in the vehicle information display. After you hold the ProPILOT Assist switch on for longer than about 1.5 seconds, the ICC system display turns off.

The cruise indicator appears. You can now set your desired cruising speed. Pushing the ProPILOT Assist switch again will turn the system completely off. When the ignition switch is placed in the OFF position, the system is also automatically turned off.

To use the ICC system again, quickly push and release the ProPILOT Assist switch (vehicle-to vehicle distance control mode) or push and hold it (conventional cruise control mode) again to turn it on.

⚠CAUTION

To avoid accidentally engaging cruise control, make sure to turn the ProPILOT Assist switch off when not using the ICC system.

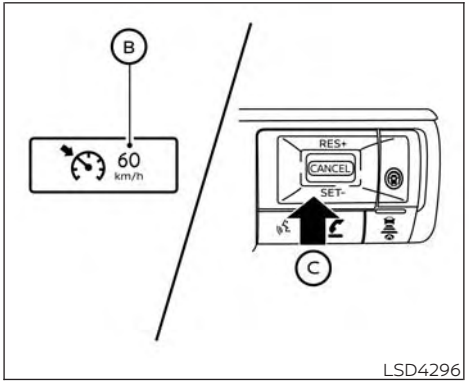

To set cruising speed, accelerate your vehicle to the desired speed, push the SET- Ⓒ switch and release it. (The color of the cruise indicator changes to green and set vehicle speed indicator comes on.) Take your foot off the accelerator pedal. Your vehicle will maintain the set speed.

- To pass another vehicle, depress the accelerator pedal. When you release the pedal, the vehicle will return to the previously set speed.
- The vehicle may not maintain the set speed when going up or down steep hills. If this happens, manually maintain vehicle speed.

To cancel the preset speed, use any of the following methods:

1. Push the CANCEL switch. The vehicle speed indicator will turn off.
2. Tap the brake pedal. The vehicle speed indicator will turn off.
3. Turn the ProPILOT Assist switch off. Both the cruise indicator and vehicle speed indicator will turn off.

To reset at a faster cruising speed, use one of the following three methods:

1. Depress the accelerator pedal. When the vehicle attains the desired speed, push and release the SET- switch.
2. Push and hold the RES+ switch. When the vehicle attains the desired speed, release the switch.
3. Push, then quickly release the RES+ switch. Each time you do this, the set speed will increase by about 1.6 km/h (1 mph).

To reset at a slower cruising speed, use one of the following three methods:

1. Lightly tap the brake pedal. When the vehicle attains the desired speed, push the SET- switch and release it.
2. Push and hold the SET- switch. Release the switch when the vehicle slows down to the desired speed.
3. Push, then quickly release the SET- switch. Each time you do this, the set speed will decrease by about 1.6 km/h (1 mph).

To resume the preset speed, push and release the RES+ switch. The vehicle will resume the last set cruising speed when the vehicle speed is over 40 km/h (25 mph).

⚠WARNING

Failure to follow the warnings and instructions for proper use of the RAB system could result in serious injury or death.

- **The RAB system is a supplemental aid to the driver. It is not a replacement for proper driving procedures. Always use the side and rear mirrors and turn and look in the direction you will move before and while backing up. Never rely solely on the RAB system. It is the driver's responsibility to stay alert, drive safely, and be in control of the vehicle at all times.**
- **There is a limitation to the RAB system capability. The RAB system is not effective in all situations.**
- **Inclement weather or ultrasonic sources such as an automatic car wash, a truck's compressed-air brakes or a pneumatic drill may affect the function of the system; this may include reduced performance or a false activation.**

The RAB system can assist the driver when the vehicle is backing up and approaching objects directly behind the vehicle.

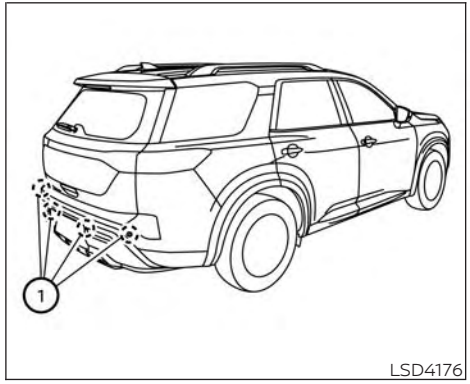

LSD4176

The RAB system detects obstacles behind the vehicle using the parking sensors ① located on the rear bumper.

NOTE:

You can temporarily cancel the sonar function in the vehicle, and the RAB system will continue to operate in the vehicle. For additional information, see "Front and Rear Sonar System" (P. 5-237).

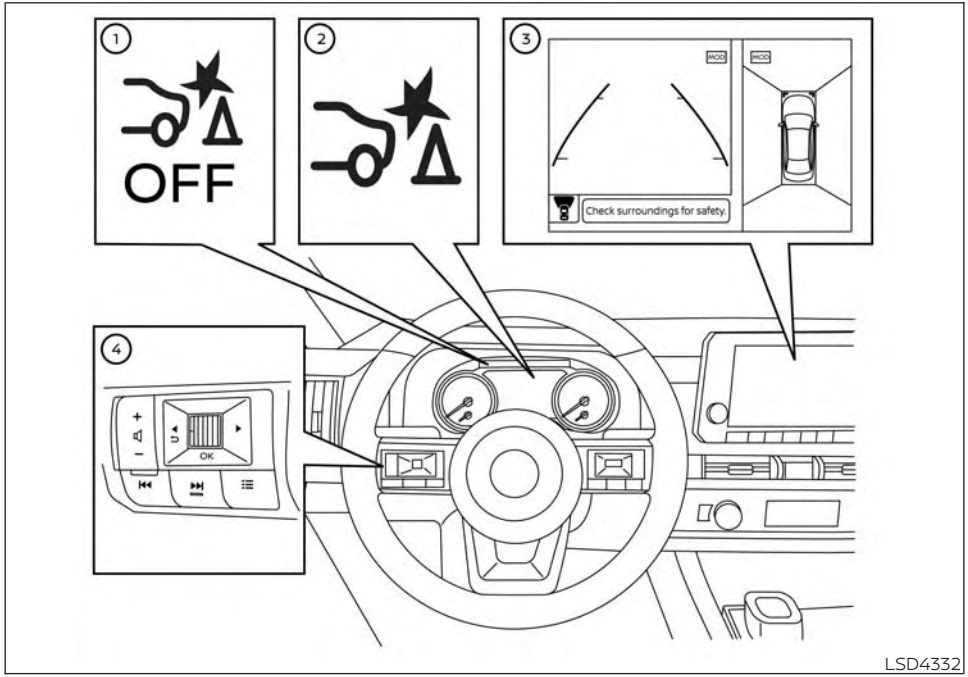

For vehicles with the 7 inch (18 cm) display

RAB SYSTEM OPERATION

① RAB system warning light

② RAB system warning indicator

③ Center display

④ Steering-wheel-mounted controls (left side)

When the shift lever is in the R (Reverse) position and the vehicle speed is less than approximately 15 km/h (9 mph), the RAB system operates.

If a risk of a collision with an obstacle is detected when your vehicle is backing up, the RAB system warning indicator will flash in the vehicle information display, a red frame will appear in the center display (for vehicles with the Intelligent Around View® Monitor system), and the system will chime three times. The system will then automatically apply the brakes. After the automatic brake application, the driver must depress the brake pedal to maintain brake pressure.

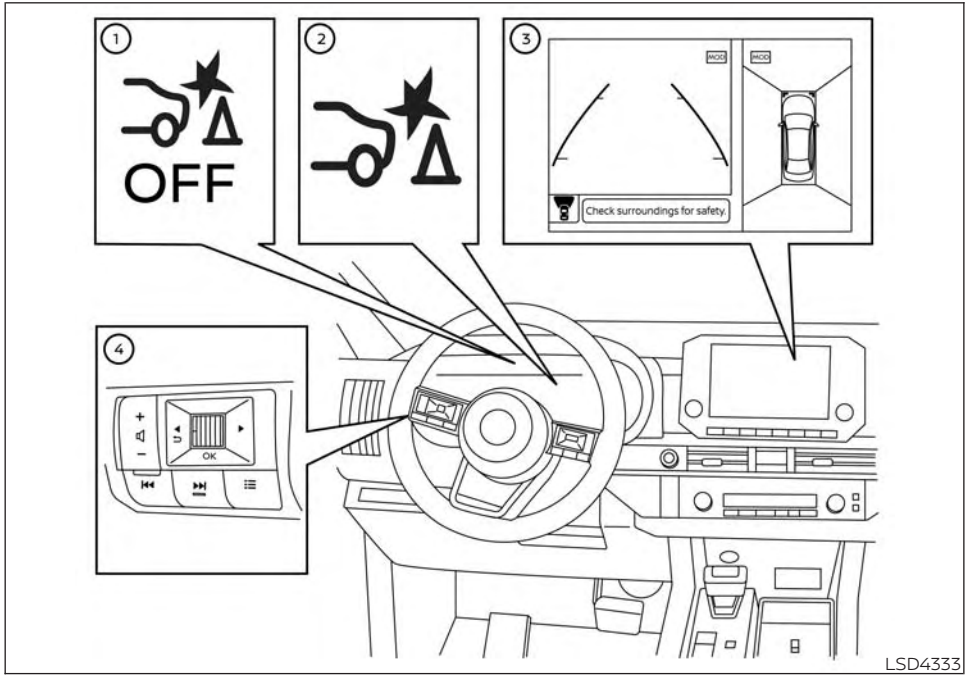

For vehicles with the 12.3inch (31.2 cm) display

NOTE:

- **The brake lights of the vehicle come on when braking is performed by the RAB system.**
- **When the brakes operate, a noise may be heard. This is not a malfunction.**

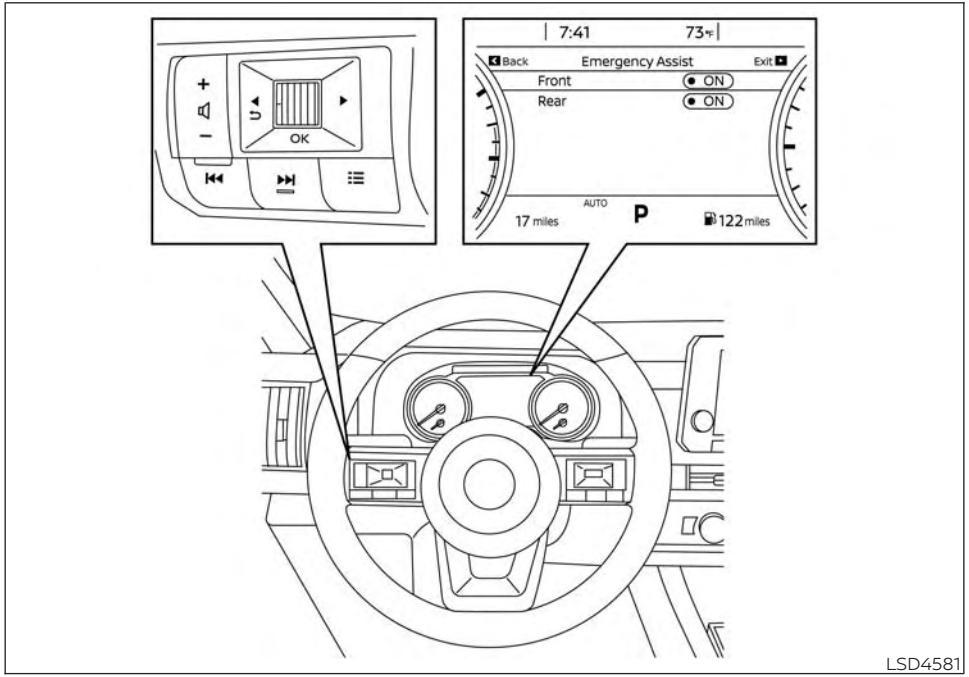

For vehicles with the 7 inch (18 cm) display

TURNING THE RAB SYSTEM ON/OFF

Perform the following steps to turn the RAB system ON or OFF.

1. Press the ◀▶ button until "Settings" displays in the vehicle information display. Use the scroll dial to select "Driver Assistance." Then press the OK button.
2. Select "Emergency Assist" and press the OK button.
3. Select "Rear" and press the OK button to turn the system on or off.

When the RAB system is turned off and when the vehicle is in the R (Reverse) position, the RAB system warning light illuminates.

NOTE:

The RAB system will be automatically turned on when the engine is restarted.

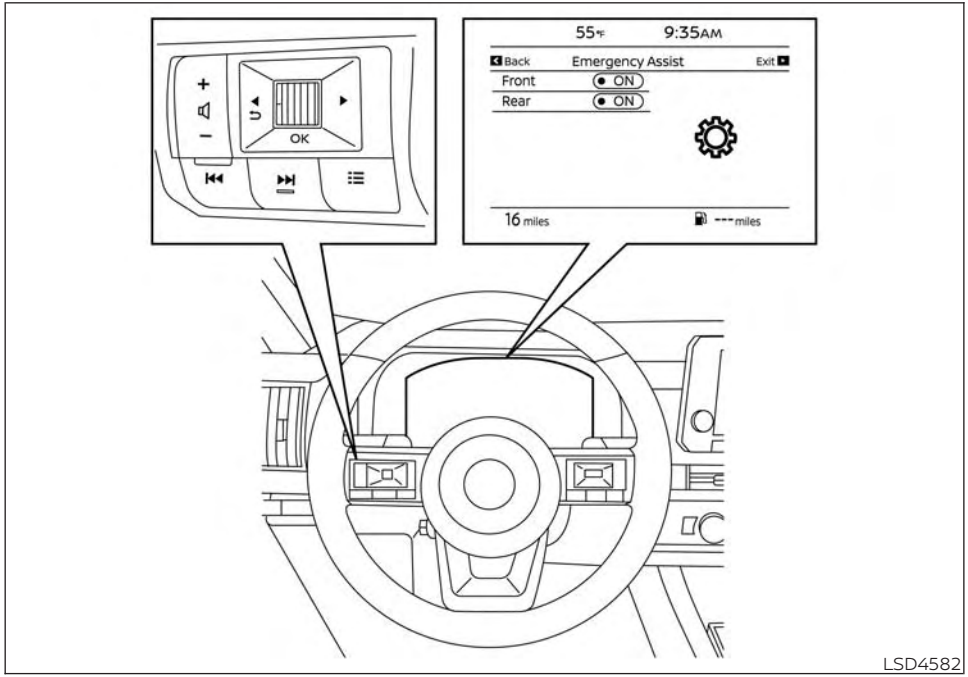

For vehicles with the 12.3 inch (31.2 cm) display

RAB SYSTEM LIMITATIONS

⚠WARNING

Listed below are the system limitations for the RAB system. Failure to follow the warnings and instructions for proper use of the RAB system could result in serious injury or death.

- **When the vehicle approaches an obstacle while the accelerator or brake pedal is depressed, the function may not operate or the start of operation may be delayed. The RAB system may not operate or may not perform sufficiently due to vehicle conditions, driving conditions, the traffic environment, the weather, road surface conditions, etc. Do not wait for the system to operate. Operate the brake pedal by yourself as soon as necessary.**
- **If it is necessary to override RAB operation, strongly press the accelerator pedal.**

- Always check your surroundings and turn to check what is behind you before and while backing up. The RAB system detects stationary objects behind the vehicle. The RAB system does not detect the following objects:
  - Moving objects
  - Low objects
  - Narrow objects
  - Wedge-shaped objects
  - Objects close to the bumper (less than approximately 30 cm [1 ft])
  - Objects that suddenly appear
  - Thin objects such as rope, wire, chain, etc.
- The RAB system may not operate for the following obstacles:
  - Obstacles located high off the ground
  - Obstacles in a position offset from your vehicle
  - Obstacles, such as spongy materials or snow, that have soft outer surfaces and can easily absorb a sound wave
- The RAB system may not operate in the following conditions:
  - There is rain, snow, ice, dirt, etc., attached to the sonar sensors.
  - A loud sound is heard in the area around the vehicle.
  - The surface of the obstacle is diagonal to the rear of the vehicle.
- The RAB system may unintentionally operate in the following conditions:
  - There is overgrown grass in the area around the vehicle.
  - There is a structure (e.g., a wall, toll gate equipment, a narrow tunnel, a parking lot gate) near the side of the vehicle.
  - There are bumps, protrusions, or manhole covers on the road surface.
  - The vehicle drives through a draped flag or a curtain.
  - There is an accumulation of snow or ice behind the vehicle.
  - An ultrasonic wave source, such as another vehicle's sonar, is near the vehicle.
- Once the automatic brake control operates, it does not operate again if the vehicle approaches the same obstacle.
- The automatic brake control can only operate for a short period of time. Therefore, the driver must depress the brake pedal.
- In the following situations, the RAB system may not operate properly or may not function sufficiently:
  - The vehicle is driven in bad weather (rain, fog, snow, etc.).
  - The vehicle is driven on a steep hill.
  - The vehicle's posture is changed (e.g., when driving over a bump).
  - The vehicle is driven on a slippery road.
  - The vehicle is turned sharply by turning the steering wheel fully.
  - Snow chains are used.
  - Wheels or tires other than NISSAN recommended are used.

- **The brakes are cold at low ambient temperatures or immediately after driving has started.**
- **The braking force becomes poor due to wet brakes after driving through a puddle or washing the vehicle.**

· Turn the RAB system off in the following conditions to prevent the occurrence of an unexpected accident resulting from sudden system operation:

- **The vehicle is towed.**
- **The vehicle is carried on a flatbed truck.**
- **The vehicle is on the chassis dynamometer.**
- **The vehicle drives on an uneven road surface.**
- **The vehicle is towing an object (if so equipped).**
- **Suspension parts other than those designated as Genuine NISSAN parts are used. (If the vehicle height or the vehicle body inclination is changed, the system may not detect an obstacle correctly.)**
- **If the vehicle is using an accessory like a bike rack, or cargo carrier that blocks the sensors.**

· Excessive noise (e.g., audio system volume, an open vehicle window) will interfere with the chime sound, and it may not be heard.

SYSTEM MALFUNCTION

If the RAB system malfunctions, it will be turned off automatically, the RAB system warning light will illuminate, and the "Malfunction" warning message will appear in the vehicle information display.

Action to take

If the warning light illuminates, park the vehicle in a safe location, turn the engine off, and restart the engine. If the warning light continues to illuminate, have the RAB system checked. It is recommended that you visit a NISSAN dealer for this service.

NOTE:

If the RAB system cannot be operated temporarily, the RAB system warning light blinks.

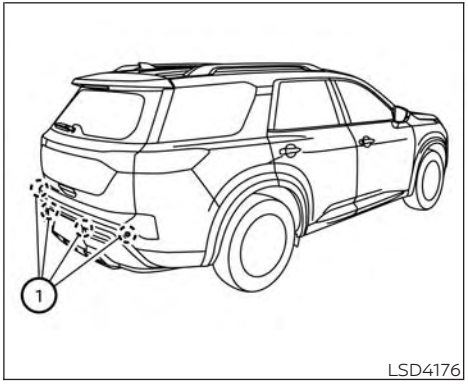

LSD4176

SYSTEM MAINTENANCE

Observe the following items to ensure proper operation of the system:

- Always keep the parking sensors ① clean.
- If the parking sensors are dirty, wipe them off with a soft cloth while being careful to not damage them.

- Do not subject the area around the parking sensors ① to strong impact. Also, do not remove or disassemble the parking sensors. If the parking sensors and peripheral areas are deformed in an accident, etc., have the sensors checked. It is recommended that you visit a NISSAN dealer for this service.
- Do not install any stickers (including transparent stickers) or accessories on the parking sensors ① and their surrounding areas. This may cause a malfunction or improper operation.

INTELLIGENT EMERGENCY BRAKING (if so equipped)

⚠WARNING

Failure to follow the warnings and instructions for proper use of the Intelligent Emergency Braking system could result in serious injury or death.

- **The Intelligent Emergency Braking system is a supplemental aid to the driver. It is not a replacement for the driver's attention to traffic conditions or responsibility to drive safely. It cannot prevent accidents due to carelessness or dangerous driving techniques.**
- **The Intelligent Emergency Braking system does not function in all driving, traffic, weather and road conditions.**

The Intelligent Emergency Braking system can assist the driver when there is a risk of a forward collision with the vehicle ahead in the traveling lane.

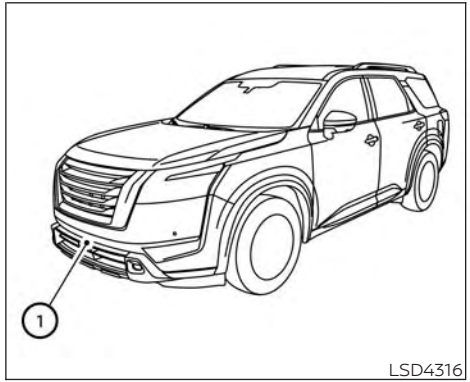

The Intelligent Emergency Braking system uses a radar sensor located on the front of the vehicle ① to measure the distance to the vehicle ahead in the same lane.

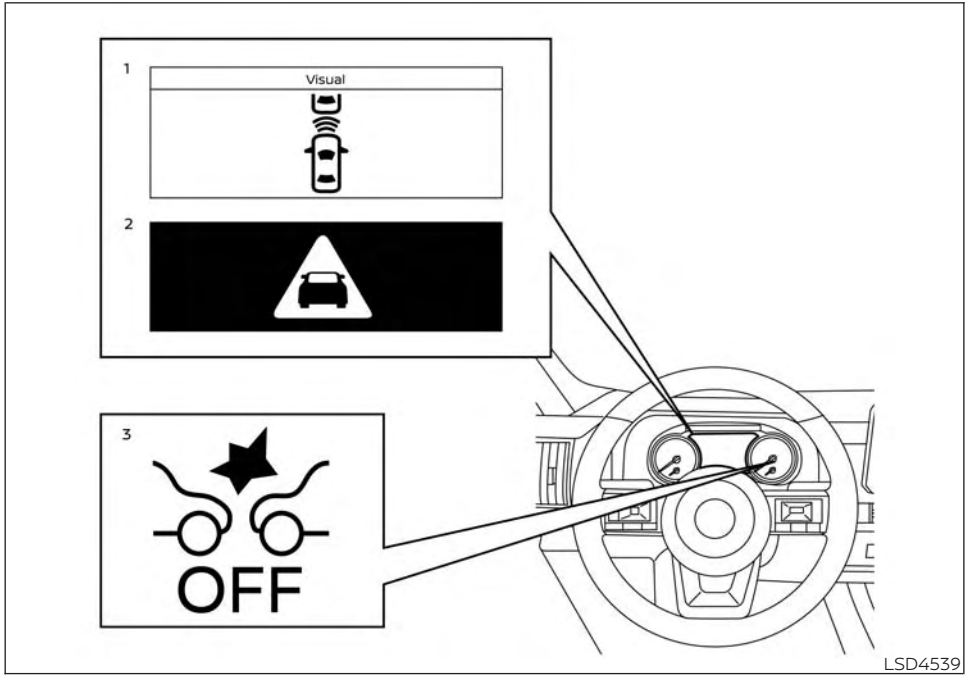

For vehicles with the 7 inch (18 cm) display

1. Vehicle ahead detection indicator
2. Intelligent Emergency Braking emergency warning indicator
3. Intelligent Emergency Braking system warning light

The Intelligent Emergency Braking system operates at speeds above approximately 5 km/h (3 mph). For the pedestrian detection function, the system operates at speeds between 10 – 60 km/h (6 – 37 mph).

If a risk of a forward collision is detected, the Intelligent Emergency Braking system will firstly provide the warning to the driver by flashing the vehicle ahead detection indicator (yellow) in the vehicle information display and providing an audible alert. If the driver applies the brakes quickly and forcefully after the warning, and the Intelligent Emergency Braking system detects that there is still the possibility of a forward collision, the system will automatically increase the braking force.

INTELLIGENT EMERGENCY BRAKING SYSTEM OPERATION

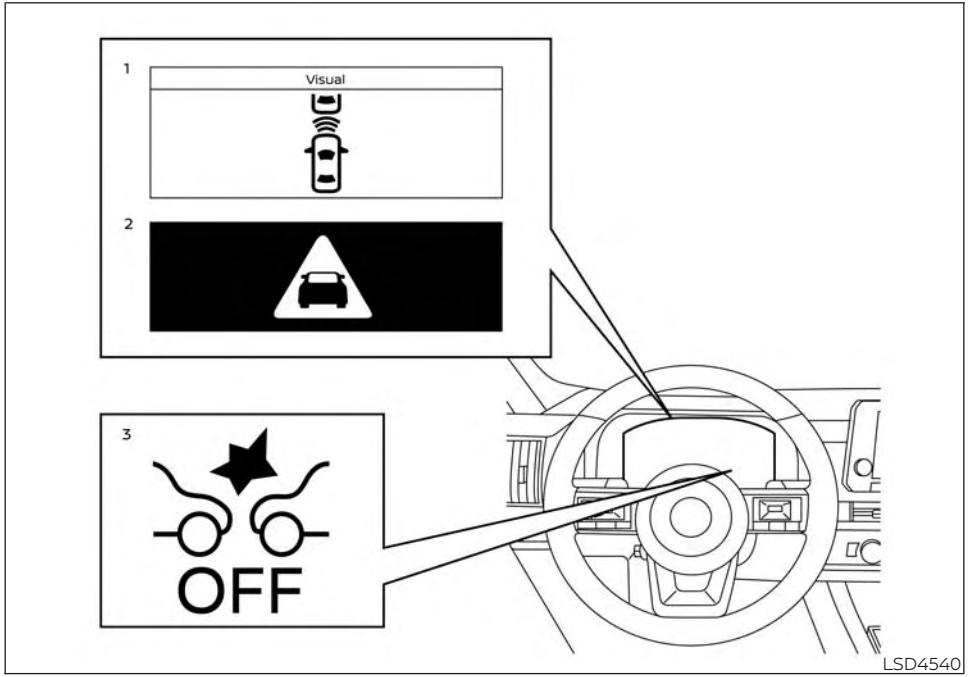

For vehicles with the 12.3 inch (31.2 cm) display

If the driver does not take action, the Intelligent Emergency Braking system issues the second visual (flashing) (red and white) and audible warning. If the driver releases the accelerator pedal, then the system applies partial braking. If the risk of a collision becomes imminent, the Intelligent Emergency Braking system applies harder braking automatically.

While the Intelligent Emergency Braking system is operating, you may hear the sound of brake operation. This is normal and indicates that the Intelligent Emergency Braking system is operating properly.

NOTE:

The vehicle's brake lights come on when any braking is performed by the Intelligent Emergency Braking system.

Depending on vehicle speed and distance to the vehicle ahead, as well as driving and roadway conditions, the system may help the driver avoid a forward collision or may help mitigate the consequences if a collision should be unavoidable. If the driver is handling the steering wheel, accelerating or braking, the Intelligent Emergency Braking system will function later or will not function.

The automatic braking will cease under the following conditions:

- When the steering wheel is turned to avoid a collision.
- When the accelerator pedal is depressed.
- When there is no longer a vehicle detected ahead.

If the Intelligent Emergency Braking system has stopped the vehicle, the vehicle will remain at a standstill for approximately 2 seconds before the brakes are released.

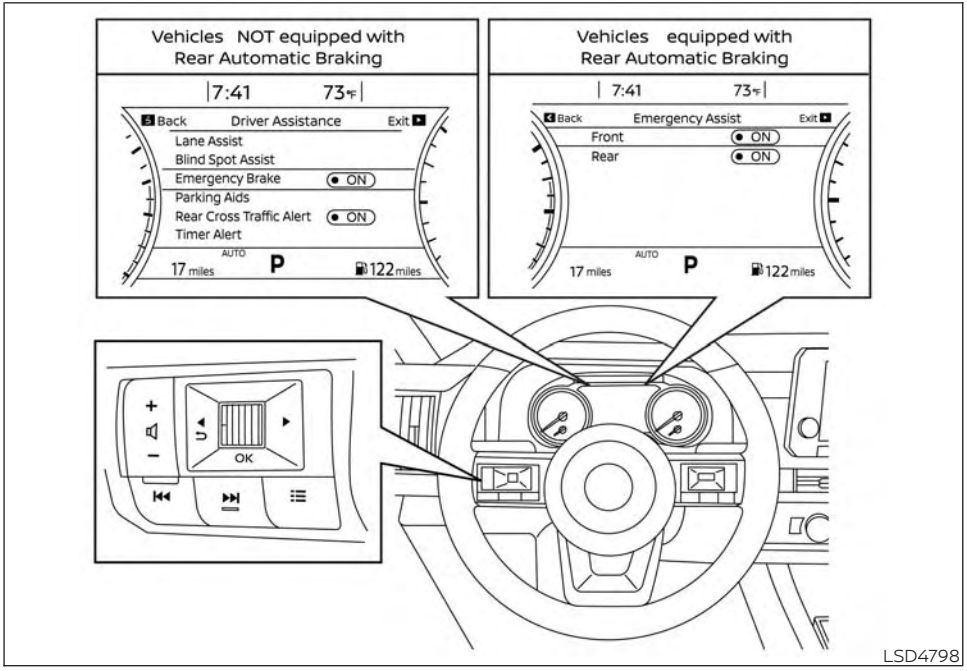

For vehicles with the 7 inch (18 cm) display

TURNING THE INTELLIGENT EMERGENCY BRAKING SYSTEM ON/OFF

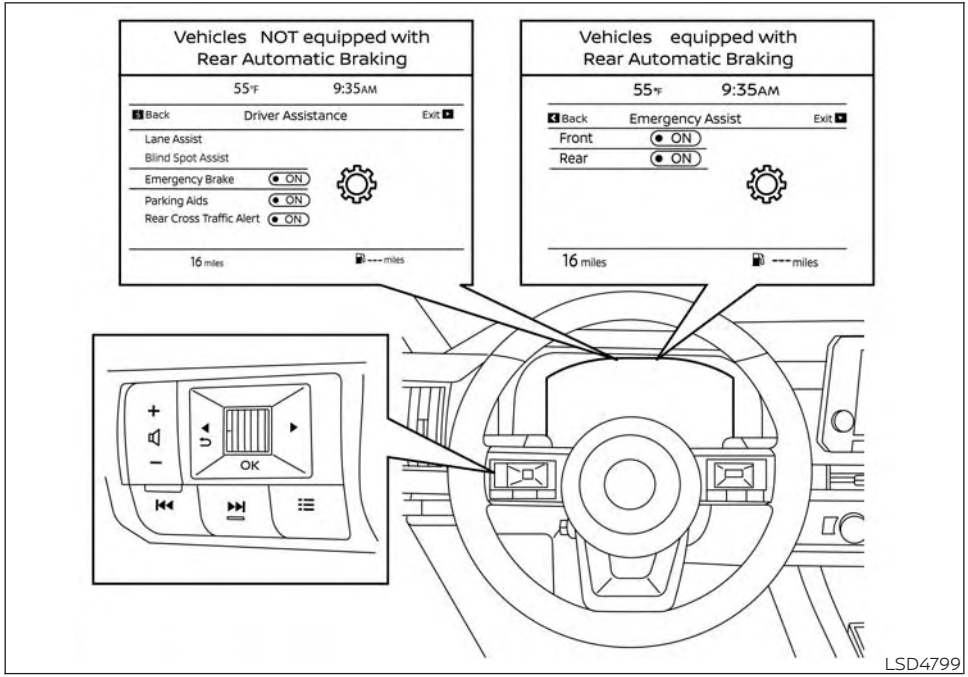

For vehicles with the 12.3 inch (31.2 cm) display

Perform the following steps to enable or disable the Intelligent Emergency Braking system.

For vehicles equipped with Rear Automatic Braking:

1. Press the ◀▶ button until "Settings" displays in the vehicle information display. Use the scroll dial to select "Driver Assistance." Then press the OK button.
2. Select "Emergency Assist" and press the OK button.
3. Select "Front" and press the OK button to turn the system on or off.

For vehicles NOT equipped with Rear Automatic Braking:

1. Press the ◀▶ button until "Settings" displays in the vehicle information display. Use the scroll dial to select "Driver Assistance." Then press the OK button.
2. Select "Emergency Brake" and press the OK button to turn the system on or off.

When the Intelligent Emergency Braking system is turned off, the Intelligent Emergency Braking system warning light illuminates.

NOTE:

- **The Intelligent Emergency Braking system will be automatically turned on when the engine is restarted.**
- **The Intelligent Forward Collision Warning system is integrated into the Intelligent Emergency Braking system. There is not a separate selection in the vehicle information display for the Intelligent Forward Collision Warning system. When the Intelligent Emergency Braking system is turned off, the Intelligent Forward Collision Warning system is also turned off.**

INTELLIGENT EMERGENCY BRAKING SYSTEM LIMITATIONS

⚠ WARNING

Listed below are the system limitations for the Intelligent Emergency Braking system. Failure to operate the vehicle in accordance with these system limitations could result in serious injury or death.

- **The Intelligent Emergency Braking system cannot detect all vehicles under all conditions.**
- **The radar sensor does not detect the following objects:**
  - **Pedestrians, animals or obstacles in the roadway.**
  - **Oncoming vehicles.**
  - **Crossing vehicles.**
- **The radar sensor has some performance limitations. If a stationary vehicle is in the vehicle's path, the Intelligent Emergency Braking system will not function when the vehicle is driven at speeds over approximately 80 km/h (50 mph).**
- **The radar sensor may not detect a vehicle ahead in the following conditions:**
  - **Dirt, ice, snow or other material covering the radar sensor.**
  - **Interference by other radar sources.**
  - **Snow or road spray from traveling vehicles.**
  - **If the vehicle ahead is narrow (e.g. motorcycle).**
  - **When driving on a steep downhill slope or roads with sharp curves.**
- **In some road or traffic conditions, the Intelligent Emergency Braking system may unexpectedly apply partial braking. When acceleration is necessary, continue to depress the accelerator pedal to override the system.**
- **Braking distances increase on slippery surfaces.**
- **The system is designed to automatically check the sensor's functionality, within certain limitations. The system may not detect some forms of obstructions of the sensor area such as ice, snow, stickers, etc. In these cases, the system may not be able to warn the driver properly. Be sure that you check, clean and clear the sensor area regularly.**
- **Excessive noise will interfere with the warning chime sound, and the chime may not be heard.**

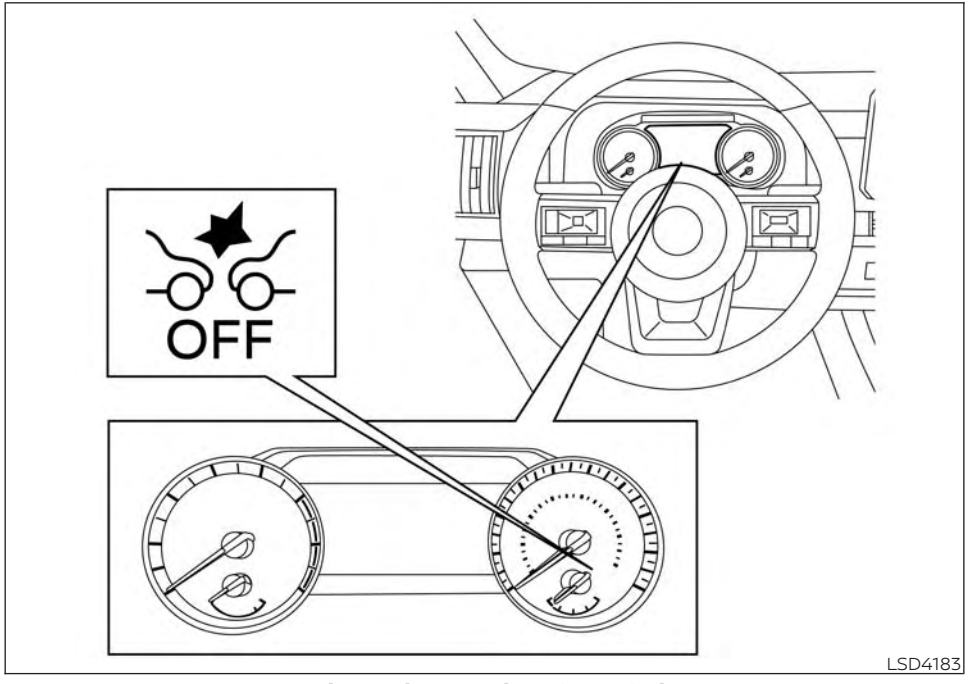

For vehicles with the 7 inch (18 cm) display

SYSTEM TEMPORARILY UNAVAILABLE

Condition A:

In the following conditions, the Intelligent Emergency Braking system warning light blinks and the system will be turned off automatically:

- The radar sensor picks up interference from another radar source.
- The camera area of the windshield is misted or frozen.
- Strong light is shining from the front.
- The cabin temperature is over approximately 40°C (104°F) in direct sunlight.
- The camera area of the windshield glass is continuously covered with dirt, etc.

Action to take

When the above conditions no longer exist, the Intelligent Emergency Braking system will resume automatically.

NOTE:

When the inside of the windshield on the camera area is misted or frozen, it will take a period of time to remove it after the A/C turns on. If dirt appears on this area, it is recommended that you visit a NISSAN dealer.

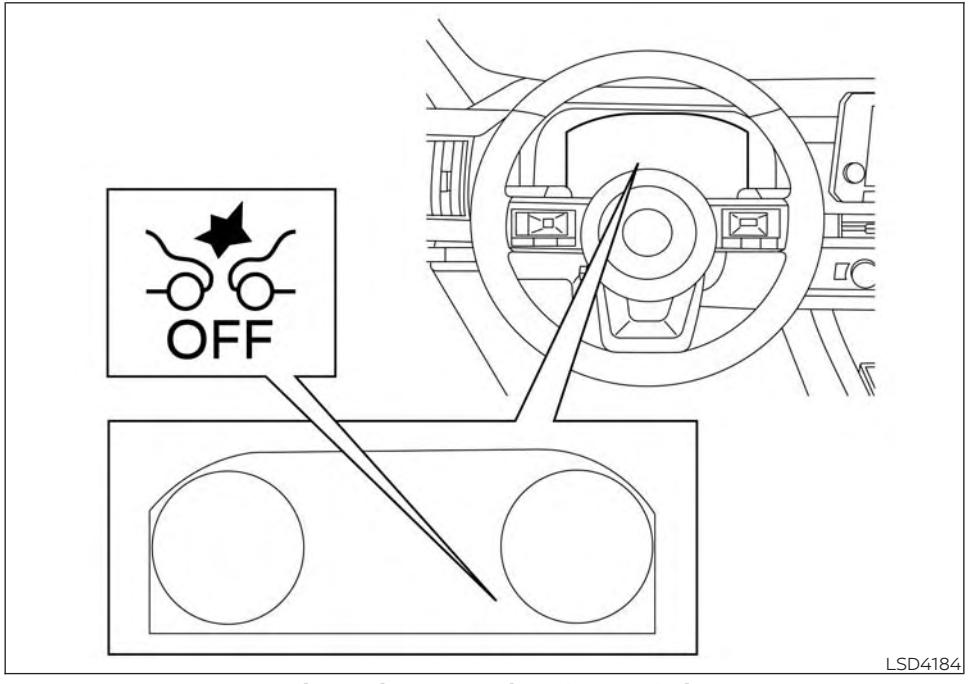

For vehicles with the 12.3 inch (31.2 cm) display

Condition B:

When there is inclement weather (rain, fog, snow, etc.) blocking the front radar sensor, the Intelligent Emergency Braking system will be canceled, the chime will sound and the "Forward Driving Aids temporarily disabled Front Sensor blocked See Owner's Manual" warning message will appear in the vehicle information display.

Action to take:

When the conditions listed above are no longer present, the warning message will no longer be available in the vehicle information display. If the "Forward Driving Aids temporarily disabled Front Sensor blocked See Owner's Manual" warning message continues to be displayed, have the system checked. It is recommended that you visit a NISSAN dealer for this service.

Condition C:

When the radar sensor of the front bumper is covered with dirt or is obstructed, the Intelligent Emergency Braking system will automatically be canceled. The chime will sound and the "Forward Driving Aids temporarily disabled Front Sensor blocked See Owner's Manual" warning message will appear in the vehicle information display.

Action to take:

If the warning message appears, stop the vehicle in a safe place, place the shift position in the P (Park) position, and turn the engine off. When the radar signal is temporarily interrupted, clean the sensor area of the front bumper and restart the engine. If the "Forward Driving Aids temporarily disabled Front Sensor blocked See Owner's Manual" warning message continues to be displayed, have the system checked. It is recommended that you visit a NISSAN dealer for this service.

Condition D

When driving on roads with limited road structures or buildings (for example, long bridges, deserts, snowfields, driving next to long walls), the system may illuminate the system warning light and display the "Forward Driving Aids temporarily disabled Front Sensor blocked See Owner's Manual" message.

Action to take:

When the above driving conditions no longer exist, turn the system back on.

NOTE:
If the Intelligent Emergency Braking system stops working, the Intelligent Forward Collision Warning system will also stop working.



LSD4448

SYSTEM MALFUNCTION

If the Intelligent Emergency Braking system malfunctions, it will be turned off automatically, a chime will sound, the Intelligent Emergency Braking system warning light (orange) will illuminate and the warning message [Malfunction] will appear in the vehicle information display.

Action to take

If the warning light (orange) comes on, stop the vehicle in a safe location, turn the engine off and restart the engine. If the warning light continues to illuminate, have the Intelligent Emergency Braking system checked. It is recommended that you visit a NISSAN dealer for this service.

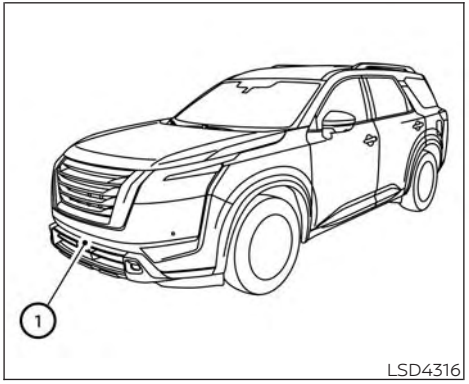

LSD4316

SYSTEM MAINTENANCE

The radar sensor is located on the front of the vehicle ①.

To keep the Intelligent Emergency Braking system operating properly, be sure to observe the following:

- Always keep the sensor areas of the front bumper clean.
- Do not strike or damage the areas around the sensors (e.g., bumper).
- Do not cover or attach stickers, or install any accessory near the sensors. This could block sensor signals and/or cause failure or malfunction.
- Do not attach metallic objects near the radar sensor (brush guard, etc.). This could cause failure or malfunction.
- Do not place reflective materials, such as white paper or a mirror, on the instrument panel. The reflection of sunlight may adversely affect the camera unit's detection capability.
- Do not alter, remove or paint the front bumper. Before customizing or restoring the front bumper, it is recommended that you visit a NISSAN dealer.

Radio frequency statement

For Mexico

La operación de este equipo está sujeta a las siguientes dos condiciones:

1. es posible que este equipo o dispositivo no cause interferencia perjudicial y
2. este equipo o dispositivo debe aceptar cualquier interferencia, incluyendo la que pueda causar su operación no deseada.

For United Arabian Emirates (AGCC), Abu Dhabi, Dubai, Sharjah, Ras al-Khaimah, Umm al-Qawain, Ajman and Fujairah

ER66978/18



For Australia

INTELLIGENT EMERGENCY BRAKING WITH PEDESTRIAN DETECTION (if so equipped)

⚠WARNING

Failure to follow the warnings and instructions for proper use of the Intelligent Emergency Braking with Pedestrian Detection system could result in serious injury or death.

- **The Intelligent Emergency Braking with Pedestrian Detection system is a supplemental aid to the driver. It is not a replacement for the driver's attention to traffic conditions or responsibility to drive safely. It cannot prevent accidents due to carelessness or dangerous driving techniques.**
- **The Intelligent Emergency Braking with Pedestrian Detection system does not function in all driving, traffic, weather and road conditions.**

The Intelligent Emergency Braking with Pedestrian Detection system can assist the driver when there is a risk of a forward collision with the vehicle ahead in the traveling lane or with a pedestrian ahead in the traveling lane.

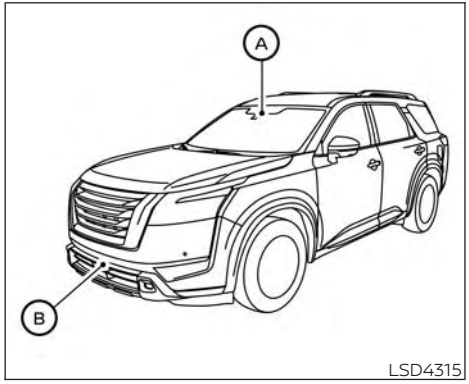

The Intelligent Emergency Braking with Pedestrian Detection system uses a radar sensor located on the front of the vehicle Ⓑ to measure the distance to the vehicle ahead in the same lane. For pedestrians, the Intelligent Emergency Braking with Pedestrian Detection system uses a camera installed behind the windshield Ⓐ in addition to the radar sensor.

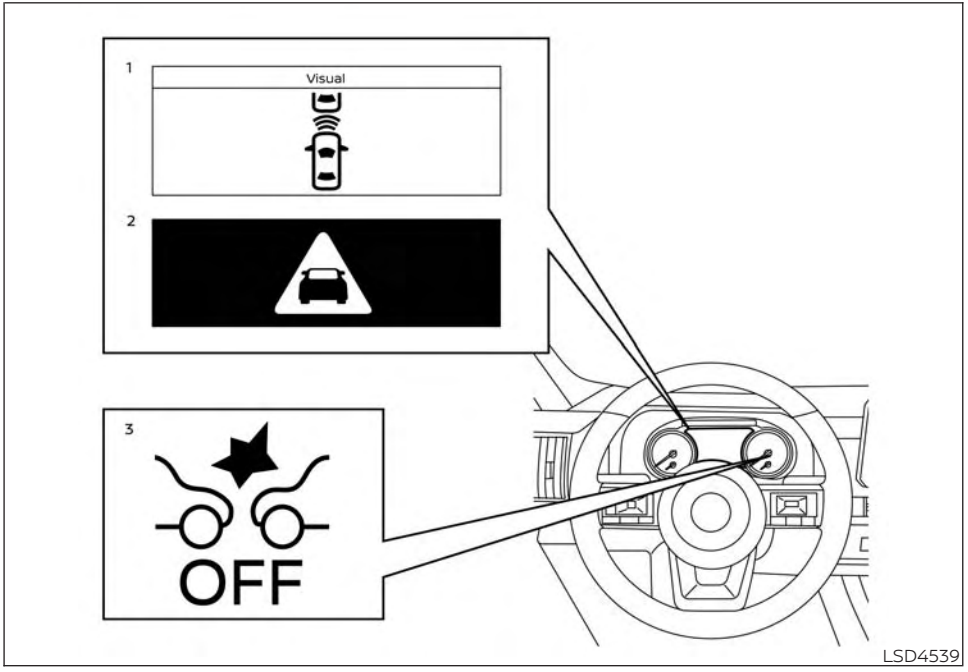

For vehicles with the 7 inch (18 cm) display

INTELLIGENT EMERGENCY BRAKING WITH PEDESTRIAN DETECTION SYSTEM OPERATION

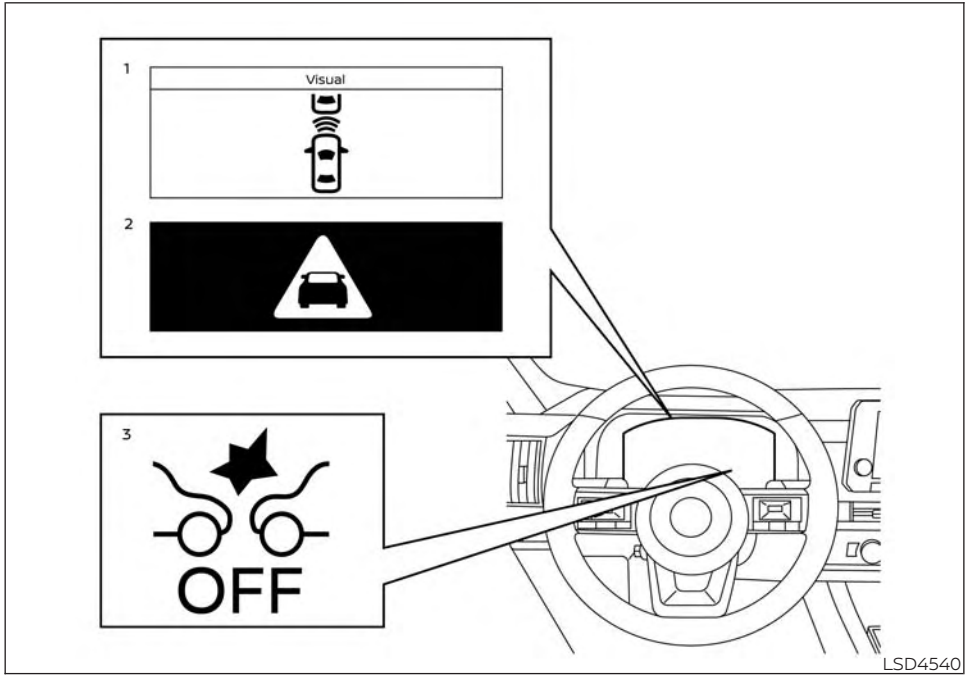

For vehicles with the 12.3 inch (31.2 cm) display

1. Vehicle ahead detection indicator
2. Intelligent Emergency Braking with Pedestrian Detection emergency warning indicator
3. Intelligent Emergency Braking with Pedestrian Detection system warning light

The Intelligent Emergency Braking with Pedestrian Detection system operates at speeds above approximately 5 km/h (3 mph). For the pedestrian detection function, the system operates at speeds between 10 – 60 km/h (6 – 37 mph).

If a risk of a forward collision is detected, the Intelligent Emergency Braking with Pedestrian Detection system will firstly provide the warning to the driver by flashing the vehicle ahead detection indicator (yellow) in the vehicle information display and providing an audible alert. If the driver applies the brakes quickly and forcefully after the warning, and the Intelligent Emergency Braking with Pedestrian Detection system detects that there is still the possibility of a forward collision, the system will automatically increase the braking force.

If the driver does not take action, the Intelligent Emergency Braking with Pedestrian Detection system issues the second visual (flashing) (red and white) and audible warning. If the driver releases the accelerator pedal, then the system applies partial braking. If the risk of a collision becomes imminent, the Intelligent Emergency Braking with Pedestrian Detection system applies harder braking automatically.

While the Intelligent Emergency Braking with Pedestrian Detection system is operating, you may hear the sound of brake operation. This is normal and indicates that the Intelligent Emergency Braking with Pedestrian Detection system is operating properly.

NOTE:

The vehicle's brake lights come on when any braking is performed by the Intelligent Emergency Braking with Pedestrian Detection system.

Depending on vehicle speed and distance to the vehicle or pedestrian ahead, as well as driving and roadway conditions, the system may help the driver avoid a forward collision or may help mitigate the consequences if a collision should be unavoidable. If the driver is handling the steering wheel, accelerating or braking, the Intelligent Emergency Braking with Pedestrian Detection system will function later or will not function.

The automatic braking will cease under the following conditions:

- When the steering wheel is turned to avoid a collision.
- When the accelerator pedal is depressed.
- When there is no longer a vehicle or a pedestrian detected ahead.

If the Intelligent Emergency Braking with Pedestrian Detection system has stopped the vehicle, the vehicle will remain at a standstill for approximately 2 seconds before the brakes are released.

TURNING THE INTELLIGENT EMERGENCY BRAKING WITH PEDESTRIAN DETECTION SYSTEM ON/OFF

Perform the following steps to enable or disable the Intelligent Emergency Braking with Pedestrian Detection system.

For vehicles equipped with Rear Automatic Braking:

1. Press the ◀▶ button until "Settings" displays in the vehicle information display. Use the scroll dial to select "Driver Assistance." Then press the OK button.
2. Select "Emergency Assist" and press the OK button.
3. Select "Front" and press the OK button to turn the system on or off.

For vehicles NOT equipped with Rear Automatic Braking:

1. Press the ◀▶ button until "Settings" displays in the vehicle information display. Use the scroll dial to select "Driver Assistance." Then press the OK button.
2. Select "Emergency Brake" and press the OK button to turn the system on or off.

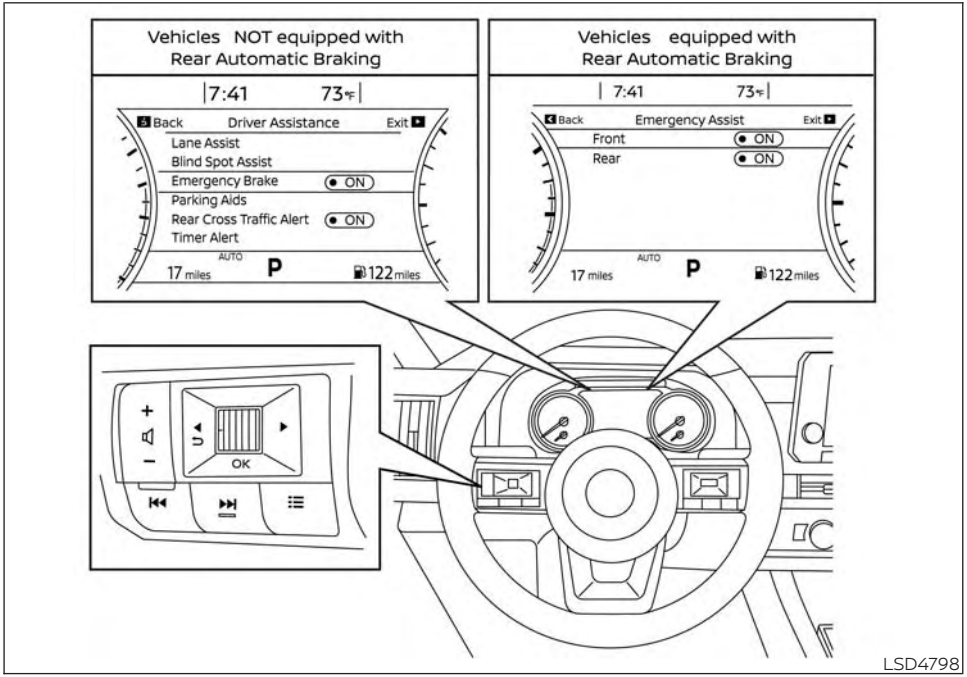

For vehicles with the 7 inch (18 cm) display

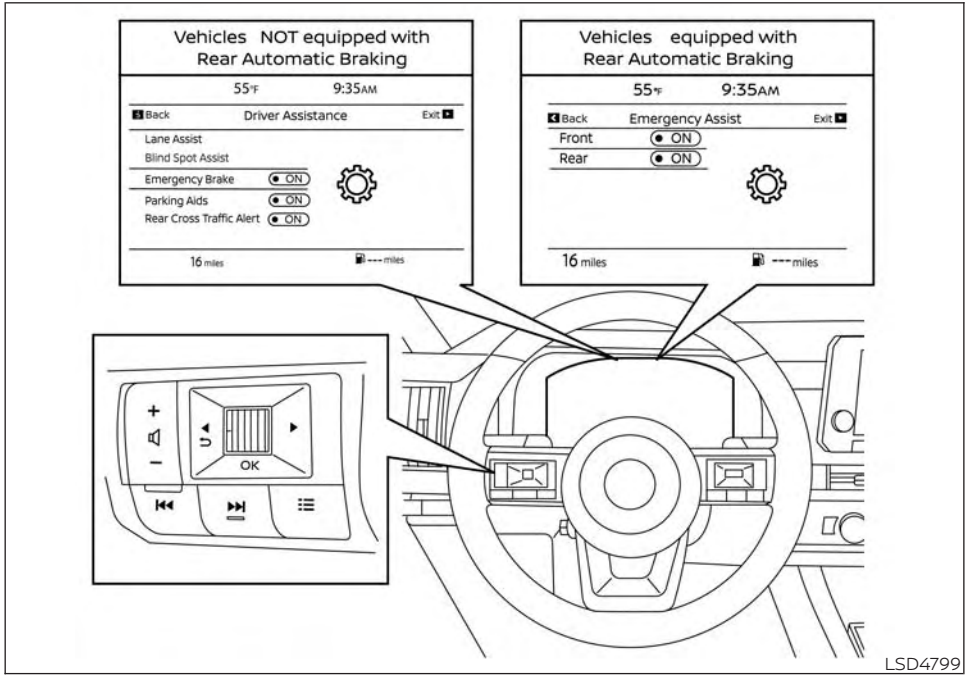

For vehicles with the 12.3 inch (31.2 cm) display

When the Intelligent Emergency Braking with Pedestrian Detection system is turned off, the Intelligent Emergency Braking with Pedestrian Detection system warning light illuminates.

NOTE:

- **The Intelligent Emergency Braking with Pedestrian Detection system will be automatically turned on when the engine is restarted.**
- **The Intelligent Forward Collision Warning system is integrated into the Intelligent Emergency Braking with Pedestrian Detection system. There is not a separate selection in the vehicle information display for the Intelligent Forward Collision Warning system. When the Intelligent Emergency Braking with Pedestrian Detection system is turned off, the Intelligent Forward Collision Warning system is also turned off.**

INTELLIGENT EMERGENCY BRAKING WITH PEDESTRIAN DETECTION SYSTEM LIMITATIONS

⚠ WARNING

Listed below are the system limitations for the Intelligent Emergency Braking with Pedestrian Detection system. Failure to operate the vehicle in accordance with these system limitations could result in serious injury or death.

- **The Intelligent Emergency Braking with Pedestrian Detection system cannot detect all vehicles, pedestrians or cyclists under all conditions.**
- **The Intelligent Emergency Braking with Pedestrian Detection system does not detect the following:**
  - **Pedestrians that are small (for example, children), in a sitting position, operating toys/skateboards, on scooters or in wheelchairs, or not in an upright standing or walking position.**
  - **Animals of any size.**
  - **Obstacles (for examples, cargo or debris) on the roadway or roadside.**
  - **Oncoming or crossing vehicles.**
  - **Vehicles where the tires are difficult to see or the shape of the rear of the vehicle is unclear or obstructed.**
  - **Parked vehicles.**
- **The Intelligent Emergency Braking with Pedestrian Detection system has some performance limitations.**
  - **If a stationary vehicle is in the vehicle's path, the system will not function when the vehicle approaches the stationary vehicle at speeds over approximately 80 km/h (50 mph).**
  - **Pedestrian and cyclist detection will not function when the vehicle is driven at speeds over approximately 60 km/h (37 mph) or below approximately 10km/h (6 mph).**
- **For pedestrians, the Intelligent Emergency Braking with Pedestrian Detection system will not issue the first warning.**
- **The Intelligent Emergency Braking with Pedestrian Detection system may not function properly or detect a vehicle, pedestrian or cyclist ahead in the following conditions:**
  - **In poor visibility conditions (such as rain, snow, fog, dust storms, sand storms, smoke, and road spray from other vehicles).**
  - **If dirt, ice, snow, fog or other material is covering the radar sensor area or camera area of windshield.**
  - **If a strong light (for example, sunlight or high beams) enters the front camera or a sudden change in brightness occurs (for example, entering a tunnel or driving in lightning).**
  - **In dark or dimly lit conditions, such as at night or in tunnels, including cases where your vehicle's headlights are off or dim, or the tail lights of the vehicle ahead are off.**
  - **When the direction of the camera is misaligned.**

- When driving on a steep downhill slope, on roads with sharp curves, and/or bumpy or dirt roads.
- If there is interference by other radar sources.
- When your vehicle's position or movement is changed quickly or significantly (for example, lane change, turning vehicle, abrupt steering, sudden acceleration or deceleration).
- When your vehicle or the vehicle, pedestrian or cyclist ahead moves quickly or significantly such that the system cannot detect and react in time (for example, pedestrian moving quickly toward the vehicle at close range, vehicle cutting in, changing lanes, making a turn, steering abruptly, sudden acceleration or deceleration).
- When the vehicle, pedestrian or cyclist is offset from the vehicle's forward path.
- If the speed difference between the two vehicles is small.
- The pedestrian's profile is partially obscured or unidentifiable; for example, due to transporting luggage, pushing a stroller, wearing bulky or very loose-fitting clothing or accessories, or being in a unique posture (such as raising hands).
- There is poor contrast of a person to the background, such as having clothing color or pattern which is similar to the background.
- For approximately 15 seconds after starting the engine.
- If the vehicle ahead has a unique or unusual shape, extremely low or high clearance heights, or unusual cargo loading or is narrow (for example, a motorcycle).
- When the vehicle, pedestrian or cyclist is located near a traffic sign, a reflective area (for example, water on road), or is in a shadow.
- When multiple pedestrians or cyclists are grouped together.
- When the view of the pedestrian or cyclist is obscured by a vehicle or other object.
- While towing a trailer or other vehicle.

- The system performance may be degraded in the following conditions:
  - The vehicle is driven on a slippery road.
  - The vehicle is driven on a slope.
  - Excessively heavy baggage is loaded in the rear seat or the cargo area of your vehicle.
- The system is designed to automatically check the sensor's (radar and camera) functionality, within certain limitations. The system may not detect some forms of obstruction of the sensor area such as ice, snow or stickers, for example. In these cases, the system may not be able to warn the driver properly. Be sure that you check, clean and clear sensor areas regularly.
- In some road and traffic conditions, the Intelligent Emergency Braking with Pedestrian Detection system may unexpectedly apply partial braking. When acceleration is necessary, depress the accelerator pedal to override the system.

- **The Intelligent Emergency Braking with Pedestrian Detection system may operate when a pattern, object, shadow or lights are detected that are similar to the outline of vehicles, pedestrians or cyclists, or if they are the same size and position as a vehicle or motorcycle's tail lights.**
- **The system may keep operating when the vehicle ahead is turning right or left.**
- **The system may operate when your vehicle is approaching and passing a vehicle ahead.**
- **Depending on the road shape (curved road, entrance and exit of the curve, winding road, lane regulation, under construction, etc.), the system may operate temporarily for the oncoming vehicle in front of your vehicle.**

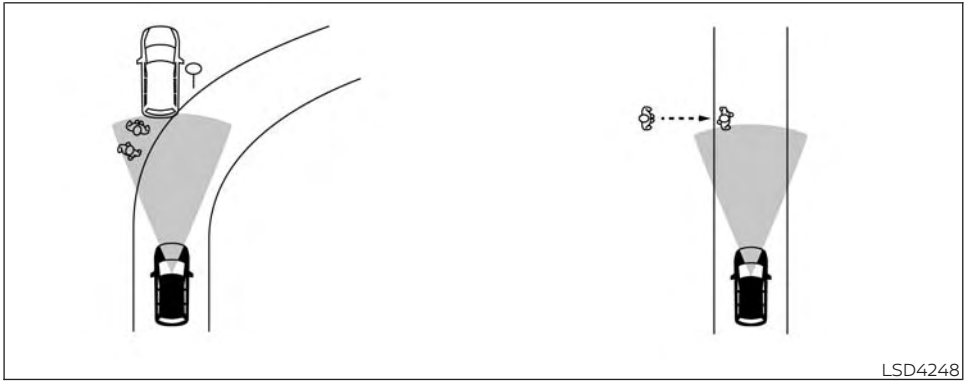

LSD4248

⚠WARNING

Listed below are the system limitations for the Intelligent Emergency Braking with Pedestrian Detection system. Failure to operate the vehicle in accordance with these system limitations could result in serious injury or death.

- **The Intelligent Emergency Braking with Pedestrian Detection system may react to:**
  - **objects on the roadside (traffic sign, guardrail, pedestrian, motorcycle, vehicle, etc.)**
  - **pedestrians when driving on the narrow alleys, etc.**
  - **pedestrians who temporarily protrude into or approaching the driving lane to avoid the obstacles on the road shoulder**
  - **objects above road (low bridge, traffic sign, etc.)**
  - **objects on the road surface (railroad track, grate, steel plate, etc.)**
  - **objects in the parking garage (beam, pillar, etc.)**
  - **pedestrians or motorcycles approaching the travelling lane**

- vehicles, pedestrians, motorcycles or objects in adjacent lanes or close to the vehicle
- oncoming pedestrians
- objects on the road (such as trees)

· **Braking distances increase on slippery surfaces.**

· **Excessive noise will interfere with the warning chime sound, and the chime may not be heard.**

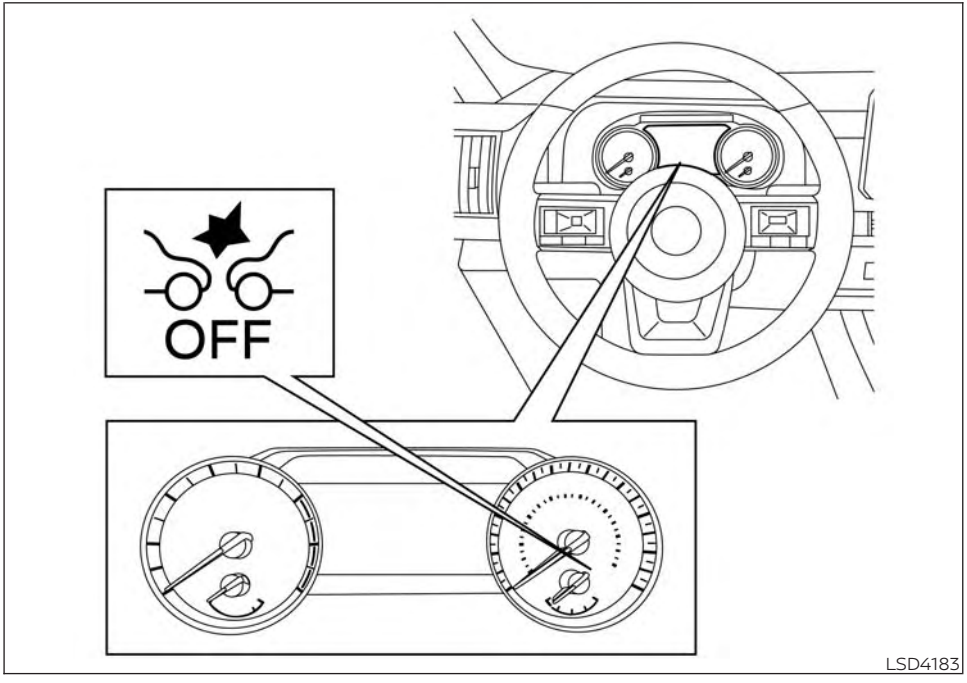

For vehicles with the 7 inch (18 cm) display

SYSTEM TEMPORARILY
UNAVAILABLE

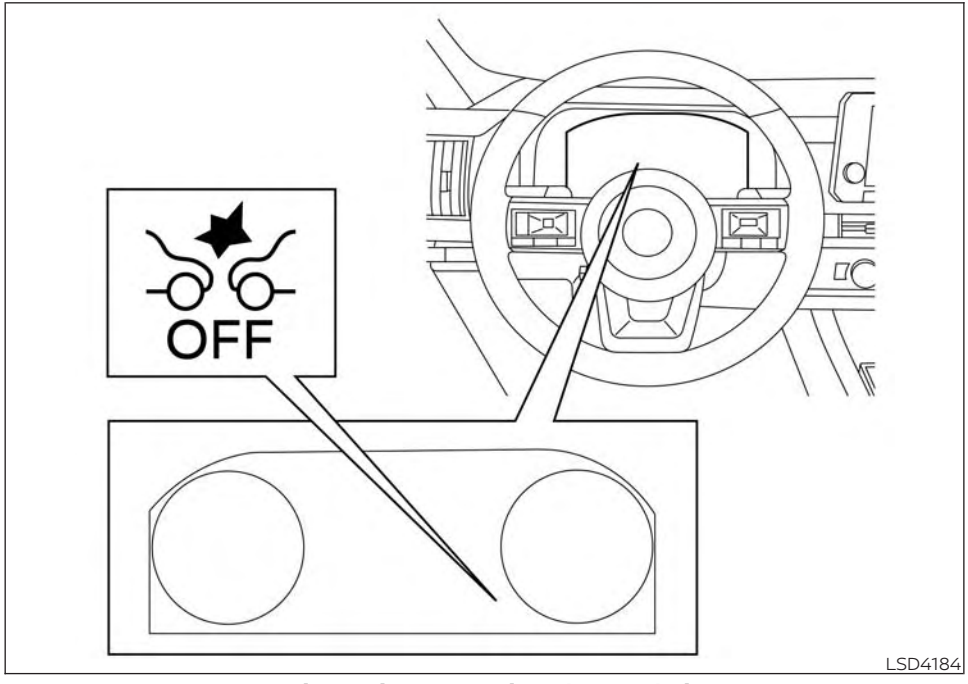

For vehicles with the 12.3 inch (31.2 cm) display

Condition A:

In the following conditions, the Intelligent Emergency Braking system warning light blinks and the system will be turned off automatically:

- The radar sensor picks up interference from another radar source.
- The camera area of the windshield is misted or frozen.
- Strong light is shining from the front.
- The cabin temperature is over approximately 40°C (104°F) in direct sunlight.
- The camera area of the windshield glass is continuously covered with dirt, etc.

Action to take

When the above conditions no longer exist, the Intelligent Emergency Braking system will resume automatically.

NOTE:

When the inside of the windshield on the camera area is misted or frozen, it will take a period of time to remove it after the A/C turns on. If dirt appears on this area, it is recommended that you visit a NISSAN dealer.

Condition B:

When there is inclement weather (rain, fog, snow, etc.) blocking the front radar sensor, the Intelligent Emergency Braking system will be canceled, the chime will sound and the "Forward Driving Aids temporarily disabled Front Sensor blocked See Owner's Manual" or "Temporarily Disabled Front Radar Blocked" warning message will appear in the vehicle information display.

Action to take:

When the conditions listed above are no longer present, the warning message will no longer be available in the vehicle information display. If the "Forward Driving Aids temporarily disabled Front Sensor blocked See Owner's Manual" or "Temporarily Disabled Front Radar Blocked" warning message continues to be displayed, have the system checked. It is recommended that you visit a NISSAN dealer for this service.

Condition C:

When the radar sensor of the front bumper is covered with dirt or is obstructed, the Intelligent Emergency Braking system will automatically be canceled. The chime will sound and the "Forward Driving Aids temporarily disabled Front Sensor blocked See Owner's Manual" or "Temporarily Disabled Front Radar Blocked" warning message will appear in the vehicle information display.

Action to take:

If the warning message appears, stop the vehicle in a safe place, place the shift position in the P (Park) position, and turn the engine off. When the radar signal is temporarily interrupted, clean the sensor area of the front bumper and restart the engine. If the "Forward Driving Aids temporarily disabled Front Sensor blocked See Owner's Manual" or "Temporarily Disabled Front Radar Blocked" warning message continues to be displayed, have the system checked. It is recommended that you visit a NISSAN dealer for this service.

Condition D

When driving on roads with limited road structures or buildings (for example, long bridges, deserts, snowfields, driving next to long walls), the system may illuminate the system warning light and display the "Forward Driving Aids temporarily disabled Front Sensor blocked See Owner's Manual" or "Temporarily Disabled Front Radar Blocked" message.

Action to take:

When the above driving conditions no longer exist, turn the system back on.

NOTE:
If the Intelligent Emergency Braking system stops working, the Intelligent Forward Collision Warning system will also stop working.



LSD4448

SYSTEM MALFUNCTION

If the Intelligent Emergency Braking with Pedestrian Detection system malfunctions, it will be turned off automatically, a chime will sound, the Intelligent Emergency Braking with Pedestrian Detection system warning light (orange) will illuminate and the warning message [Malfunction] will appear in the vehicle information display.

Action to take

If the warning light (orange) comes on, stop the vehicle in a safe location, turn the engine off and restart the engine. If the warning light continues to illuminate, have the Intelligent Emergency Braking with Pedestrian Detection system checked. It is recommended that you visit a NISSAN dealer for this service.

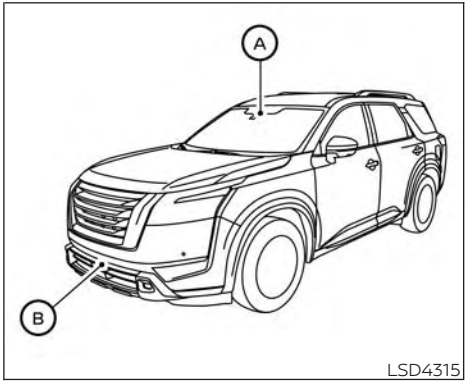

LSD4315

SYSTEM MAINTENANCE

The radar sensor is located on the front of the vehicle Ⓑ. The camera is located on the upper side of the windshield Ⓐ.

To keep the Intelligent Emergency Braking with Pedestrian Detection system operating properly, be sure to observe the following:

- Always keep the sensor areas of the front bumper and windshield clean.
- Do not strike or damage the areas around the sensors (e.g., bumper, windshield).

- Do not cover or attach stickers, or install any accessory near the sensors. This could block sensor signals and/or cause failure or malfunction.
- Do not attach metallic objects near the radar sensor (brush guard, etc.). This could cause failure or malfunction.
- Do not place reflective materials, such as white paper or a mirror, on the instrument panel. The reflection of sunlight may adversely affect the camera unit's detection capability.
- Do not alter, remove or paint the front bumper. Before customizing or restoring the front bumper, it is recommended that you visit a NISSAN dealer.

Radio frequency statement

For Mexico

La operación de este equipo está sujeta a las siguientes dos condiciones:

1. es posible que este equipo o dispositivo no cause interferencia perjudicial y
2. este equipo o dispositivo debe aceptar cualquier interferencia, incluyendo la que pueda causar su operación no deseada.

For United Arabian Emirates (AGCC), Abu Dhabi, Dubai, Sharjah, Ras al-Khaimah, Umm al-Qawain, Ajman and Fujairah

ER66978/18


LSD3128

For Australia

INTELLIGENT FORWARD COLLISION WARNING (if so equipped)

⚠ WARNING

Failure to follow the warnings and instructions for proper use of the Intelligent Forward Collision Warning system could result in serious injury or death.

- **The Intelligent Forward Collision Warning system can help warn the driver before a collision occurs but will not avoid a collision. It is the driver's responsibility to stay alert, drive safely and be in control of the vehicle at all times.**

The Intelligent Forward Collision Warning system can help alert the driver when there is a sudden braking of a second vehicle traveling in front of the vehicle ahead in the same lane.

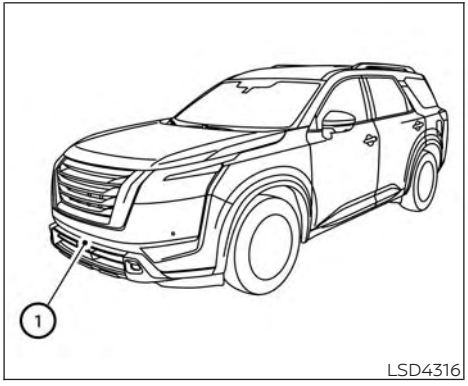

The Intelligent Forward Collision Warning system uses a radar sensor ① located on the front of the vehicle to measure the distance to the vehicle ahead in the same lane.

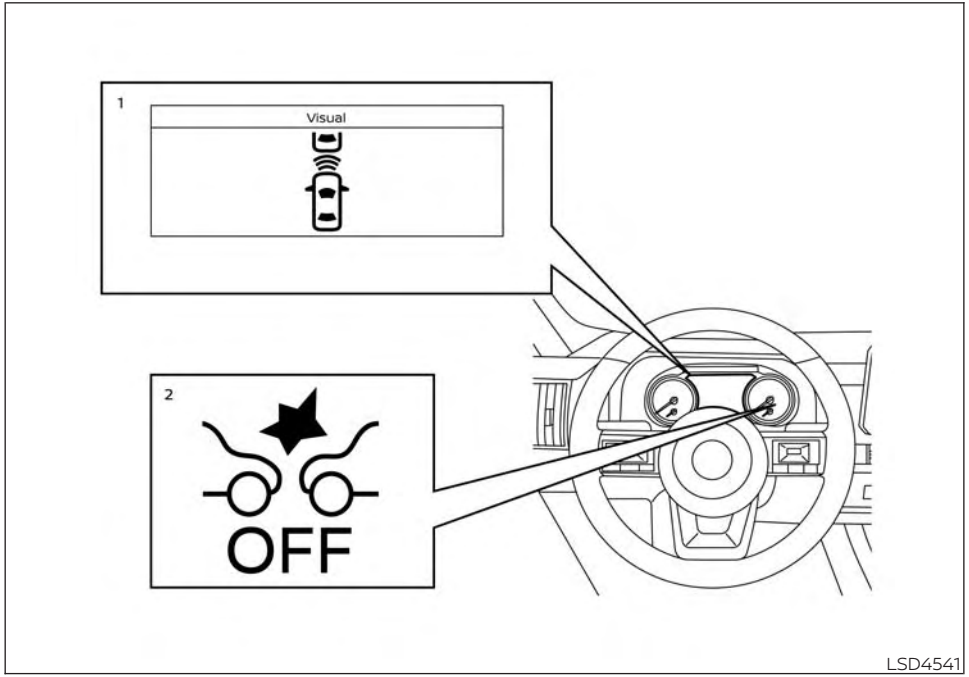

For vehicles with the 7 inch (18 cm) display

1. Vehicle ahead detection indicator
2. Intelligent Emergency Braking with Pedestrian Detection system warning light

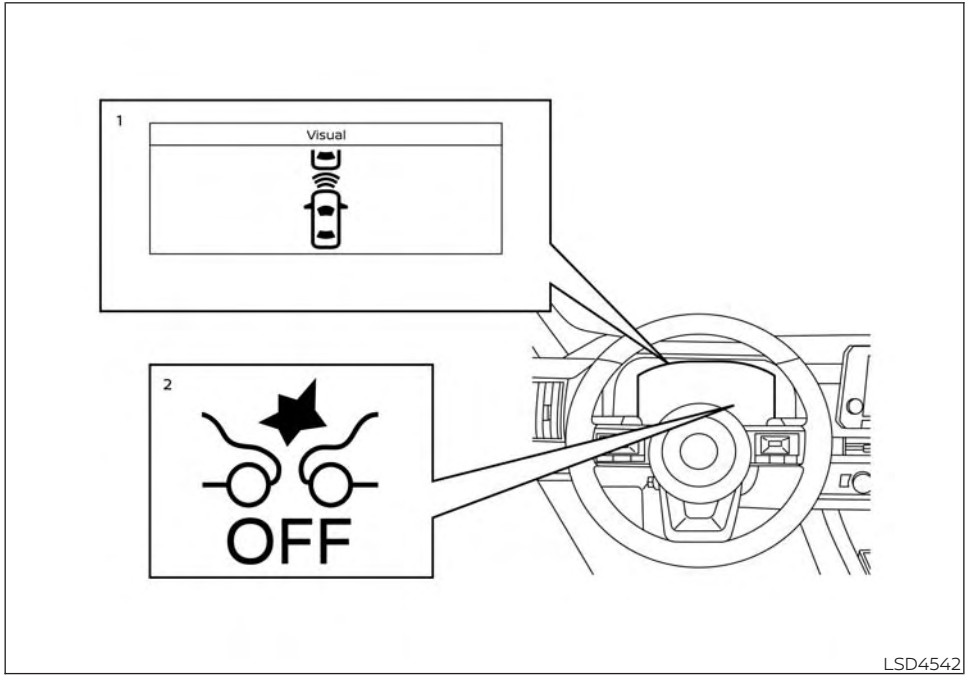

For vehicles with the 12.3 inch (31.2 cm) display

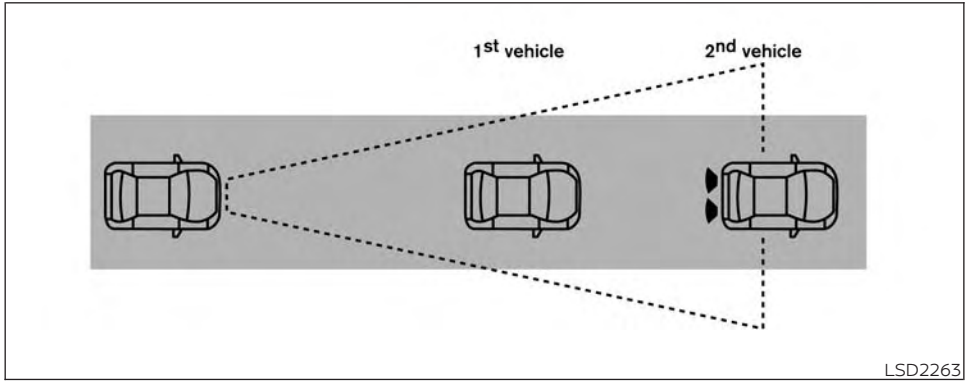

INTELLIGENT FORWARD COLLISION WARNING SYSTEM OPERATION

The Intelligent Forward Collision Warning system operates at speeds above approximately 5 km/h (3 mph).

If there is a potential risk of a forward collision, the Intelligent Forward Collision Warning system will warn the driver by blinking the vehicle ahead detection indicator, and sounding an audible alert.

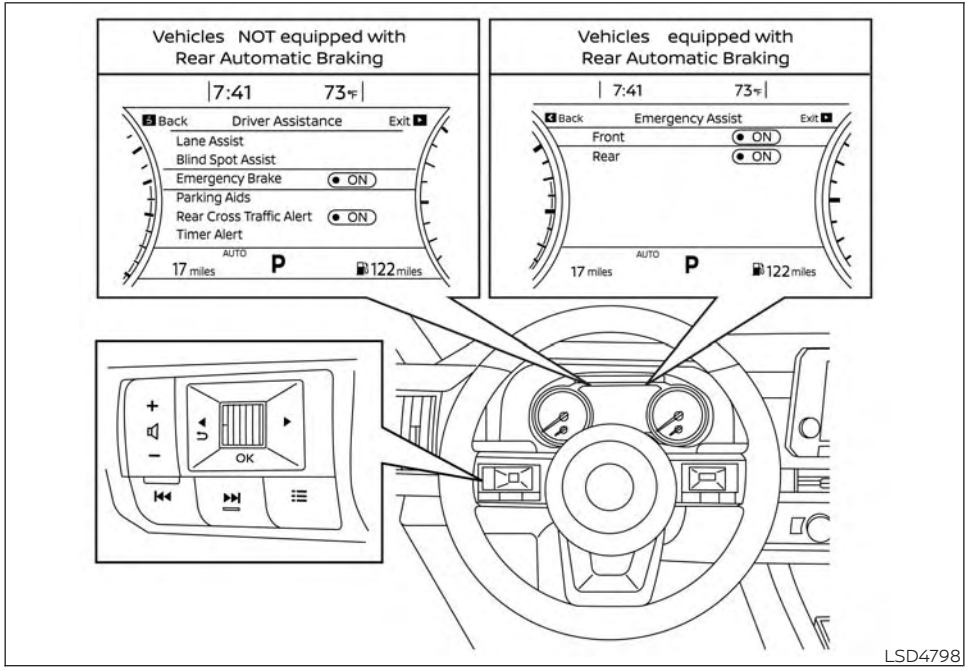

For vehicles with the 7 inch (18 cm) display

TURNING THE INTELLIGENT FORWARD COLLISION WARNING SYSTEM ON/OFF

Perform the following steps to turn the Intelligent Forward Collision Warning system ON or OFF.

For vehicles equipped with Rear Automatic Braking:

1. Press the ◀▶ button until "Settings" displays in the vehicle information display. Use the scroll dial to select "Driver Assistance." Then press the OK button.
2. Select "Emergency Assist" and press the OK button.
3. Select "Front" and press the OK button to turn the system on or off.

For vehicles NOT equipped with Rear Automatic Braking:

1. Press the ◀▶ button until "Settings" displays in the vehicle information display. Use the scroll dial to select "Driver Assistance." Then press the OK button.
2. Select "Emergency Brake" and press the OK button to turn the system on or off.

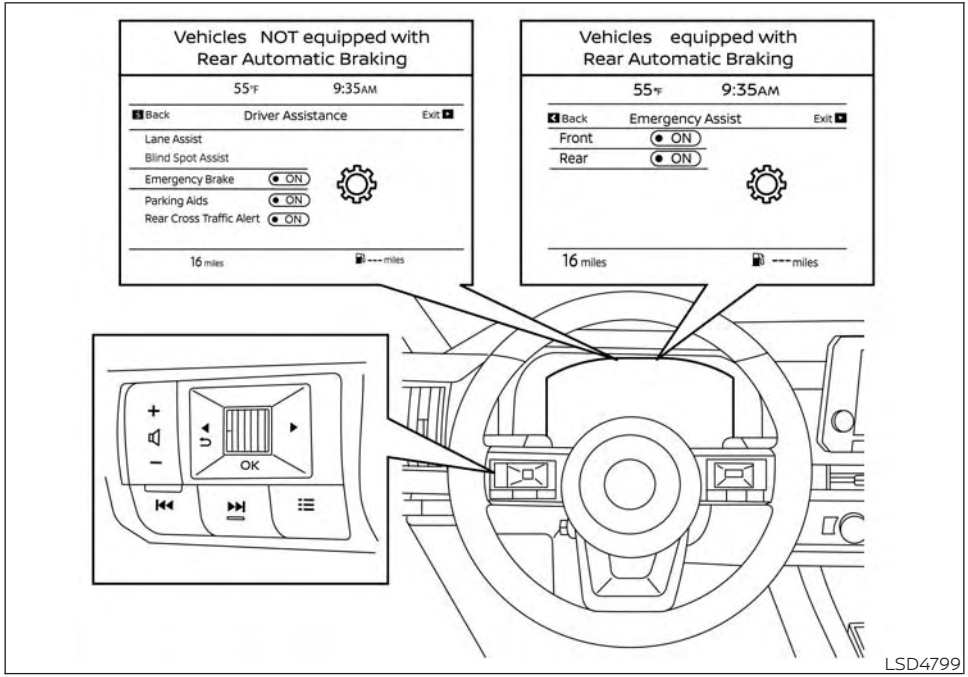

For vehicles with the 12.3 inch (31.2 cm) display

When the Intelligent Forward Collision Warning system is turned off, the Intelligent Emergency Braking with Pedestrian Detection system warning light illuminates.

NOTE:

- **The Intelligent Forward Collision Warning system will be automatically turned on when the engine is restarted.**
- **The Intelligent Forward Collision Warning system is integrated into the Intelligent Emergency Braking with Pedestrian Detection system. There is not a separate selection in the vehicle information display for the Intelligent Forward Collision Warning system. When the Intelligent Emergency Braking with Pedestrian Detection is turned off, the Intelligent Forward Collision Warning system is also turned off.**

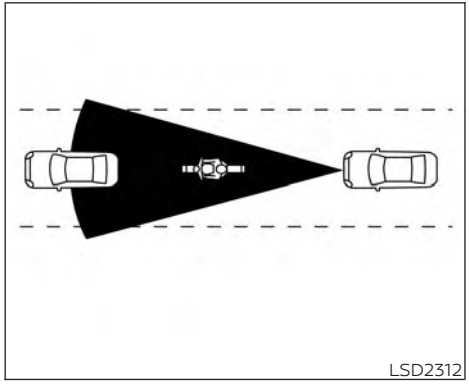

Illustration A

INTELLIGENT FORWARD COLLISION WARNING SYSTEM LIMITATIONS

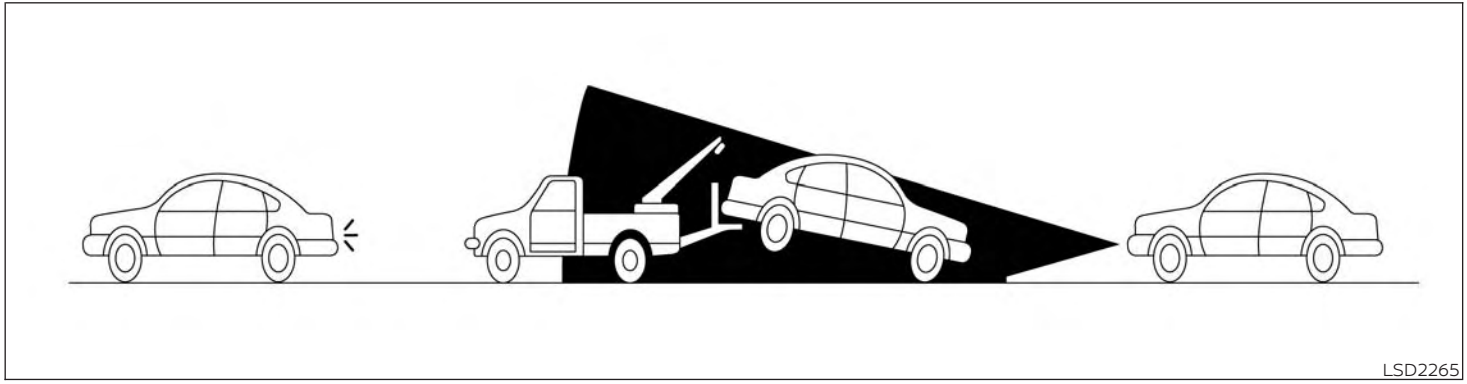

Illustration B

⚠ WARNING

Listed below are the system limitations for the Intelligent Forward Collision Warning system. Failure to operate the vehicle in accordance with these system limitations could result in serious injury or death.

- **The Intelligent Forward Collision Warning system cannot detect all vehicles under all conditions.**
- **The radar sensor does not detect the following objects:**
  - **Pedestrians, animals or obstacles in the roadway**
  - **Oncoming vehicles**
  - **Crossing vehicles**
- **(Illustration A) The Intelligent Forward Collision Warning system does not function when a vehicle ahead is a narrow vehicle, such as a motorcycle.**
- **The radar sensor may not detect a vehicle ahead in the following conditions:**
  - **Snow or heavy rain**
  - **Dirt, ice, snow or other material covering the radar sensor.**
  - **Interference by other radar sources.**
  - **Snow or road spray from traveling vehicles.**
  - **Driving in a tunnel**
  - **Towing a trailer**

- **(Illustration B) When the vehicle ahead is being towed.**
- **(Illustration C) When the distance to the vehicle ahead is too close, the beam of the radar sensor is obstructed.**
- **(Illustration D) When driving on a steep downhill slope or roads with sharp curves.**
- **The system is designed to automatically check the sensor's functionality, within certain limitations. The system may not detect some forms of obstruction of the sensor area such as ice, snow, stickers, etc. In these cases, the system may not be able to warn the driver properly. Be sure that you check, clean and clear the sensor area regularly.**
- **Excessive noise will interfere with the warning chime sound, and the chime may not be heard.**

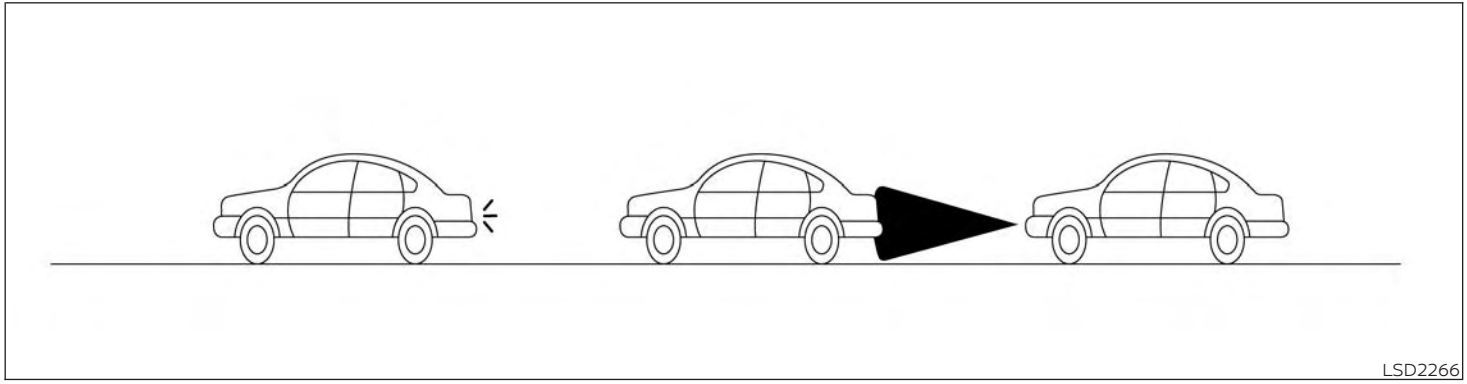

Illustration C

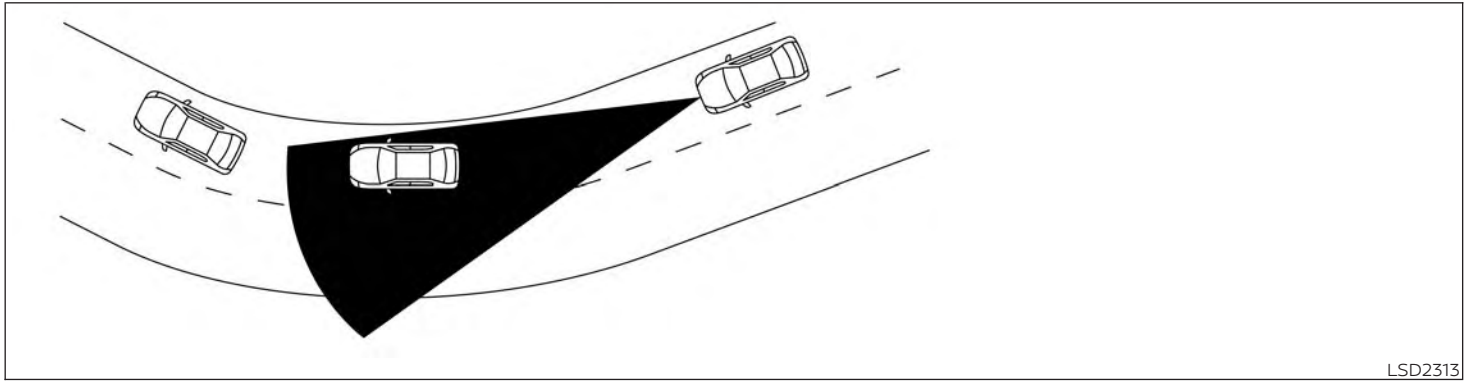

Illustration D

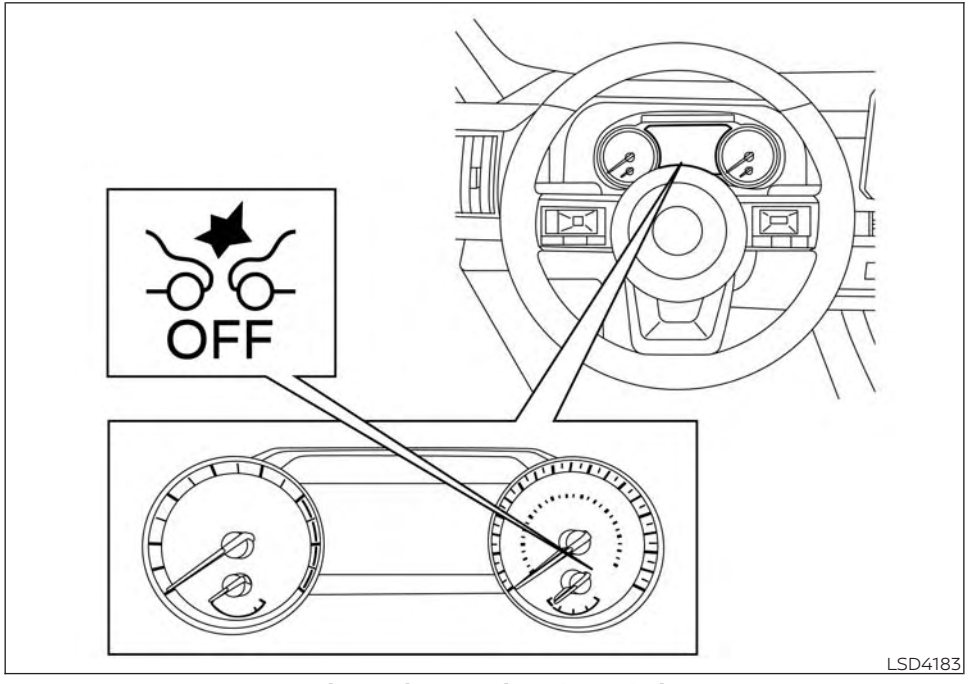

For vehicles with the 7 inch (18 cm) display

SYSTEM TEMPORARILY UNAVAILABLE

Condition A

When the radar sensor picks up interference from another radar source, making it impossible to detect a vehicle ahead, the Intelligent Forward Collision Warning system is automatically turned off.

The Intelligent Emergency Braking with Pedestrian Detection system warning light (orange) will illuminate.

Action to take

When the above conditions no longer exist, the Intelligent Forward Collision Warning system will resume automatically.

Condition B

When there is inclement weather (rain, fog, snow, etc.) blocking the front radar sensor, the Intelligent Forward Collision Warning system will automatically be canceled, the chime will sound and the "Forward Driving Aids temporarily disabled Front Sensor blocked See Owner's Manual" or "Temporarily Disabled Front Radar Blocked" warning message will appear in the vehicle information display.

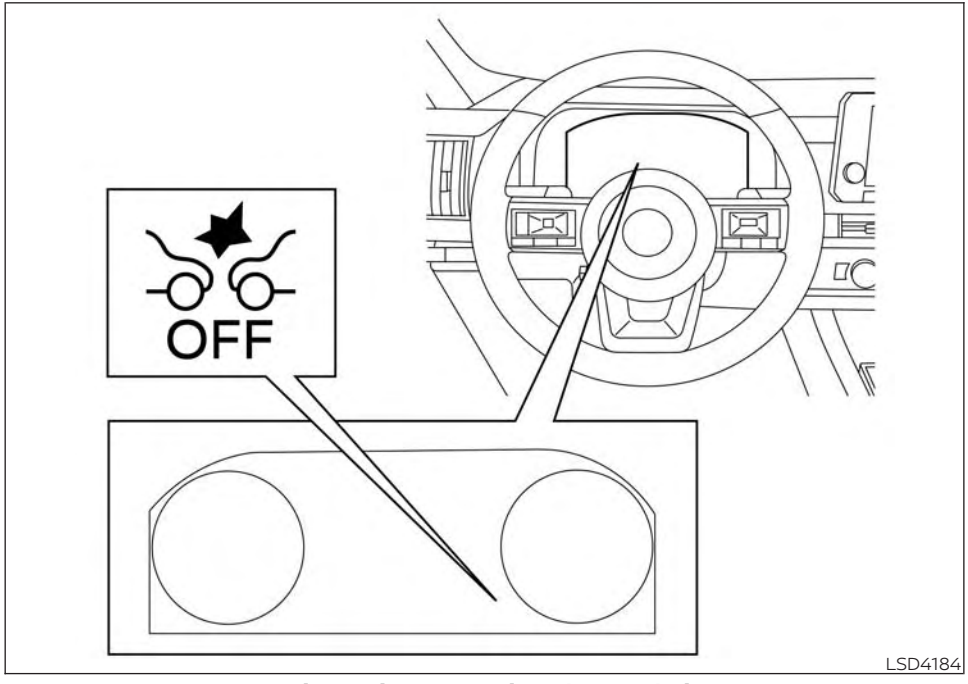

For vehicles with the 12.3 inch (31.2 cm) display

Action to take:

When the conditions listed above are no longer present, the warning message will no longer be available in the vehicle information display. If the "Forward Driving Aids temporarily disabled Front Sensor blocked See Owner's Manual" or "Temporarily Disabled Front Radar Blocked" warning message continues to be displayed, have the system checked. It is recommended that you visit a NISSAN dealer for this service.

Condition C

When the radar sensor of the front bumper is covered with dirt or is obstructed, the Intelligent Forward Collision Warning system will automatically be canceled. The chime will sound and the "Forward Driving Aids temporarily disabled Front Sensor blocked See Owner's Manual" or "Temporarily Disabled Front Radar Blocked" warning message will appear in the vehicle information display.

Action to take:

If the warning message appears, stop the vehicle in a safe place, place the shift position in the P (Park) position, and turn the engine off. When the radar signal is temporarily interrupted, clean the sensor area of the front bumper and restart the engine.

If the "Forward Driving Aids temporarily disabled Front Sensor blocked See Owner's Manual" or "Temporarily Disabled Front Radar Blocked" warning message continues to be displayed, have the system checked. It is recommended that you visit a NISSAN dealer for this service.

Condition D

When driving on roads with limited road structures or buildings (for example, long bridges, deserts, snowfields, driving next to long walls), the system may illuminate the system warning light and display the "Forward Driving Aids temporarily disabled Front Sensor blocked See Owner's Manual" or "Temporarily Disabled Front Radar Blocked" warning message.

Action to take:

When the above driving conditions no longer exist, turn the system back on.

NOTE:

If the Intelligent Emergency Braking with Pedestrian Detection system stops working, the Intelligent Forward Collision Warning system will also stop working.



LSD4448

SYSTEM MALFUNCTION

If the Intelligent Forward Collision Warning system malfunctions, it will be turned off automatically, a chime will sound, the Intelligent Emergency Braking with Pedestrian Detection system warning light (orange) will illuminate and the warning message [Malfunction] will appear in the vehicle information display.

Action to take

If the warning light (orange) comes on, stop the vehicle in a safe location, turn the engine off and restart the engine. If the warning light continues to illuminate, have the Intelligent Forward Collision Warning system checked. It is recommended that you visit a NISSAN dealer for this service.

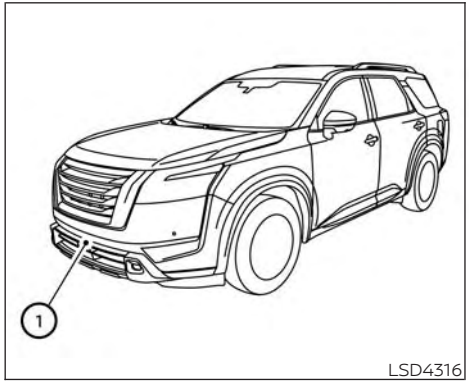

SYSTEM MAINTENANCE

The sensor ① is located on the front of the vehicle.

To keep the system operating properly, be sure to observe the following:

- Always keep the sensor area of the front bumper/emblem clean.
- Do not strike or damage the areas around the sensor.
- Do not cover or attach stickers or similar objects on the front bumper near the sensor area. This could cause failure or malfunction.
- Do not attach metallic objects near the sensor area (brush guard, etc.). This could cause failure or malfunction.
- Do not alter, remove or paint the front bumper. Before customizing or restoring the front bumper, it is recommended that you visit a NISSAN dealer.

Radio frequency statement

For Mexico

La operación de este equipo está sujeta a las siguientes dos condiciones:

1. es posible que este equipo o dispositivo no cause interferencia perjudicial y
2. este equipo o dispositivo debe aceptar cualquier interferencia, incluyendo la que pueda causar su operación no deseada.

For United Arabian Emirates (AGCC), Abu Dhabi, Dubai, Sharjah, Ras al-Khaimah, Umm al-Qawain, Ajman and Fujairah

ER66978/18



For Australia

INTELLIGENT DRIVER ALERTNESS (if so equipped)

⚠ WARNING

Failure to follow the warnings and instructions for proper use of the Intelligent Driver Alertness system could result in serious injury or death.

- **The Intelligent Driver Alertness system is only a warning to inform the driver of a potential lack of driver attention or drowsiness. It will not steer the vehicle or prevent loss of control.**
- **The Intelligent Driver Alertness system does not detect and provide an alert of the driver's lack of attention or fatigue in every situation.**
- **It is the driver's responsibility to:**
  - **stay alert,**
  - **drive safely,**
  - **keep the vehicle in the traveling lane,**
  - **be in control of the vehicle at all times,**
  - **avoid driving when tired,**
  - **avoid distractions (texting, etc.).**

The Intelligent Driver Alertness system helps alert the driver if the system detects a lack of attention or driving fatigue.

The system monitors driving style and steering behavior over a period of time, and it detects changes from the normal pattern. If the system detects that driver attention is decreasing over a period of time, the system uses audible and visual warnings to suggest that the driver take a break.

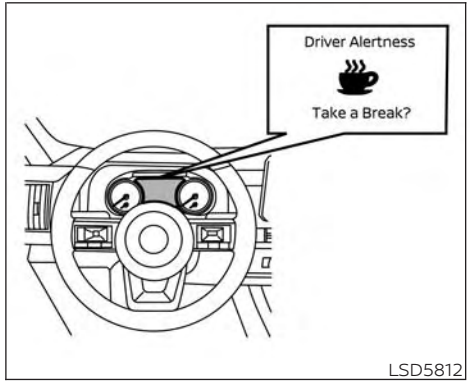

For vehicles with the 7 inch (18 cm) display

INTELLIGENT DRIVER ALERTNESS SYSTEM OPERATION

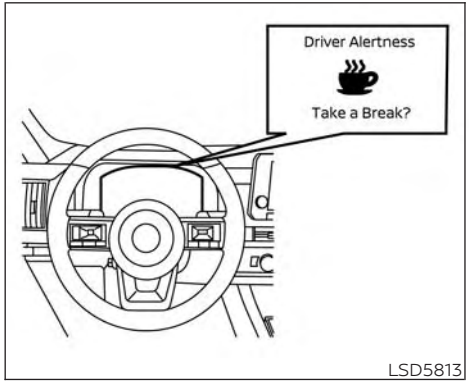

For vehicles with the 12.3 inch (31.2 cm) display

If the system detects driver fatigue or that driver attention is decreasing, the message "Take a break?" appears in the vehicle information display and a chime sounds when the vehicle is driven at speeds above 60 km/h (37 mph).

The system continuously monitors driver attention and can provide multiple warnings per trip.

The system resets and starts reassessing driving style and steering behavior when the ignition switch is cycled from the ON to the OFF position and back to the ON position.

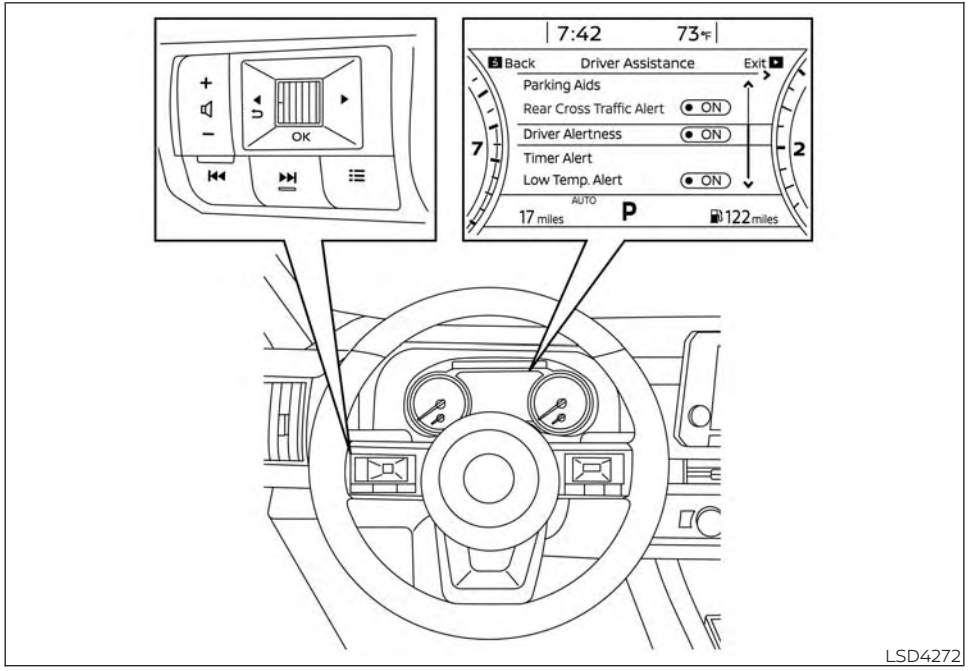

For vehicles with the 7 inch (18 cm) display

HOW TO ENABLE/DISABLE THE INTELLIGENT DRIVER ALERTNESS SYSTEM

Perform the following steps to enable or disable the Intelligent Driver Alertness system.

1. Press the ◀▶ button until "Settings" displays in the vehicle information display. Use the scroll dial to select "Driver Assistance." Then press the OK button.
2. Select "Driver Attention Alert" or "Driver Alertness" and press the OK button to turn the system on or off.

NOTE:
The setting will be retained even if the engine is restarted.

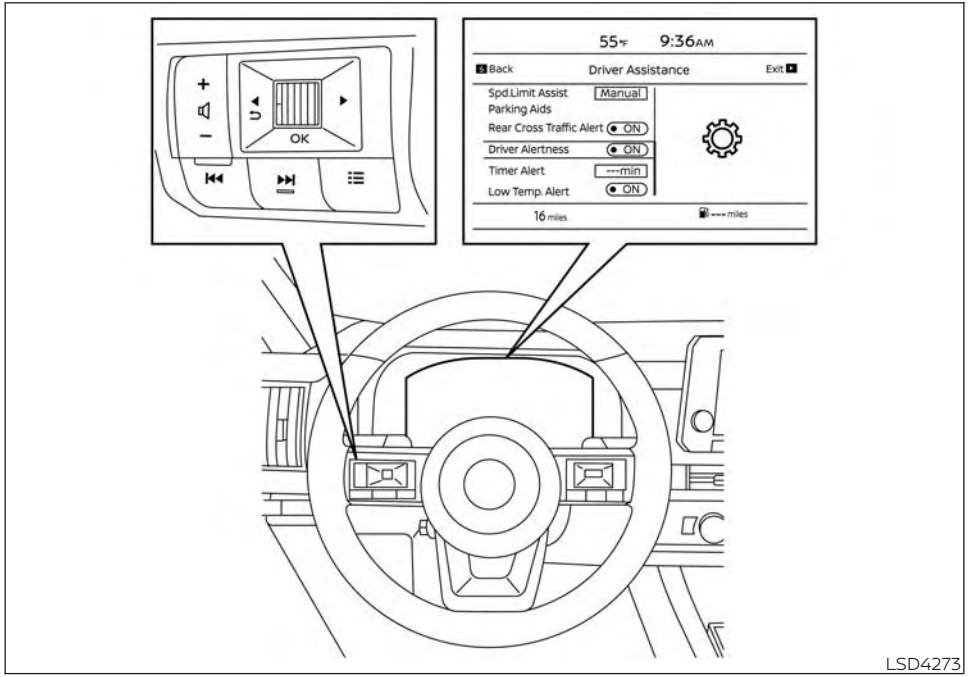

For vehicles with the 12.3 inch (31.2 cm) display

INTELLIGENT DRIVER ALERTNESS SYSTEM LIMITATIONS

⚠WARNING

Listed below are the system limitations for the Intelligent Driver Alertness system. Failure to operate the vehicle in accordance with these system limitations could result in serious injury or death.

- **The Intelligent Driver Alertness system may not operate properly and may not provide an alert in the following conditions:**
  - **Poor road conditions such as an uneven road surface or pot holes.**
  - **Strong side wind.**
  - **If you have adopted a sporty driving style with higher cornering speeds or higher rates of acceleration.**
  - **Frequent lane changes or changes to vehicle speed.**

- **The Intelligent Driver Alertness system will not provide an alert in the following conditions:**
  - **Vehicle speeds lower than 60 km/h (37 mph).**
  - **Short lapses of attention.**
  - **Instantaneous distractions such as dropping an object.**



System malfunction

If the Intelligent Driver Alertness system malfunctions, the system warning message will appear in the vehicle information display and the function will be stopped automatically.

Action to take

Stop the vehicle in a safe location, press the park button to engage the P (Park) position, turn the engine off and restart the engine. If the system warning message continues to appear, have the system checked. It is recommended that you visit a NISSAN dealer for this service.

BREAK-IN SCHEDULE

⚠ CAUTION

During the first 2,000 km (1,200 miles), follow these recommendations to obtain maximum engine performance and ensure the future reliability and economy of your new vehicle. Failure to follow these recommendations may result in shortened engine life and reduced engine performance.

- Avoid driving for long periods at constant speed, either fast or slow, and do not run the engine over 4,000 rpm.
- Do not accelerate at full throttle in any gear.
- Avoid quick starts.
- Avoid hard braking as much as possible.
- Do not tow a trailer for the first 805 kilometers (500 miles). Your engine, axle or other parts could be damaged.

INCREASING FUEL ECONOMY

- Keep your engine tuned up.
- Follow the recommended scheduled maintenance.
- Keep the tires inflated to the correct pressure. Low tire pressure increases tire wear and lowers fuel economy.
- Keep the wheels in correct alignment. Improper alignment increases tire wear and lowers fuel economy.
- Use the recommended SAE viscosity number. For additional information, see "Recommended SAE viscosity number" (P. 9-6).

INTELLIGENT 4X4 (if so equipped)

If any malfunction occurs in the Intelligent 4X4 system while the engine is running, messages appear in the vehicle information display.

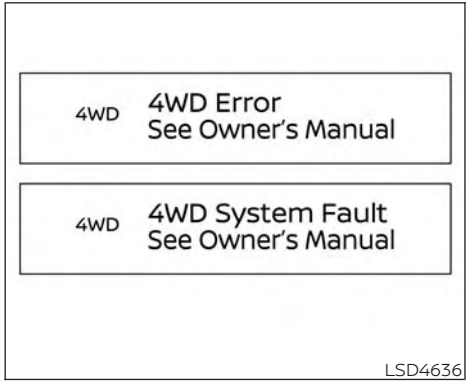

If the "4WD Error" or "4WD System Fault" warning appears, there may be a malfunction in the Intelligent 4X4 system. Reduce vehicle speed and have your vehicle checked. It is recommended that you visit a NISSAN dealer as soon as possible.

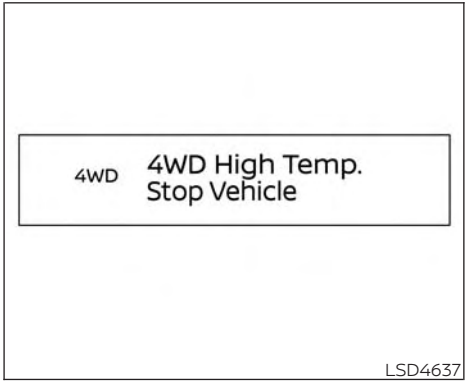

The "4WD High Temp. Stop Vehicle" (high temperature) warning appears when the oil temperature of the powertrain parts will increase due to the difference in rotation between the front and rear wheels is large (wheel slip), such as when driving the vehicle on rough roads, through sand or mud, or freeing a stuck vehicle. If this warning is displayed, stop the vehicle with the engine idling, as soon as it is safe to do so. In these cases, the 4WD changes to 2WD to protect the powertrain parts. Then if the warning turns off, you continue 4WD driving.

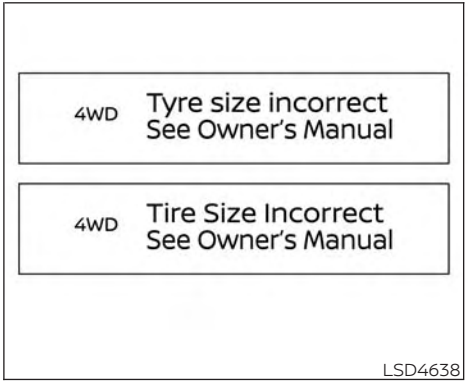

The "Tyre Size Incorrect" or "Tire Size Incorrect" warning may be displayed if there is a large difference between the diameters of front and rear wheels and tires. Pull off the road in a safe area, with the engine idling. Check that all tire sizes, brand, construction and tread pattern are the same, that the tire pressure is correct and that the tires are not excessively worn. If you have any problems, please change tires or adjust the correct tire pressure. Do not select the SNOW, MUD/RUT, or SAND modes with the Drive Mode Selector and do not drive fast.

If any warning message continues to be displayed, have your vehicle checked. It is recommended that you visit a NISSAN dealer as soon as possible.

⚠ WARNING

- **For 4WD equipped vehicles, do not attempt to raise two wheels off the ground and shift the transmission to any drive or reverse position with the engine running. Doing so may result in drivetrain damage or unexpected vehicle movement which could result in serious vehicle damage or personal injury.**
- **Do not attempt to test an 4WD equipped vehicle on a 2-wheel dynamometer (such as the dynamometers used by some states for emissions testing) or similar equipment even if the other two wheels are raised off the ground. Make sure that you inform the test facility personnel that your vehicle is equipped with 4WD before it is placed on a dynamometer. Using the wrong test equipment may result in drivetrain damage or unexpected vehicle movement which could result in serious vehicle damage or personal injury.**

⚠ CAUTION

- **Do not operate the engine on a free roller when any of the wheels are raised.**
- **The powertrain may be damaged if you continue driving with the "4WD Error" warning on.**
- **If the warning message remains on after the above operation, have your vehicle checked as soon as possible. It is recommended that you visit a NISSAN dealer for this service.**
- **If the "4WD Error" warning appears while driving, there may be a malfunction in the 4WD system.**

Reduce the vehicle speed and have your vehicle checked as soon as possible. It is recommended that you visit a NISSAN dealer for this service.

When the vehicle is in the P (Park) position, the operation noise may be heard from the lower part of the vehicle. This is not a malfunction.

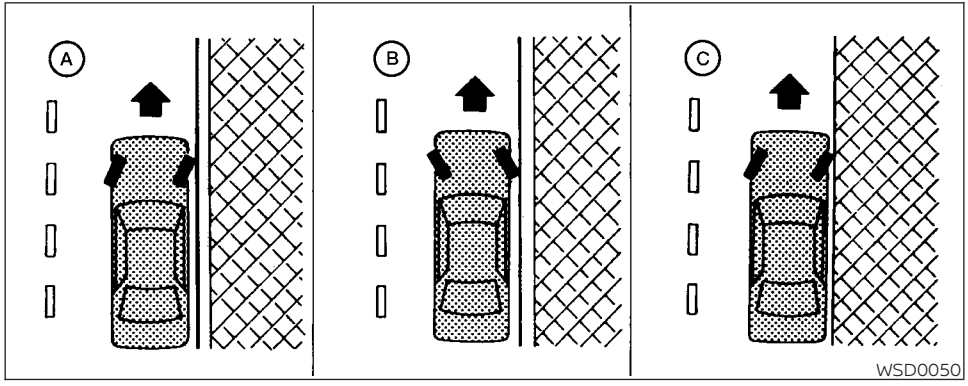

⚠WARNING

- **Do not stop or park the vehicle over flammable materials such as dry grass, waste paper or rags. They may ignite and cause a fire.**
- **Safe parking procedures require that both the parking brake be set and the transmission placed into P (Park). Failure to do so could cause the vehicle to move unexpectedly or roll away and result in an accident. Make sure the shift lever has been pushed as far forward as it can go and cannot be moved without depressing the foot brake pedal.**
- **Never leave the engine running while the vehicle is unattended.**
- **Do not leave children unattended inside the vehicle. They could unknowingly activate switches or controls or make the vehicle move. Unattended children could become involved in serious accidents.**
- **To help avoid risk of injury or death through unintended operation of the vehicle and/or its systems, do not leave children, people who require the assistance of others or pets unattended in your vehicle. Additionally, the temperature inside a closed vehicle on a warm day can quickly become high enough to cause a significant risk of injury or death to people and pets.**

1. Firmly apply the parking brake.
2. Press the park button to shift to the P (Park) position.
3. To help prevent the vehicle from rolling into traffic when parked on an incline, it is a good practice to turn the wheels as illustrated.
   - **HEADED DOWNHILL WITH CURB Ⓐ:**
     Turn the wheels into the curb and move the vehicle forward until the curb side wheel gently touches the curb.
   - **HEADED UPHILL WITH CURB Ⓑ:**
     Turn the wheels away from the curb and move the vehicle back until the curb side wheel gently touches the curb.
   - **HEADED UPHILL OR DOWNHILL, NO CURB Ⓒ:**
     Turn the wheels toward the side of the road so the vehicle will move away from the center of the road if it moves.
4. Place the ignition switch in the LOCK position.

TOWING LOAD/SPECIFICATION CHART														
	ASR		MEX/LAC 2WD (Type A)		MEX/LAC 2WD (Type B)		MEX 4WD		LAC 4WD (Type A)		LAC 4WD (Type B)		For GCC Only	
	kg	lbs.	kg	lbs.	kg	lbs.	kg	lbs.	kg	lbs.	kg	lbs.	kg	lbs.
Maximum Towing Capacity*1	2,700	5,952	1,588	3,500	2,722	6,000	2,722	6,000	1,588	3,500	2,722	6,000	1,500	3,307
Maximum Tongue Load	270	595	158	350	272	600	272	600	158	350	272	600	150	330
Maximum Gross Combined Weight Rating	5,035	11,102	4,000	8,818	5,035	11,102	5,035	11,102	4,000	8,818	5,035	11,102	4,000	8,818
*1: The towing capacity values are calculated assuming a base vehicle with driver and any options required to achieve the rating. Additional passengers, cargo and/or optional equipment will add weight to the vehicle and reduce your vehicle's maximum towing capacity.														

⚠ WARNING

Overloading or improper loading of a trailer and its cargo can adversely affect vehicle handling, braking and performance and may lead to accidents.

⚠ CAUTION

- **Do not tow a trailer or haul a heavy load for the first 800 km (500 miles). Your engine, axle or other parts could be damaged.**
- **For the first 800 km (500 miles) that you tow a trailer, do not drive over 80 km/h (50 mph) and do not make starts at full throttle. This helps the engine and other parts of your vehicle wear in at the heavier loads.**

Your new vehicle was designed to be used primarily to carry passengers and cargo. Remember that towing a trailer places additional loads on your vehicle's engine, drive train, steering, braking, and other systems.

TRAILER TOWING TIPS

When launching a boat, don't allow the water level to go over the exhaust tail pipe or rear bumper.

⚠ WARNING

- **Do not modify the vehicle exhaust system, brake system, etc. to install a trailer hitch.**

FLAT TOWING FOR 4–WHEEL DRIVE VEHICLE (if so equipped)

Towing your vehicle with all four wheels on the ground is sometimes called flat towing. This method is sometimes used when towing a vehicle behind a recreational vehicle, such as a motor home.

⚠ CAUTION

- **Failure to follow these guidelines can result in severe transmission damage.**
- **Never flat tow your 4–Wheel Drive (4WD) vehicle.**
- **DO NOT tow your 4–Wheel Drive (4WD) vehicle with any wheels on the ground. Doing so may cause serious and expensive damage to the powertrain.**
- **For emergency towing procedures, see "Towing recommended by NISSAN" (P. 6-19).**

FLAT TOWING FOR FRONT WHEEL DRIVE VEHICLE (if so equipped)

Towing your vehicle with all four wheels on the ground is sometimes called flat towing. This method is sometimes used when towing a vehicle behind a recreational vehicle, such as a motor home.

⚠ CAUTION

- **Failure to follow these guidelines can result in severe transmission damage.**
- **Whenever flat towing your vehicle, always tow forward, never backward.**
- **Never tow your front wheel drive vehicle with the front tires on the ground. Doing so may cause serious and expensive damage to the powertrain.**
- **DO NOT tow your front wheel drive automatic transmission vehicle with all four wheels on the ground (flat towing). Doing so WILL DAMAGE internal transmission parts due to lack of transmission lubrication.**
- **For emergency towing procedures, see "Towing recommended by NISSAN" (P. 6-19).**

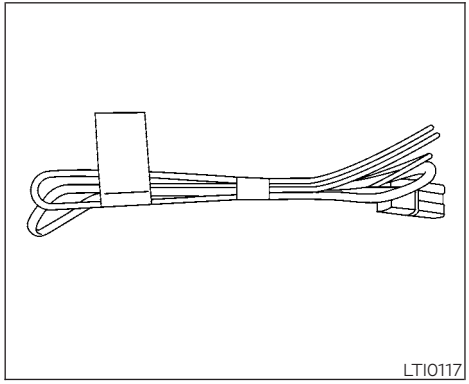

Jumper Harness

ELECTRIC TRAILER BRAKE CONTROLLER (if so equipped)

Trailers equipped with electric brakes may require the installation of an aftermarket trailer brake controller.

Your vehicle may be equipped with a connector and jumper harness that is specifically designed to be used when installing an aftermarket brake controller.

To install the electric trailer brake controller jumper harness, perform the following procedure:

1. Open the driver door. Move the seat to the rearmost position.

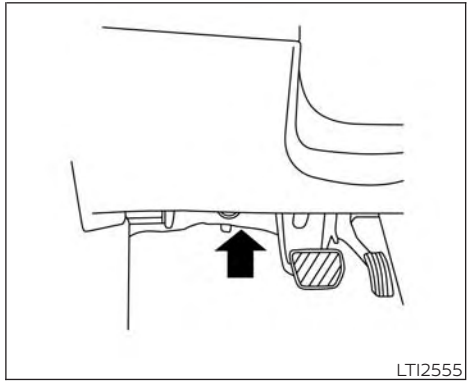

Connector Location

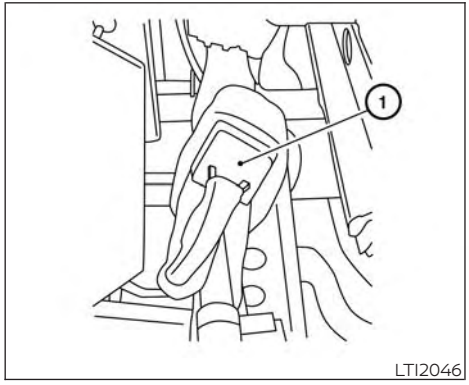

Connector

2. Locate the jumper harness connector under the lower portion of the instrument panel. The connector is taped to the wiring harness ① as indicated.

- The connector is marked with a white tag with "elec brake conn".

If you have trouble locating the wiring harness, it is recommended that you visit a NISSAN dealer for assistance.

Wire color designation for electric trailer brake controller jumper harness.

WIRE COLOR	NOTE
LAVENDER/WHITE	Vehicle stop lamp switch to trailer brake controller.
BLACK	Brake controller ground (-).
WHITE	Trailer brake controller switched output.
LAVENDER/GREEN	Fused trailer brake controller battery feed (B+).

3. Peel off the tape and connect the jumper harness to the connector.
4. Release the parking brake.
5. Install the aftermarket electric trailer brake controller according to the manufacturer's instructions.

⚠WARNING

- **If the engine is not running or is turned off while driving, the power assist for the steering will not work. Steering will be harder to operate.**
- **When the electric power steering warning light illuminates with the engine running, there will be no power assist for the steering. You will still have control of the vehicle, but the steering will be harder to operate. Have the power steering system checked. It is recommended that you visit a NISSAN dealer for this service.**

The power steering system is designed to provide power assist while driving to operate the steering wheel with light force.

When the steering wheel is operated repeatedly or continuously while parking or driving at a very low speed, the power assist for the steering wheel will be reduced. This is to prevent overheating of the power steering system and protect it from getting damaged. While the power assist is reduced, steering wheel operation will become heavy. When the temperature of the power steering system goes down, the power assist level will return to normal.

Avoid repeating such steering wheel operations that could cause the power steering system to overheat.

You may hear a sound when the steering wheel is operated quickly. However, this is not a malfunction.

If the electric power steering warning light illuminates while the engine is running, it may indicate the power steering system is not functioning properly and may need servicing. Have the power steering system checked. It is recommended that you visit a NISSAN dealer for this service.

When the electric power steering warning light illuminates with the engine running, there will be no power assist for the steering, but you will still have control of the vehicle. At this time, greater steering effort is required to operate the steering wheel, especially in sharp turns and at low speeds.

For additional information, see "Electric power steering warning light" (P. 2-17).

The brake system has two separate hydraulic circuits. If one circuit malfunctions, you will still have braking at two wheels.

BRAKE PRECAUTIONS

Vacuum assisted brakes

The brake booster aids braking by using engine vacuum. If the engine stops, you can stop the vehicle by depressing the brake pedal. However, greater foot pressure on the brake pedal will be required to stop the vehicle and stopping distance will be longer.

Using the brakes

Avoid resting your foot on the brake pedal while driving. This will overheat the brakes, wear out the brake pads faster, and reduce gas mileage.

To help reduce brake wear and to prevent the brakes from overheating, reduce speed and downshift to a lower gear before going down a slope or long grade. Overheated brakes may reduce braking performance and could result in loss of vehicle control.

⚠WARNING

- **While driving on a slippery surface, be careful when braking, accelerating or downshifting. Abrupt braking or accelerating could cause the wheels to skid and result in an accident.**
- **If the engine is not running or is turned off while driving, the power assist for the brakes will not work. Braking will be harder.**

Wet brakes

When the vehicle is washed or driven through water, the brakes may get wet. As a result, your braking distance will be longer and the vehicle may pull to one side during braking.

To dry the brakes, drive the vehicle at a safe speed while lightly pressing the brake pedal to heat up the brakes. Do this until the brakes return to normal. Avoid driving the vehicle at high speeds until the brakes function correctly.

Parking brake break-in

Break in the parking brake shoes whenever the stopping effect of the parking brake is weakened or whenever the parking brake shoes and/or rotors are replaced, in order to assure the best brake performance.

This procedure is described in the vehicle service manual and can be performed by a NISSAN dealer.

ANTI-LOCK BRAKING SYSTEM (ABS)

⚠ WARNING

- **The ABS is a sophisticated device, but it cannot prevent accidents resulting from careless or dangerous driving techniques. It can help maintain vehicle control during braking on slippery surfaces. Remember that stopping distances on slippery surfaces will be longer than on normal surfaces even with ABS. Stopping distances may also be longer on rough, gravel or snow covered roads, or if you are using tire chains. Always maintain a safe distance from the vehicle in front of you. Ultimately, the driver is responsible for safety.**
- **Tire type and condition may also affect braking effectiveness.**
  - **When replacing tires, install the specified size of tires on all four wheels.**
  - **When installing a spare tire, make sure that it is the proper size and type as specified on the tire placard. For additional information, see "Tire placard" (P. 8-36).**
  - **For additional information, see "Wheels and tires" (P. 8-35).**

The ABS controls the brakes so the wheels do not lock during hard braking or when braking on slippery surfaces. The system detects the rotation speed at each wheel and varies the brake fluid pressure to prevent each wheel from locking and sliding. By preventing each wheel from locking, the system helps the driver maintain steering control and helps to minimize swerving and spinning on slippery surfaces.

Using the system

Depress the brake pedal and hold it down. Depress the brake pedal with firm steady pressure, but do not pump the brakes. The Anti-lock Braking System will operate to prevent the wheels from locking up. Steer the vehicle to avoid obstacles.

⚠ WARNING

Do not pump the brake pedal. Doing so may result in increased stopping distances.

Self-test feature

The Anti-lock Braking System (ABS) includes electronic sensors, electric pumps, hydraulic solenoids and a computer. The computer has a built-in diagnostic feature that tests the system each time you start the engine and move the vehicle at a low speed in forward or reverse. When the self-test occurs, you may hear a "clunk" noise and/or feel a pulsation in the brake pedal. This is normal and does not indicate a malfunction. If the computer senses a malfunction, it switches the ABS off and illuminates the ABS warning light on the

instrument panel. The brake system then operates normally, but without anti-lock assistance.

If the ABS warning light illuminates during the self-test or while driving, have the vehicle checked. It is recommended that you visit a NISSAN dealer for this service.

Normal operation

The Anti-lock Braking System (ABS) operates at speeds above 5 - 10 km/h (3 - 6 mph). The speed varies according to road conditions.

When the ABS senses that one or more wheels are close to locking up, the actuator rapidly applies and releases hydraulic pressure. This action is similar to pumping the brakes very quickly. You may feel a pulsation in the brake pedal and hear a noise from under the hood or feel a vibration from the actuator when it is operating. This is normal and indicates that the ABS is operating properly. However, the pulsation may indicate that road conditions are hazardous and extra care is required while driving.

BRAKE ASSIST

When the force applied to the brake pedal exceeds a certain level, the Brake Assist is activated generating greater braking force than a conventional brake booster even with light pedal force.

⚠WARNING

The Brake Assist is only an aid to assist braking operation and is not a collision warning or avoidance device. It is the driver's responsibility to stay alert, drive safely and be in control of the vehicle at all times.

VEHICLE DYNAMIC CONTROL (VDC) OR ELECTRONIC STABILITY PROGRAM (ESP) SYSTEM

The VDC or ESP system uses various sensors to monitor driver inputs and vehicle motion. Under certain driving conditions, the VDC or ESP system helps to perform the following functions:

- Controls brake pressure to reduce wheel slip on one slipping drive wheel so power is transferred to a non-slipping drive wheel on the same axle.
- Controls brake pressure and engine output to reduce drive wheel slip based on vehicle speed (traction control function).
- Controls brake pressure at individual wheels and engine output to help the driver maintain control of the vehicle in the following conditions:
  - Understeer (vehicle tends to not follow the steered path despite increased steering input)
  - Oversteer (vehicle tends to spin due to certain road or driving conditions)

The VDC or ESP system can help the driver to maintain control of the vehicle, but it cannot prevent loss of vehicle control in all driving situations.

When the VDC or ESP system operates, the indicator light in the instrument panel flashes so note the following:

- The road may be slippery or the system may determine some action is required to help keep the vehicle on the steered path.
- You may feel a pulsation in the brake pedal and hear a noise or vibration from under the hood. This is normal and indicates that the VDC or ESP system is working properly.
- Adjust your speed and driving to the road conditions.

For additional information, see "Slip indicator light" (P. 2-21) and "Vehicle Dynamic Control (VDC) or Electronic Stability Program (ESP) OFF indicator light" (P. 2-22).

If a malfunction occurs in the system, the and indicator lights come on in the instrument panel. The VDC or ESP system automatically turns off when these indicator lights are on.

The vehicle information display is used to turn off the VDC or ESP system. The indicator light and the Intelligent Emergency Braking with Pedestrian Detection system warning light illuminate to indicate the VDC or ESP and Intelligent Emergency Braking with Pedestrian Detection systems are off.

When the vehicle information display is used to turn off the system, the VDC or ESP system still operates to prevent one drive wheel from slipping by transferring power to a non-slipping drive wheel. The indicator light flashes if this occurs. All other VDC or ESP functions are off and the indicator light will not flash.

The VDC or ESP system is automatically reset to on when the ignition switch is placed in the OFF position then back to the ON position.

The computer has a built-in diagnostic feature that tests the system each time you start the engine and move the vehicle forward or in reverse at a slow speed. When the self-test occurs, you may hear a clunk noise and/or feel a pulsation in the brake pedal. This is normal and is not an indication of a malfunction.

⚠WARNING

- **The VDC or ESP system is designed to help the driver maintain stability but does not prevent accidents due to abrupt steering operation at high speeds or by careless or dangerous driving techniques. Reduce vehicle speed and be especially careful when driving and cornering on slippery surfaces and always drive carefully.**
- **Do not modify the vehicle's suspension. If suspension parts such as shock absorbers, struts, springs, stabilizer bars, bushings and wheels are not NISSAN recommended for your vehicle or are extremely deteriorated, the VDC or ESP system may not operate properly. This could adversely affect vehicle handling performance, and the indicator light may flash or both the and indicator lights may illuminate.**
- **If brake related parts such as brake pads, rotors and calipers are not NISSAN recommended or are extremely deteriorated, the VDC or ESP system may not operate properly and both the and the indicator lights may illuminate.**

- **If engine control related parts are not NISSAN recommended or are extremely deteriorated, both the and indicator lights may illuminate.**
- **When driving on extremely inclined surfaces such as higher banked corners, the VDC or ESP system may not operate properly and the indicator light may flash or both the and indicator lights may illuminate. Do not drive on these types of roads.**
- **When driving on an unstable surface such as a turntable, ferry, elevator or ramp, the indicator light may flash or both the and indicator lights may illuminate. This is not a malfunction. Restart the engine after driving onto a stable surface.**
- **If wheels or tires other than the NISSAN recommended ones are used, the VDC or ESP system may not operate properly and the indicator light may flash or both the and indicator lights may illuminate.**
- **The VDC or ESP system is not a substitute for winter tires or tire chains on a snow covered road.**

RISE-UP AND BUILD-UP

The system gradually adjusts braking power during normal braking to help provide an enhanced brake feel.

BRAKE FORCE DISTRIBUTION

During braking while driving through turns, the system optimizes the distribution of force to each of the four wheels depending on the radius of the turn.

⚠WARNING

- **The VDC or ESP system is designed to help the driver maintain stability but does not prevent accidents due to abrupt steering operation at high speeds or by careless or dangerous driving techniques. Reduce vehicle speed and be especially careful when driving and cornering on slippery surfaces and always drive carefully.**
- **Do not modify the vehicle's suspension. If suspension parts such as shock absorbers, struts, springs, stabilizer bars, bushings and wheels are not NISSAN recommended for your vehicle or are extremely deteriorated, the VDC or ESP system may not operate properly. This could adversely affect vehicle handling performance, and the indicator light may flash or both the and indicator lights may illuminate.**
- **If brake related parts such as brake pads, rotors and calipers are not NISSAN recommended or are extremely deteriorated, the VDC or ESP system may not operate properly and both the and the indicator lights may illuminate.**
- **If engine control related parts are not NISSAN recommended or are extremely deteriorated, both the and indicator lights may illuminate.**

- **When driving on extremely inclined surfaces such as higher banked corners, the VDC or ESP system may not operate properly and the indicator light may flash or both the and indicator lights may illuminate. Do not drive on these types of roads.**
- **When driving on an unstable surface such as a turntable, ferry, elevator or ramp, the indicator light may flash or both the and indicator lights may illuminate. This is not a malfunction. Restart the engine after driving onto a stable surface.**
- **If wheels or tires other than the NISSAN recommended ones are used, the VDC or ESP system may not operate properly and the indicator light may flash or both the and indicator lights may illuminate.**
- **The VDC or ESP system is not a substitute for winter tires or tire chains on a snow covered road.**

The chassis control is an electric control module that includes the following functions:

- Intelligent Trace Control
- Intelligent Ride Control (if so equipped)

INTELLIGENT TRACE CONTROL

This system senses driving based on the driver's steering and acceleration/braking patterns, and controls brake pressure at individual wheels to aid tracing at corners and help smooth vehicle response.

When the VDC or ESP system is turned off, the Intelligent Trace Control is also turned off.

Amount of brake control is changed depending on the mode selected by the Drive Mode Selector.

When the Intelligent Trace Control is not functioning properly, the master warning light illuminates, and warning message "Chassis Control System Error" or "Chassis Control System Fault" will also appear in the vehicle information display.

If the chassis control warning message appears in the vehicle information display, it may indicate that the Intelligent Trace Control is not functioning properly. Have the system checked as soon as possible. It is recommended that you visit a NISSAN dealer for this service. For additional information, see "Vehicle information display warnings and indicators" (P. 2-40) or (P. 2-66).

⚠WARNING

The Intelligent Trace Control may not be effective depending on the driving condition. Always drive carefully and attentively.

When the Intelligent Trace Control is operating, you may feel a pulsation in the brake pedal and hear a noise. This is normal and indicates that the Intelligent Trace Control is operating properly. You may also feel deceleration when the Intelligent Trace Control is operating. However, this is not a malfunction.

INTELLIGENT RIDE CONTROL (if so equipped)

This system senses upper body motion and controls four wheel brake pressure. This will enhance ride comfort in an effort to restrain uncomfortable upper body movement when passing over undulated

road surfaces. When the VDC or ESP system is turned off, the Intelligent Ride Control is also turned off.

If the chassis control warning message appears in the vehicle information display, it may indicate that the Intelligent Ride Control is not functioning properly. Have the system checked as soon as possible. It is recommended that you visit a NISSAN dealer for this service.

⚠WARNING

The Intelligent Ride Control may not be effective depending on the driving condition. Always drive carefully and attentively.

When the Intelligent Ride Control is operating, you may feel a pulsation in the brake pedal and hear a noise. This is normal and indicates that the Intelligent Ride Control is operating properly. You may also feel deceleration when the Intelligent Ride Control is operating. However, this is not a malfunction.

⚠WARNING

- **Never rely solely on the hill descent control system to control vehicle speed when driving on steep downhill grades. Always drive carefully and attentively when using the hill descent control system and decelerate the vehicle speed by depressing the brake pedal if necessary. Be especially careful when driving on frozen, muddy or extremely steep downhill roads. Failure to control vehicle speed may result in a loss of control of the vehicle and possible serious injury or death.**
- **The hill descent control may not control the vehicle speed on a hill under all load or road conditions. Always be prepared to depress the brake pedal to control vehicle speed. Failure to do so may result in a collision or serious personal injury.**

The hill descent control system helps maintain vehicle speed when driving under 25 km/h (15 mph) on steeper downhill grades. Hill descent control is useful when engine braking alone cannot control vehicle speed. Hill descent control applies the vehicle brakes to control vehicle speed allowing the driver to concentrate on steering while reducing the burden of brake and accelerator operation.

If the hill descent control system ON indicator light is blinking, the hill descent control is engaged; however, the hill descent control will not control the vehicle speed.

- Once the system is activated, the indicator light will remain on in the instrument panel. For additional information, see "Hill descent control system ON indicator light" (P. 2-18).

If the accelerator or brake pedal is depressed while the hill descent control system is on, the system will stop operating temporarily. As soon as the accelerator or brake pedal is released, the hill descent control system begins to function again if the hill descent control operating conditions are fulfilled.

HILL START ASSIST SYSTEM

⚠ WARNING

- **Never rely solely on the hill start assist system to prevent the vehicle from moving backward on a hill. Always drive carefully and attentively. Depress the brake pedal when the vehicle is stopped on a steep hill. Be especially careful when stopped on a hill on frozen or muddy roads. Failure to prevent the vehicle from rolling backwards may result in a loss of control of the vehicle and possible serious injury or death.**
- **The hill start assist system is not designed to hold the vehicle at a standstill on a hill. Depress the brake pedal when the vehicle is stopped on a steep hill. Failure to do so may cause the vehicle to roll backwards and may result in a collision or serious personal injury.**
- **The hill start assist may not prevent the vehicle from rolling backwards on a hill under all load or road conditions. Always be prepared to depress the brake pedal to prevent the vehicle from rolling backwards. Failure to do so may result in a collision or serious personal injury.**

The hill start assist system automatically keeps the brakes applied to help prevent the vehicle from rolling backward in the time it takes the driver to release the brake pedal and apply the accelerator when the vehicle is stopped on a hill.

Hill start assist will operate automatically under the following conditions:

- The shift lever is moved to a forward or reverse gear.
- The vehicle is stopped completely on a hill by applying the brake.

The maximum holding time is 2 seconds. After 2 seconds the vehicle will begin to roll back and hill start assist will stop operating completely.

Hill start assist will not operate when the shift position is moved to N (Neutral) or P (Park), or on a flat and level road.

FRONT AND REAR SONAR SYSTEM (if so equipped)

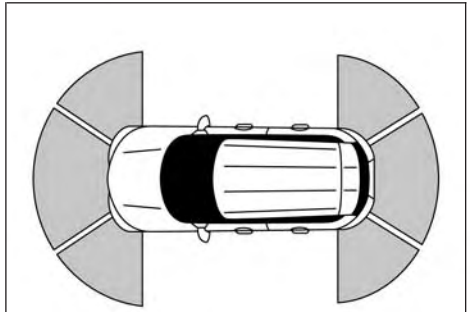
LSD4335

The sonar system sounds a tone to inform the driver of obstacles around the vehicle using the sonar sensors located in the front and rear bumpers..

When the sonar system is turned on, the sonar view will automatically appear in the vehicle information display.

⚠ WARNING

- **The sonar system is a convenience but it is not a substitute for proper parking.**

- **The driver is always responsible for safety during parking and other maneuvers. Always look around and check that it is safe to do so before parking.**
- **Read and understand the limitations of the sonar system as contained in this section. The colors of the corner sonar indicator indicates different distances to the object.**
- **Inclement weather or ultrasonic sources such as an automatic car wash, a truck's compressed-air brakes or a pneumatic drill may affect the function of the system; this may include reduced performance or a false activation.**
- **The sonar system is designed as an aid to the driver in detecting large stationary objects to help avoid damaging the vehicle.**
- **The sonar system is not designed to prevent contact with small or moving objects. Always move slowly. The system will not detect small objects below the bumper, and may not detect objects close to the bumper or on the ground.**
- **The sonar system may not detect the following objects: fluffy objects such as snow, cloth, cotton, glass, wool, etc.; thin objects such as rope, wire and chain, etc.; or wedge-shaped objects.**

If your vehicle sustains damage to the bumper fascia, leaving it misaligned or bent, the sensing zone may be altered causing inaccurate measurement of obstacles or false alarms.

⚠ CAUTION

- **Excessive noise (such as audio system volume or an open vehicle window) will interfere with the tone and it may not be heard.**
- **Keep the sonar sensors (located on the bumper fascias) free from snow, ice and large accumulations of dirt. Do not clean the sensors with sharp objects. If the sensors are covered, the accuracy of the sonar function will be diminished.**

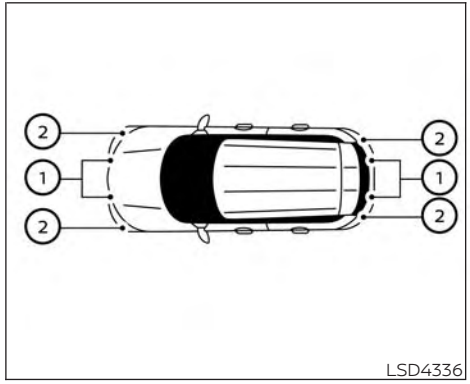

SYSTEM OPERATION

① Center sonar sensors

② Corner sonar sensors

The system informs with a visual and audible alert of:

- front obstacles when the shift lever is in the D (Drive) position
- front and rear obstacles when the shift lever is in the R (Reverse) position

How the system alerts of obstacles:

The system is deactivated at speeds above 10 km/h (6 mph). It is reactivated at lower speeds.

The intermittent tone will stop after several seconds when the obstacle is identified only with the center sensor. The tone will stop when the obstacle gets away from the vehicle.

When the object is detected, the indicator (green) appears and blinks and the tone sounds intermittently. When the vehicle moves closer to the object, the color of the indicator turns yellow and the rate of the blinking increases. When the vehicle is very close to the object, the indicator stops blinking and turns red, and the tone sounds continuously.

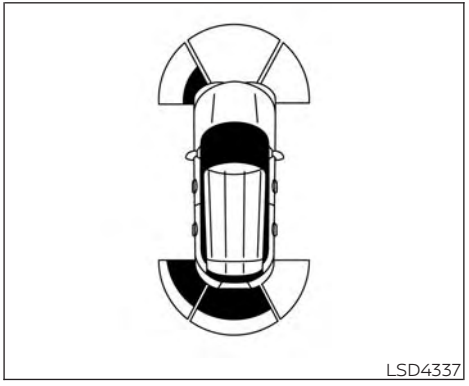
LSD4337

When the vehicle moves closer to an obstacle, the sonar indicator (detected area) appears in the vehicle information display.

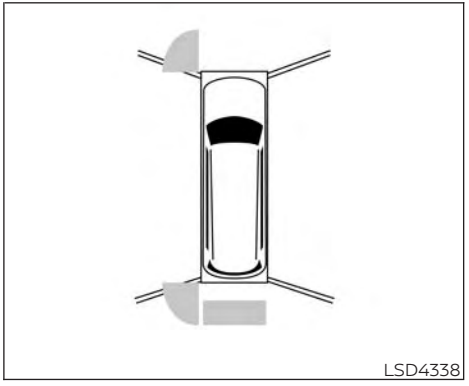
LSD4338

The sonar indicator also appears on the camera view of the center display.

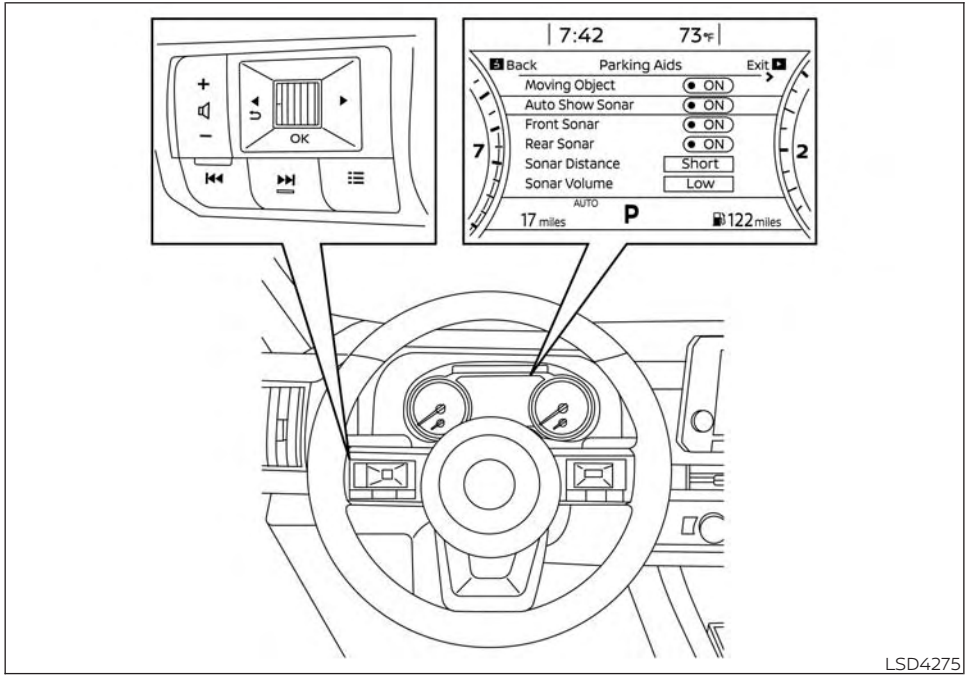

For vehicles with the 7 inch (18 cm) display

HOW TO ENABLE/DISABLE THE FRONT AND REAR SONAR SYSTEM

The system is automatically activated when the push button ignition is placed in the ON position and the shift lever is in the R (Reverse) position.

Perform the following steps to enable or disable the sonar system:

1. Press the ◀▶ button until "Settings" appears in the vehicle information display and then press OK. Use the scroll dial to select "Driver Assistance." Then press the OK button.
2. Select "Parking Aids" and press the OK button.
   - Select "Auto Show Sonar" or "Display" and press the OK button to turn on or off the option to automatically display the sonar when activated.
   - Select "Front Sonar" or "Front" (if so equipped) and press the OK button to turn the front sonar sensors only on or off.
   - Select "Rear Sonar" or "Rear" and press the OK button to turn the rear sonar sensors only on or off.
   - Select "Sonar Distance" or "Distance" to change the sonar system volume to "Long," Medium" or "Short."

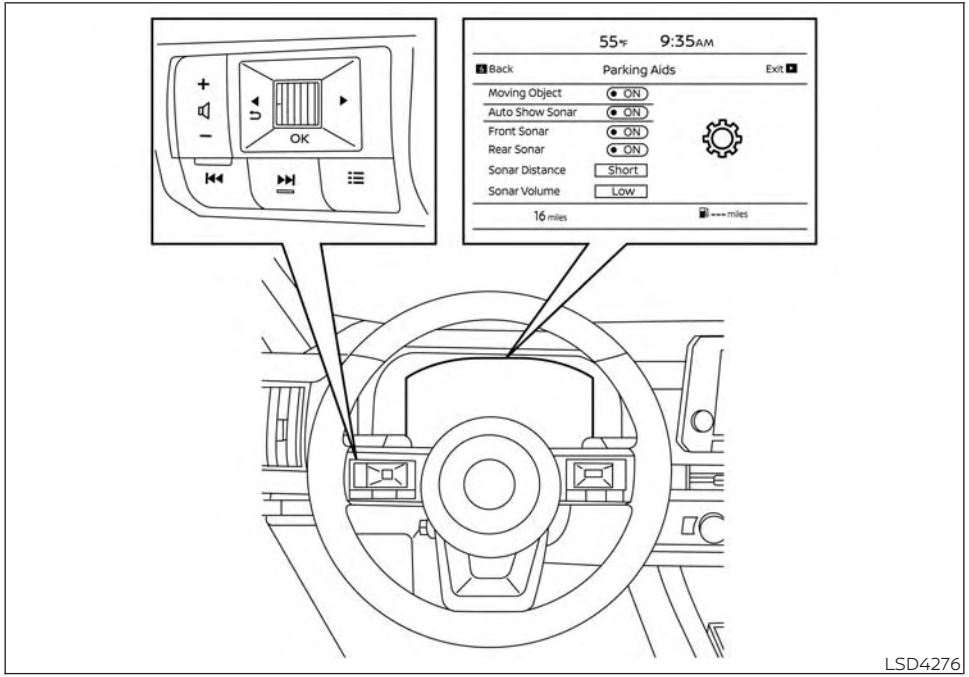

For vehicles with the 12.3 inch (31.2 cm) display

- Select "Sonar Volume" or "Volume" to change the sonar system distance to "High," "Medium" or "Low."

NOTE:

The system will automatically be turned on when the engine is restarted.

SONAR LIMITATIONS

⚠ WARNING

Listed below are the system limitations for the sonar system. Failure to operate the vehicle in accordance with these system limitations could result in serious injury or death.

- **Read and understand the limitations of the sonar system as contained in this section. Inclement weather may affect the function of the sonar system; this may include reduced performance or a false activation.**
- **The sonar system is deactivated at speeds above 10 km/h (6 mph). It is reactivated at lower speeds.**
- **Inclement weather or ultrasonic sources such as an automatic car wash, a truck's compressed-air brakes or a pneumatic drill may affect the function of the system; this may include reduced performance or a false activation.**
- **The system is not designed to prevent contact with small or moving objects. Always move slowly. The system will not detect small objects below the bumper or on the ground.**
- **The system may not detect the following objects: fluffy objects such as snow, cloth, cotton, glass-wool, etc.; thin objects such as rope, wire and chain, etc.; or wedge-shaped objects; complex-shaped objects or multiple objects in close.**
- **The sonar system may not detect objects at speeds above 5 km/h (3 mph) and may not detect certain angular or moving objects.**
- **The sonar system may not operate in the following conditions:**
  - **When rain, snow, ice, dirt, etc. adheres to the sonar.**
  - **When a loud sound is heard in the area around the vehicle.**
  - **When the surface of the obstacle is diagonal to the front or rear of the vehicle.**
  - **When a sonar or the area around the sensor is extremely hot or cold.**
- **The sonar system may unintentionally operate in the following conditions:**
  - **When there is overgrown grass in the area around the vehicle.**
  - **When there are bumps, protrusions or manhole covers on the road surface.**
  - **When the vehicle drives through a draped flag or a curtain.**
  - **When there is an accumulation of snow or ice behind the vehicle.**
  - **When driving on a steep hill.**

SYSTEM TEMPORARILY UNAVAILABLE

When sonar blockage is detected, the system will be deactivated automatically.

The system is not available until the conditions no longer exist.

The sonar sensors may be blocked by temporary ambient conditions such as splashing water, mist or fog. The blocked condition may also be caused by objects such as ice, frost or dirt obstructing the sonar sensors.

Action to take:

When the above conditions no longer exist, the system will resume automatically.

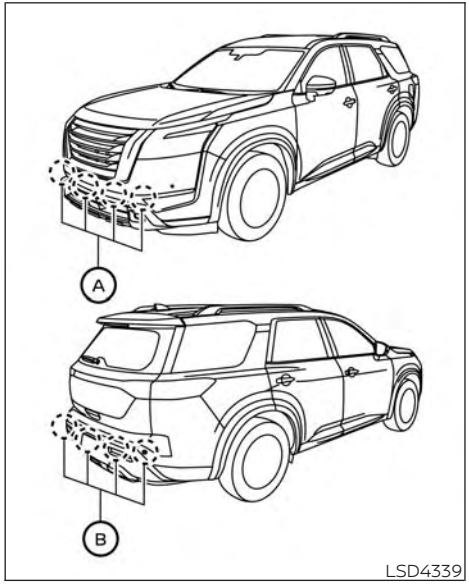

SYSTEM MAINTENANCE

The sonar sensors Ⓐ and Ⓑ are located on the front and rear bumpers.

- Always keep the area near the sonar sensors clean.
- If the sonar sensors are dirty, wipe them off with a soft cloth while being careful to not damage them.
- The sonar sensors may be blocked by temporary ambient conditions such as splashing water, mist or fog. The blocked condition may also be caused by objects such as ice, frost or dirt obstructing the sonar sensors. Check for and remove objects obstructing the area around the sonar sensors.
- Do not subject the area around the sonar sensors to strong impact. Also, do not remove or disassemble the sonar sensors. If the sonar sensors and peripheral areas are deformed in an accident, etc., have the sonar sensors checked by a NISSAN dealer.
- Do not attach stickers (including transparent material), install accessories or apply additional paint on the sonar sensors and their surrounding areas. This may cause a malfunction or improper operation.
- When washing the vehicle using a high-pressure washer, do not apply direct washer pressure on the sonar sensors. This may cause a malfunction of the sonar sensors.

FREEING A FROZEN DOOR LOCK

To prevent a door lock from freezing, apply de-icer through the key hole. If the lock becomes frozen, heat the key before inserting it into the key hole, or use the NISSAN Intelligent Key®.

ANTIFREEZE

In the winter when it is anticipated that the temperature will drop below 0°C (32°F), check the antifreeze to assure proper winter protection. For additional information, see "Engine cooling system" (P. 8-9).

BATTERY

If the battery is not fully charged during extremely cold weather conditions, the battery fluid may freeze and damage the battery. To maintain maximum efficiency, the battery should be checked regularly. For additional information, see "Battery" (P. 8-18).

DRAINING OF COOLANT WATER

If the vehicle is to be left outside without antifreeze, drain the cooling system, including the engine block. Refill before operating the vehicle. For additional information, see "Changing engine coolant" (P. 8-10).

TIRE EQUIPMENT

1. SUMMER tires have a tread designed to provide superior performance on dry pavement. However, the performance of these tires will be substantially reduced in snowy and icy conditions. If you operate your vehicle on snowy or icy roads, NISSAN recommends the use of MUD & SNOW or ALL SEASON TIRES on all four wheels. It is recommended that you visit a NISSAN dealer for the tire type, size, speed rating and availability information.
2. For additional traction on icy roads, studded tires may be used. However, some U.S. states and Canadian provinces prohibit their use. Check local, state and provincial laws before installing studded tires.

Skid and traction capabilities of studded snow tires on wet or dry surfaces may be poorer than that of non-studded snow tires.

3. Tire chains may be used. For additional information, see "Tire chains" (P. 8-39).

4-Wheel Drive (4WD) model

If you install snow tires, they must also be the same size, brand, construction and tread pattern on all four wheels.

SPECIAL WINTER EQUIPMENT

It is recommended that the following items be carried in the vehicle during winter:

- A scraper and stiff-bristled brush to remove ice and snow from the windows and wiper blades.
- A sturdy, flat board to be placed under the jack to give it firm support.
- A shovel to dig the vehicle out of snowdrifts.
- Extra washer fluid to refill the windshield-washer fluid reservoir.

DRIVING ON SNOW OR ICE

⚠WARNING

- **Wet ice (0°C, 32°F and freezing rain), very cold snow or ice can be slick and very hard to drive on. The vehicle will have much less traction or "grip" under these conditions. Try to avoid driving on wet ice until the road is salted or sanded.**
- **Whatever the condition, drive with caution. Accelerate and slow down with care. If accelerating or downshifting too fast, the drive wheels will lose even more traction.**
- **Allow more stopping distance under these conditions. Braking should be started sooner than on dry pavement.**
- **Allow greater following distances on slippery roads.**
- **Watch for slippery spots (glare ice). These may appear on an otherwise clear road in shaded areas. If a patch of ice is seen ahead, brake before reaching it. Try not to brake while on the ice, and avoid any sudden steering maneuvers.**
- **Do not use the cruise control on slippery roads.**
- **Snow can trap dangerous exhaust gases under your vehicle. Keep snow clear of the exhaust pipe and from around your vehicle.**

6 In case of emergency

Hazard warning flasher switch 6-2
Emergency engine shut off 6-2
Flat tire 6-3
Tire Pressure Monitoring System (TPMS) (if so equipped) 6-3
Changing a flat tire 6-4
Repairing a flat tire 6-11
Jump starting 6-16
Push starting 6-18
If your vehicle overheats 6-18
Towing your vehicle 6-19
Towing recommended by NISSAN 6-19
Vehicle recovery (freeing a stuck vehicle) 6-22

HAZARD WARNING FLASHER SWITCH

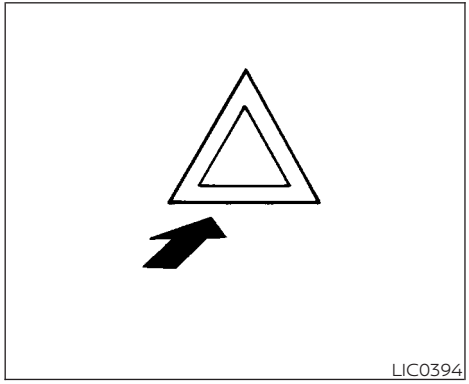
LIC0394

Push the switch on to warn other drivers when you must stop or park under emergency conditions. All turn signal lights flash.

⚠WARNING

- **If stopping for an emergency, be sure to move the vehicle well off the road.**
- **Do not use the hazard warning flashers while moving on the highway unless unusual circumstances force you to drive so slowly that your vehicle might become a hazard to other traffic.**
- **Turn signals do not work when the hazard warning flasher lights are on.**

The flashers will operate with the ignition switch placed in any position.

Some jurisdictions may prohibit the use of the hazard warning flasher switch while driving.

EMERGENCY ENGINE SHUT OFF

To shut off the engine in an emergency situation while driving, perform the following procedure:

– Rapidly push the push-button ignition switch three consecutive times in less than 1.5 seconds, or

– Push and hold the push-button ignition switch for more than 2 seconds.

TIRE PRESSURE MONITORING SYSTEM (TPMS) (if so equipped)

This vehicle is equipped with Tire Pressure Monitoring System (TPMS). It monitors tire pressure of all tires except the spare. When the low tire pressure warning light is lit, and the "Tyre Pressure Low - Add Air" warning appears in the vehicle information display, one or more of your tires is significantly under-inflated. If equipped, the system also displays pressure of all tires (except the spare tire) on the display screen by sending a signal from a sensor that is installed in each wheel. If the vehicle is being driven with low tire pressure, the TPMS will activate and warn you of it by the low tire pressure warning light. This system will activate only when the vehicle is driven at speeds above 25 km/h (16 mph). For additional information, see "Warning lights, indicator lights and audible reminders" (P. 2-12) and the "Tire Pressure Monitoring System (TPMS)" (P. 5-7).

⚠WARNING

- **Radio waves could adversely affect electric medical equipment. Those who use a pacemaker should contact the electric medical equipment manufacturer for the possible influences before use.**
- **If the low tire pressure warning light illuminates while driving, avoid sudden steering maneuvers or abrupt braking, reduce vehicle speed, pull off the road to a safe location and stop the vehicle as soon as possible. Driving with under-inflated tires may permanently damage the tires and increase the likelihood of tire failure. Serious vehicle damage could occur and may lead to an accident and could result in serious personal injury. Check the tire pressure for all four tires. Adjust the tire pressure to the recommended COLD tire pressure shown on the tire placard to turn the low tire pressure warning light OFF. If the light still illuminates while driving after adjusting the tire pressure, a tire may be flat or the TPMS may be malfunctioning. If you have a flat tire, replace it with a spare tire as soon as possible, If no tire is flat and all tires are properly inflated, have the vehicle checked. It is recommended that you visit a NISSAN dealer for this service.**
- **When using a wheel without TPMS such as the spare tire, the TPMS will not function and the low tire pressure warning light will flash for approximately 1 minute. The light will remain on after 1 minute. Have your tires replaced and/or TPMS system reset as soon as possible. It is recommended that you visit a NISSAN dealer for these services.**
- **Replacing tires with those not originally specified by NISSAN could affect the proper operation of the TPMS.**
- **Do not inject any tire liquid or aerosol tire sealant into the tires, as this may cause a malfunction of the tire pressure sensors.**

CHANGING A FLAT TIRE

If you have a flat tire, follow the instructions below:

Stopping the vehicle

1. Safely move the vehicle off the road and away from traffic.
2. Turn on the hazard warning flashers.
3. Park on a level surface and apply the parking brake. Push the park button to shift to the P (Park) position.
4. Turn off the engine.
5. Raise the hood to warn other traffic and to signal professional road assistance personnel that you need assistance.
6. Have all passengers get out of the vehicle and stand in a safe place, away from traffic and clear of the vehicle.

⚠WARNING

- **Make sure the parking brake is securely applied and the shift position is placed in the P (Park) position.**
- **Never change tires when the vehicle is on a slope, ice or slippery areas. This is hazardous.**
- **Never change tires if oncoming traffic is close to your vehicle. Wait for professional road assistance.**

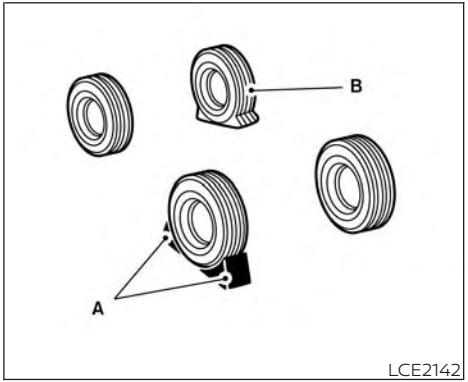

A. Blocks

B. Flat tire

Blocking wheels

Place suitable blocks at both the front and back of the wheel diagonally opposite the flat tire to prevent the vehicle from moving when it is jacked up.

⚠WARNING

Be sure to block the wheel as the vehicle may move and result in personal injury.

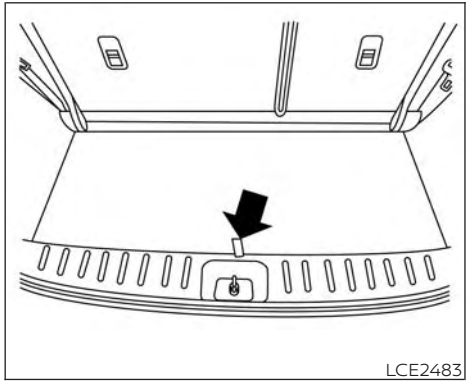

Getting the spare tire and tools

1. Open the liftgate and lift the luggage board in the cargo area using the strap.

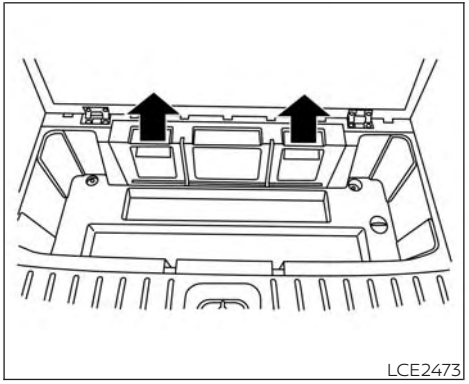

2. Remove the jack and tool kit cover by lifting up using the handles.

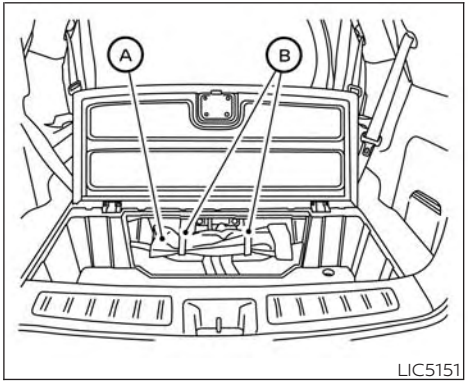

3. Remove the tool kit Ⓐ by releasing the Velcro straps Ⓑ.

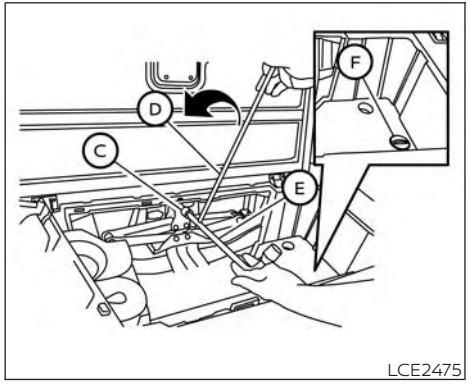

4. Remove the jack.
- The jack is secured by a fastener Ⓒ. To release the fastener, assemble the jacking rod Ⓓ into the wheel nut wrench Ⓔ and rotate counterclockwise to release.
- Insert the flat end of the wheel nut wrench Ⓔ into the slot of the fastener Ⓒ, and rotate counterclockwise to release the jack.

5. The lowering mechanism for the spare tire is located on the passenger side of the cargo area. Remove the cover Ⓕ to access the lowering mechanism.

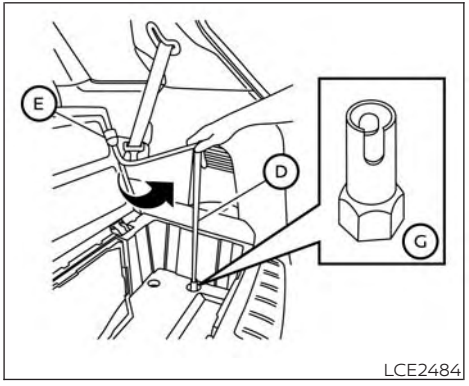

6. Attach the spare tire winch socket Ⓖ to the lowering mechanism nut.

7. To lower the spare tire, insert the wheel nut wrench Ⓔ into the jacking rod Ⓓ and insert the T-shaped end of the jacking rod into the winch socket Ⓖ and rotate counterclockwise.

8. Once the spare tire is lowered, release it from the vehicle by guiding the lowering cable and winch through the center of the tire.

NOTE:
Fully lower the spare tire below the vehicle before attempting to remove the winch from the spare tire.

9. After removing the spare tire from under the vehicle, be sure to crank the cable up by rotating the winch socket clockwise to stow it.

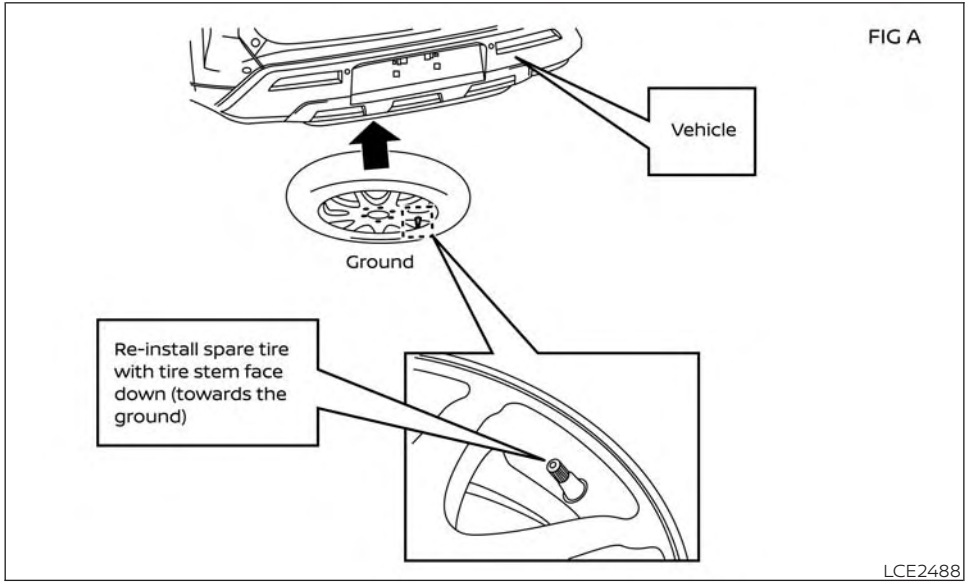

⚠CAUTION

- **Make sure safety cable is coiled above spare tire when reinstalling spare tire/wheel.**
- **When re-installing the spare tire under the vehicle after use, be sure to secure it with the tire stem facing down toward the ground. If the spare tire is improperly secured with the stem facing up towards the bottom of the vehicle, there is an increased risk of separating from the vehicle in the event of a crash which may pose a hazard in traffic or risk of injury to others.**

Jacking up vehicle and removing the damaged tire

⚠WARNING

- **DO NOT GET UNDER A VEHICLE THAT IS SUPPORTED BY A JACK.**
- **Never use a jack which is not provided with your vehicle.**
- **The jack, which is with your vehicle, is designed only to lift your vehicle during a tire change.**
- **Use the correct jack-up points. Never use any other part of the vehicle for jack support.**
- **If your vehicle is equipped with Running Boards use the Jack Point located on the front or rear mounting brackets.**
- **Never jack up the vehicle more than necessary.**

- **Never use blocks on or under the jack.**
- **Do not start or run the engine while vehicle is on the jack. It may cause the vehicle to move. This is especially true for vehicles with limited slip differentials.**
- **Never allow passengers to stay in the vehicle while the tire is off the ground.**
- **Never run the engine with a wheel(s) off the ground. It may cause the vehicle to move.**

Always refer to the illustration for the correct placement and jack-up points for your specific vehicle model and jack type.

Carefully read the caution label attached to the jack body and the following instructions.

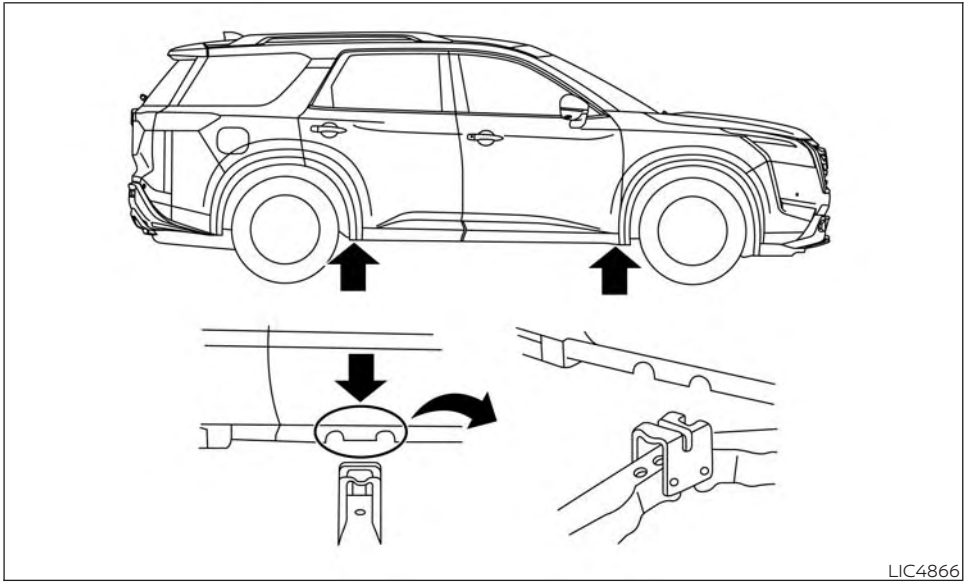

Vehicle shown without running boards

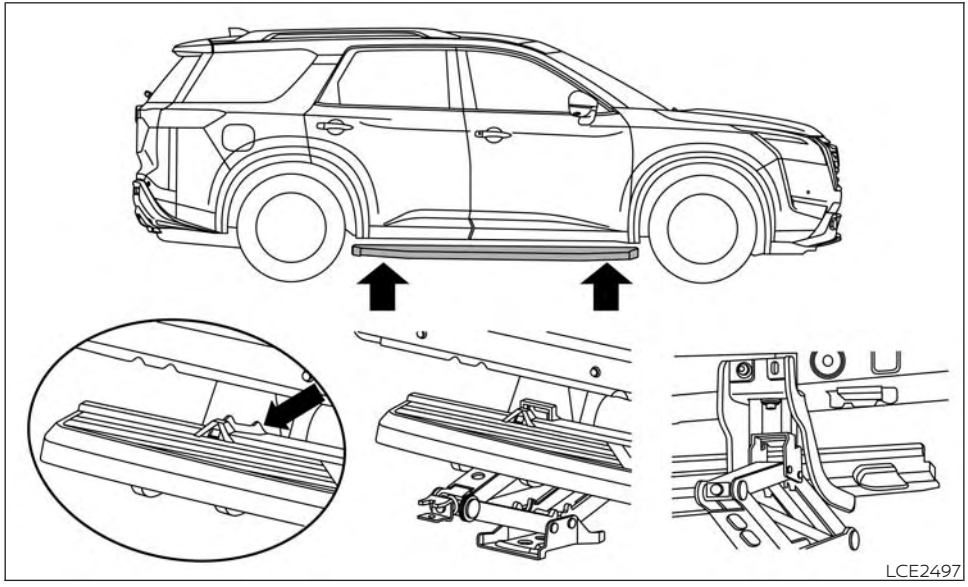

Vehicle shown with running boards

⚠WARNING

- **If your vehicle is equipped with Running Boards use the Jack Point located on the front or rear mounting brackets.**
- **The Jack Point is located directly behind the triangle shaped protrusion near the front and rear of the Running Board stepping surface.**

1. Loosen each wheel nut one or two turns by turning counterclockwise with the wheel nut wrench. **Do not remove the wheel nuts until the tire is off the ground.**
2. Place the jack directly under the jack-up point as illustrated so the top of the jack contacts the vehicle at the jack-up point. The jack-up points are indicated by the notches under the frame.

   If the vehicle is equipped with NISSAN Running Boards, the jack-up points are indicated on the running board stepping surface and the running board mounting brackets.

   The jack should be used on firm and level ground.

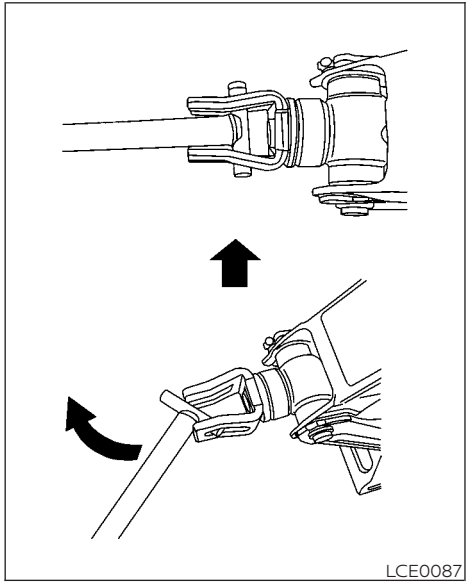
LCE0087

3. Install the assembled jack rod into the jack as shown.
4. To lift the vehicle, securely hold the jack lever and rod. Carefully raise the vehicle until the tire clears the ground.

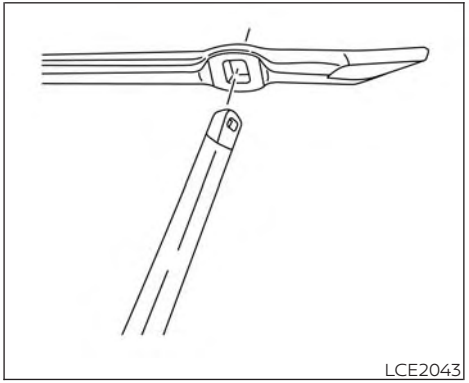
LCE2043

NOTE:

If the lug nut wrench/jack handle contacts the ground while raising the vehicle, disassemble the lug nut wrench from the jack extension rod, rotate it 90 degrees and reassemble.

5. Remove the wheel nuts and then remove the tire.

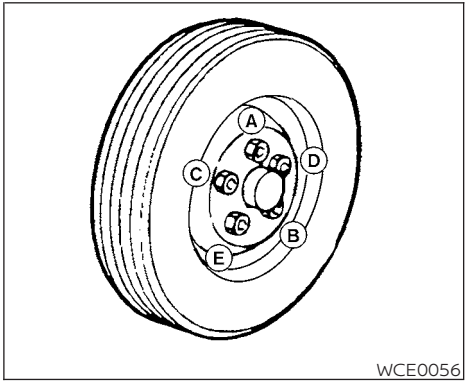

WCE0056

Installing the spare tire

The spare tire is designed for emergency use. For additional information, see "Wheels and tires" (P. 8-35).

1. Clean any mud or dirt from the surface between the wheel and hub.
2. Carefully put the spare tire on and tighten the wheel nuts finger tight.
3. With the wheel nut wrench, tighten wheel nuts alternately and evenly in the sequence illustrated (Ⓐ, Ⓑ, Ⓒ, Ⓓ, Ⓔ) until they are tight.

4. Lower the vehicle slowly until the tire touches the ground. Then, with the wheel nut wrench, tighten the wheel nuts securely in the sequence illustrated (Ⓐ, Ⓑ, Ⓒ, Ⓓ, Ⓔ). Lower the vehicle completely.

⚠WARNING

- **Incorrect wheel nuts or improperly tightened wheel nuts can cause the wheel to become loose or come off. This could cause an accident.**
- **Do not use oil or grease on the wheel studs or nuts. This could cause the nuts to become loose.**
- **Retighten the wheel nuts when the vehicle has been driven for 1,000 km (621 miles) (also in cases of a flat tire, etc.).**

As soon as possible, tighten the wheel nuts to the specified torque with a torque wrench.

Wheel nut tightening torque:

113 N·m (83 ft-lb)

The wheel nuts must be kept tightened to specification at all times. It is recommended that wheel nuts be tightened to specifications at each lubrication interval.

Adjust tire pressure to the COLD pressure.

COLD pressure: After vehicle has been parked for 3 hours or more or driven less than 1.6 km (1 mile).

COLD tire pressures are shown on the tire placard affixed to the driver side center pillar.

5. Securely store the flat tire, tools and jacking equipment in the vehicle.
6. Close the liftgate.

⚠WARNING

- **Always make sure that the spare tire and jacking equipment are properly secured after use. Such items can become dangerous projectiles in an accident or sudden stop.**
- **The spare tire is designed for emergency use. For additional information, see "Wheels and tires" (P. 8-35).**

REPAIRING A FLAT TIRE

If possible, have the vehicle towed to a facility that can repair or replace the flat tire. Using the tire emergency repair kit (if so equipped) may cause a malfunction of the tire pressure sensors and cause the low tire pressure warning light to illuminate.

If you have a flat tire, follow the instructions below.

Stopping the vehicle

1. Safely move the vehicle off the road and away from traffic.
2. Turn on the hazard warning flashers.
3. Park on a level surface and apply the parking brake. Push the park button to engage the P (Park) position.
4. Turn off the engine.
5. Raise the hood to warn other traffic and to signal professional road assistance personnel that you need assistance.
6. Have all passengers get out of the vehicle and stand in a safe place, away from traffic and clear of the vehicle.

⚠WARNING

- **Make sure the parking brake is securely applied and the shift position is placed in the P (Park) position.**
- **Never repair tires when the vehicle is on a slope, ice or slippery areas. This is hazardous.**
- **Never repair tires if oncoming traffic is close to your vehicle. Wait for professional road assistance.**

Locating the emergency tire repair kit (if so equipped)

Remove the emergency tire puncture repair kit located under the luggage board in the cargo area. The repair kit consists of the following items:

1. Tire sealant bottle
2. Air compressor
3. Speed restriction sticker

Before using the emergency tire repair kit

The emergency tire repair kit is not appropriate for the following situations. It will be necessary to contact a professional towing service in the following situations:

- The emergency repair kit's shelf life has expired.
- Cuts or punctures exceed approximately 4 mm (0.2 in).
- The tire sidewall is damaged.
- The tire is extremely low on air.
- The tire has come off of the inside or outside of the wheel.
- The wheel is damaged.
- The tire is punctured more than once.

Performing emergency repairs

⚠WARNING

Observe the following precautions when using the tire repair compound.

- **Swallowing the compound is dangerous. Immediately drink as much water as possible and seek prompt medical assistance.**
- **Rinse well with lots of water if compound comes into contact with skin or eyes. If irritation persists seek prompt medical attention.**
- **Keep the repair compound out of reach of children.**
- **The emergency repair compound may cause a malfunction of the tire pressure sensors and cause the low tire pressure warning light to illuminate. Have the tire pressure sensor replaced as soon as possible.**

NOTE:

Do not remove any nails or screws that have penetrated the tire when performing repairs.

1. Remove the emergency repair compound and the air compressor and shake bottle well.

NOTE:
Make sure to shake the bottle well before attaching the hose. Doing so afterward may cause the repair compound to splatter.

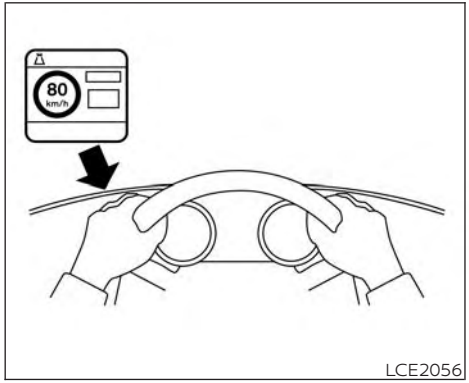

LCE2056

2. Open the lid of the air compressor, take out the speed restriction sticker, and put it in a location where the driver can see it driving.

⚠ WARNING

- **Do not apply the label to the center of the steering wheel pad, as this can prevent the air bag from properly functioning and cause serious injury.**
- **Avoid applying the label where it can obstruct the view of the speedometer and warning indicators.**

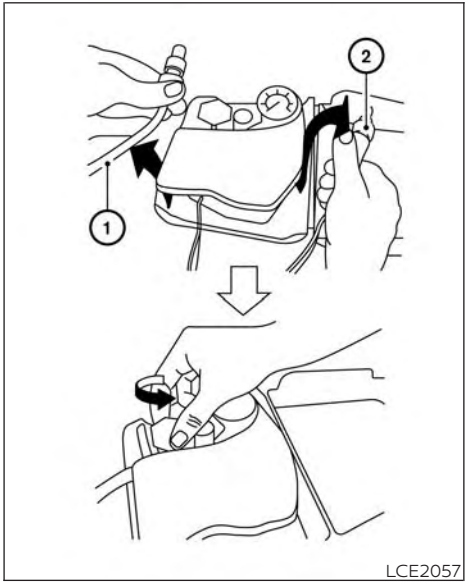

LCE2057

3. Take the hose ① and the power plug ② out of the air compressor. Remove the cap of the bottle holder from the air compressor.

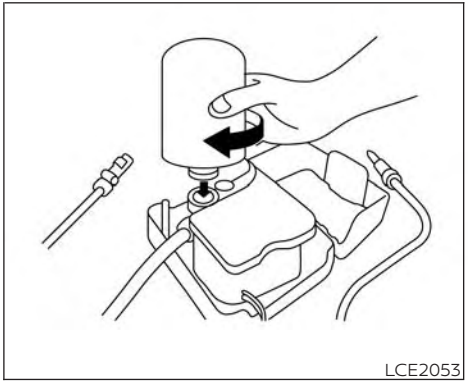
LCE2053

4. Remove the cap from the tire sealant bottle. Leave the bottle seal intact. Screw the bottle clockwise into the bottle holder to pierce the seal of the bottle.
5. Remove the cap from the tire valve on the flat tire.

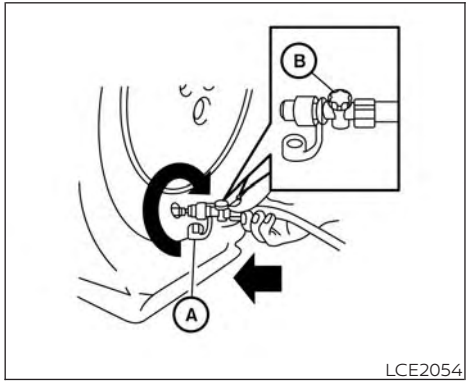

LCE2054

6. Remove the protective cap Ⓐ of the hose and screw the hose securely into the tire valve. Make sure that the pressure release valve Ⓑ is securely tightened.

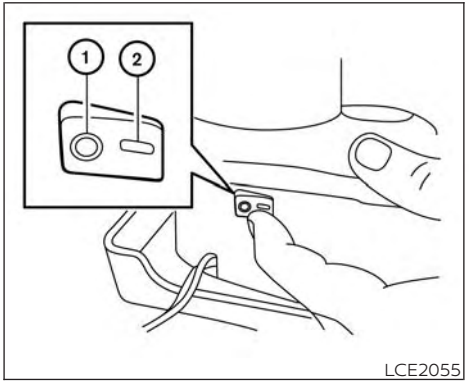

LCE2055

7. Make sure that the air compressor switch is in the off position ①, then insert the power plug into the power outlet of the vehicle.
8. Push the ignition switch to the ACC position. Turn the compressor switch to the on position ② and inflate the tire to the pressure that is specified on the tire placard that is affixed to the driver's side center pillar if possible, or to the minimum of 180 kPa (26 psi). Turn the air compressor off briefly in order to check the tire pressure with the tire pressure gauge.

If the tire is inflated to higher than the specified pressure, lower the tire pressure by releasing air with the pressure release valve.

⚠WARNING

The ring on the end of the air compressor hose may become hot after use so take care to avoid burns.

⚠CAUTION

Operating the air compressor for an extended period of time can result in damage to the compressor and will not allow you to fill the tire to the required air pressure. Avoid continuous operation of the compressor exceeding 10 minutes.

NOTE:

The compressor tire pressure gauge may show a pressure reading of 600 kPa (87 psi) for about 30 seconds while inflating the tire. The pressure gauge is indicating the pressure inside the sealant can. When the sealant has been injected into the tire the pressure gauge will drop and indicate actual tire pressure.

⚠ WARNING

- **To avoid serious personal injury while using the emergency tire repair kit:**
  - **Securely tighten the air compressor hose to the tire valve. Failure to do so can cause the sealant to spray into the air and get into your eyes or on the skin.**
  - **Do not stand directly beside the damaged tire while it is being inflated because of the risk of rupture. If there are any cracks or bumps, turn the air compressor off immediately.**
- **To avoid serious injury when stowing the emergency tire repair kit:**
  - **Keep the sealant bottle screwed into the compressor. Failure to do so can cause the sealant to spray into the air and get into your eyes or on the skin.**

If the tire pressure does not increase to **180 kPa (26 psi) within 10 minutes,** the tire may be seriously damaged and **the tire cannot be repaired with this tire repair kit.** Under this circumstance, contact a professional towing service for assistance.

9. When the tire pressure is at the specified pressure, turn the air compressor off. If the tire cannot be inflated to the specified pressure, the air compressor can be turned off at the minimum 180 kPa (26 psi). Remove the power plug from the outlet and quickly remove the hose from the tire valve. Attach the protective cap and valve cap. Properly stow the emergency tire repair kit in the cargo area.
10. Immediately drive the vehicle for 10 minutes or 3 km (2 miles) at a speed below 80 km/h (50 mph).
11. After driving, make sure that the air compressor switch is in the OFF position, then screw the hose into the tire valve. Check the pressure with the pressure gauge. Temporary repair is complete if the tire pressure does not drop.

Make sure that the tire pressure is adjusted to the pressure that is specified on the tire placard before driving.

⚠ CAUTION

If tire pressure falls below 130 kPa (18 psi) and remains low, even after repeating steps 5-11, the tire is not repairable using the tire emergency repair kit. Stop driving the vehicle and contact a professional towing service.

- It is recommended to replace the repaired tire with a new tire.
- Although the wheel can be reused by removing the repair compound, the tire valve must be replaced.
- The remaining repair compound is not usable and must be replaced.
- When attempting to repair the punctured tire at a later time the puncture may not be detectable. It is important to carefully monitor the tire pressure of the repaired tire. If the tire should continually lose air pressure you will need to have the tire replaced.

After tire repair

It is recommended that you visit a NISSAN dealer for tire repair or replacement as soon as possible.

⚠ WARNING

- **After using Emergency Tire Sealant to repair a minor tire puncture, do not drive the vehicle at speeds faster than 80 km/h (50 mph).**
- **Immediately after using Emergency Tire Sealant to repair a minor tire puncture, repair or replace the tire. It is recommended that you visit a NISSAN dealer for these services. The Emergency Tire Sealant cannot permanently seal a punctured tire. Continuing operation of the vehicle without a permanent tire repair can lead to a crash.**
- **If you used Emergency Tire Sealant to repair a minor tire puncture, the TPMS sensor will also need to be replaced in addition to repairing or replacing the tire. It is recommended that you visit a NISSAN dealer for these services.**
- **NISSAN recommends using only Genuine NISSAN Emergency Tire Sealant provided with your vehicle. Other tire sealants may damage the valve stem seal which can cause the tire to lose air pressure.**

To start your engine with a booster battery, the instructions and precautions below must be followed.

⚠ WARNING

- **If done incorrectly, jump starting can lead to a battery explosion, resulting in severe injury or death. It could also damage your vehicle.**
- **Explosive hydrogen gas is always present in the vicinity of the battery. Keep all sparks and flames away from the battery.**
- **Do not allow battery fluid to come into contact with eyes, skin, clothing or painted surfaces. Battery fluid is a corrosive sulfuric acid solution which can cause severe burns. If the fluid should come into contact with anything, immediately flush the contacted area with water.**
- **Keep battery out of the reach of children.**
- **The booster battery must be rated at 12 volts. Use of an improperly rated battery can damage your vehicle.**
- **Whenever working on or near a battery, always wear suitable eye protectors (for example, goggles or industrial safety spectacles) and remove rings, metal bands, or any other jewelry. Do not lean over the battery when jump starting.**
- **Do not attempt to jump start a frozen battery. It could explode and cause serious injury.**
- **Your vehicle has an automatic engine cooling fan. It could come on at any time. Keep hands and other objects away from it.**

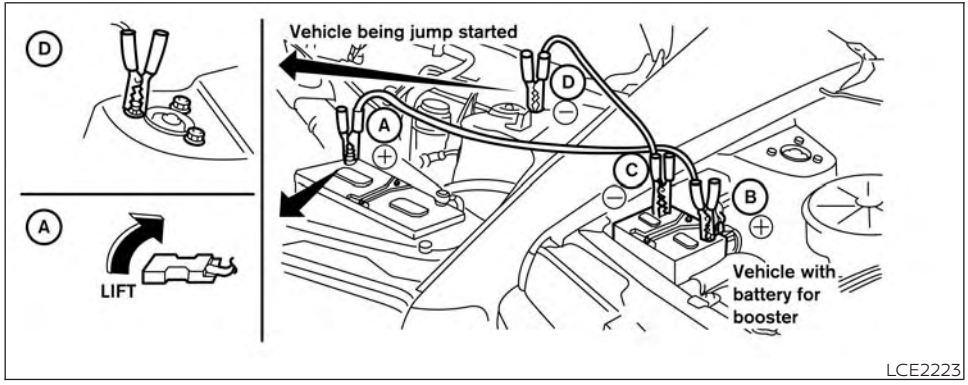

⚠WARNING

Always follow the instructions below. Failure to do so could result in damage to the charging system and cause personal injury.

1. If the booster battery is in another vehicle, position the two vehicles to bring their batteries near each other.

   Do not allow the two vehicles to touch.

2. Apply the parking brake. Push the park button to shift to the P (Park) position. Switch off all unnecessary electrical systems (lights, heater, air conditioner, etc.).
3. Place the ignition switch to the LOCK or OFF position.
4. Connect the jumper cables in the sequence illustrated (Ⓐ, Ⓑ, Ⓒ, Ⓓ).

⚠CAUTION

- **Always connect positive (+) to positive (+) and negative (–) to body ground (for example, strut mounting bolt, engine lift bracket, etc.) — not to the battery.**
- **Make sure the jumper cables do not touch moving parts in the engine compartment and that the cable clamps do not contact any other metal.**

5. Start the engine of the booster vehicle and let it run for a few minutes.
6. Keep the engine speed of the booster vehicle at about 2,000 rpm and start the engine of the vehicle being jump started.

⚠CAUTION

Do not keep the starter motor engaged for more than 10 seconds. If the engine does not start right away, place the ignition switch in the OFF position and wait 3 to 4 seconds before trying again.

7. After starting the engine, carefully disconnect the negative cable and then the positive cable.

PUSH STARTING

⚠CAUTION

Automatic transmission models cannot be push-started. Attempting to do so may cause transmission damage.

IF YOUR VEHICLE OVERHEATS

If your vehicle is overheating (indicated by an extremely high temperature gauge reading and the Low Oil Pressure: See Owner's Manual warning message appears in the vehicle information display), or if you feel a lack of engine power, detect abnormal noise, etc., take the following steps.

⚠WARNING

To avoid the danger of being scalded, never remove the radiator or coolant reservoir cap while the engine is still hot. When the radiator or coolant reservoir cap is removed, pressurized hot water will spurt out, possibly causing serious injury.

1. Move the vehicle safely off the road, apply the parking brake. Push the park button to shift to the P (Park) position.

   Do not stop the engine.

2. Turn off the air conditioner. Open all the windows, move the heater or air conditioner temperature control to maximum hot and fan control to high speed.
3. Get out of the vehicle. Look and listen for steam or coolant escaping from the radiator before opening the hood. (If steam or coolant is escaping, turn off the engine.) Do not open the hood further until no steam or coolant can be seen.
4. Open the engine hood.
5. Visually check drive belts for damage or looseness. Also check if the cooling fan is running. The radiator hoses and radiator should not leak water. If coolant is leaking, the water pump belt is missing or loose, or the cooling fan does not run, stop the engine.

⚠WARNING

- **Be careful not to allow your hands, hair, jewelry or clothing to come into contact with, or get caught in, engine belts or the engine cooling fan. The engine cooling fan can start at any time.**
- **If coolant is leaking, or the cooling fan does not run, stop the engine.**

6. After the engine cools down, check the coolant level in the engine coolant reservoir tank with the engine running. Add coolant to the engine coolant reservoir tank if necessary. Have your vehicle repaired. It is recommended that you visit a NISSAN dealer for this service.

When towing your vehicle, all jurisdictional and local regulations for towing must be followed. Incorrect towing equipment could damage your vehicle. Towing instructions are available from a NISSAN dealer. Local service operators are generally familiar with the applicable laws and procedures for towing. To assure proper towing and to prevent accidental damage to your vehicle, NISSAN recommends having a service operator tow your vehicle. It is advisable to have the service operator carefully read the following precautions:

⚠ WARNING

- **Never ride in a vehicle that is being towed.**
- **Never get under your vehicle after it has been lifted by a tow truck.**

⚠ CAUTION

- **When towing, make sure that the transmission, axles, steering system and powertrain are in working condition. Use dollies or flatbed if any of the listed systems are not working.**
- **Always attach safety chains before towing.**

For additional information about towing your vehicle behind a Recreational Vehicle, see "Flat towing for 4-Wheel Drive vehicles" (P. 5-227) or "Flat towing for front wheel drive vehicles" (P. 5-227).

TOWING RECOMMENDED BY NISSAN

NISSAN recommends towing your vehicle based upon the type of drivetrain. For additional information, refer to the diagrams in this section to ensure that your vehicle is properly towed.

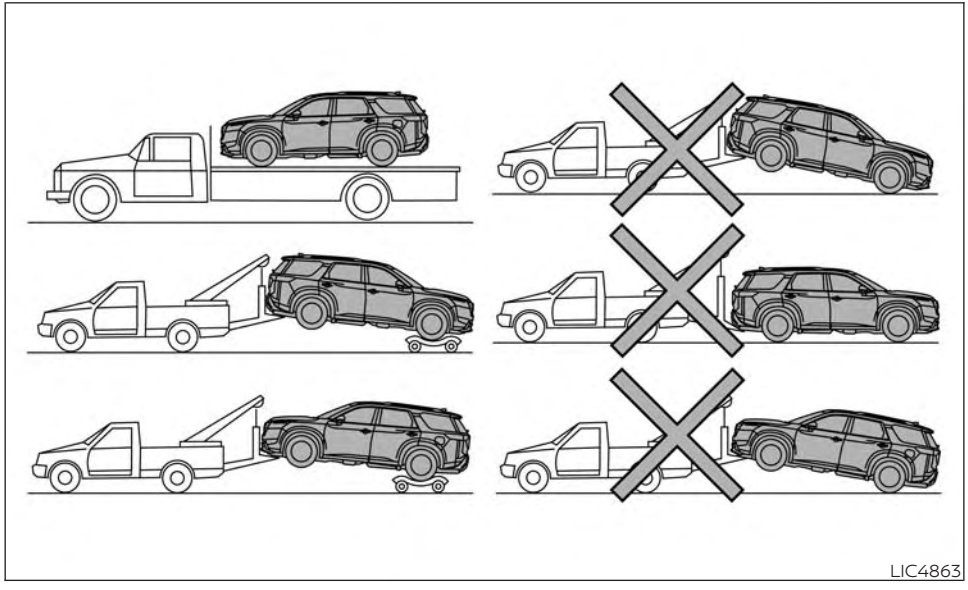

LIC4863

Four-Wheel Drive (4WD) models with automatic transmission

NISSAN recommends that towing dollies be used when towing your vehicle or place the vehicle on a flatbed truck as illustrated.

⚠ CAUTION

Never tow 4WD models equipped with an automatic transmission with any of the wheels on the ground as this may cause serious and expensive damage to the powertrain .

NOTE:

If the battery is completely drained the transmission will not manually shift to other positions.

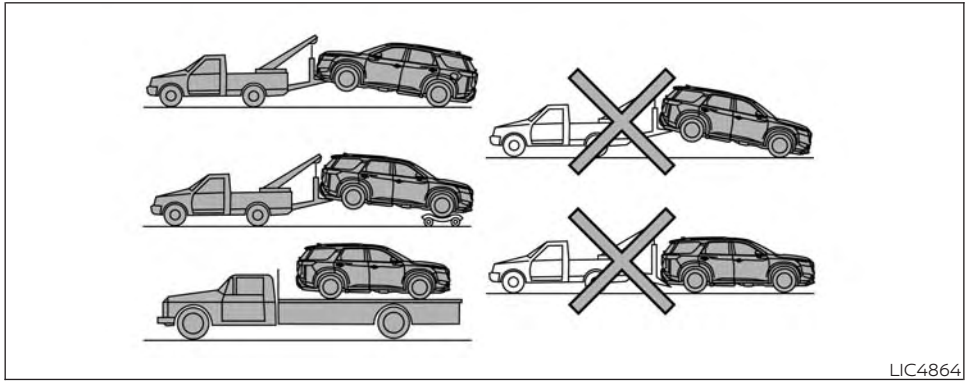

LIC4864

Two-Wheel Drive models with automatic transmission

NISSAN recommends that your vehicle be towed with the driving (front) wheels off the ground or place the vehicle on a flatbed truck as illustrated.

⚠ CAUTION

- **Never tow automatic transmission models with the front wheels on the ground or four wheels on the ground (forward or backward), as this may cause serious and expensive damage to the transmission. If it is necessary to tow the vehicle with the rear wheels raised always use towing dollies under the front wheels.**
- **When towing automatic transmission models with the rear wheels on the ground or on towing dollies:**
  - **Place the ignition switch in the OFF position, and secure the steering wheel in a straight-ahead position with a rope or similar device. Never secure the steering wheel by placing the ignition switch in the LOCK position. This may damage the steering lock mechanism (for models with a steering lock mechanism).**

NOTE:

If the battery is completely drained the transmission will not manually shift to other positions.

VEHICLE RECOVERY (freeing a stuck vehicle)

⚠WARNING

To avoid vehicle damage, serious personal injury or death when recovering a stuck vehicle:

- **Contact a professional towing service to recover the vehicle if you have any questions regarding the recovery procedure.**
- **Tow chains or cables must be attached only to main structural members of the vehicle.**
- **Do not use the vehicle tie-downs to tow or free a stuck vehicle.**
- **Only use devices specifically designed for vehicle recovery and follow the manufacturer's instructions.**
- **Always pull the recovery device straight out from the front of the vehicle. Never pull at an angle.**
- **Route recovery devices so they do not touch any part of the vehicle except the attachment point.**

If your vehicle is stuck in sand, snow, mud, etc., use a tow strap or other device designed specifically for vehicle recovery. Always follow the manufacturer's instructions for the recovery device.

Rocking a stuck vehicle

⚠WARNING

- **Stand clear of a stuck vehicle.**
- **Do not spin your tires at high speed. This could cause them to explode and result in serious injury. Parts of your vehicle could also overheat and be damaged.**

If your vehicle is stuck in sand, snow, mud, etc., use the following procedure:

1. Turn off the Vehicle Dynamic Control (VDC) or Electronic Stability Program (ESP) system or place the Drive Mode Selector in MUD/RUT (4WD models) or SAND (4WD models) mode.
2. Make sure the area in front and behind the vehicle is clear of obstructions.
3. Turn the steering wheel right and left to clear an area around the front tires.
4. Slowly rock the vehicle forward and backward.
   - Shift back and forth between R (Reverse) and D (Drive).
   - Apply the accelerator as little as possible to maintain the rocking motion.
   - Release the accelerator pedal before shifting between R (Reverse) and D (Drive).
   - Do not spin the tires above 55 km/h (35 mph).
5. If the vehicle cannot be freed after a few tries, contact a professional towing service to remove the vehicle.

7 Appearance and care

Cleaning exterior 7-2
Washing 7-2
Waxing 7-3
Removing spots 7-3
Underbody 7-3
Glass 7-3
Aluminum alloy wheels 7-3
Chrome parts 7-3
Tire dressings 7-4
Cleaning interior 7-4
Air fresheners 7-5
Power moonroof (if so equipped) 7-5
Floor mats (if so equipped) 7-5
Seat belts 7-6
Cleaning the seat tracks 7-6
Corrosion protection 7-7
Most common factors contributing to vehicle corrosion 7-7
Environmental factors influence the rate of corrosion 7-7
Protect your vehicle from corrosion 7-7

In order to maintain the appearance of your vehicle, it is important to take proper care of it.

To protect the paint surfaces, wash your vehicle as soon as you can:

- After a rainfall to prevent possible damage from acid rain.
- After driving on coastal roads.
- When contaminants such as soot, bird droppings, tree sap, metal particles or bugs get on the paint surface.
- When dust or mud builds up on the surface.

Whenever possible, store or park your vehicle inside a garage or in a covered area.

When it is necessary to park outside, park in a shady area or protect the vehicle with a body cover.

Be careful not to scratch the paint surface when putting on or removing the body cover.

WASHING

Wash dirt off with a wet sponge and plenty of water. Clean the vehicle thoroughly using a mild soap, a special vehicle soap or general purpose dishwashing liquid mixed with clean, lukewarm (never hot) water.

⚠ CAUTION

- **Do not concentrate water spray directly on the sonar sensors (if so equipped) on the bumper as this will result in damage to the sensors. Do not use pressure washers capable of spraying water over 8,274 kPa (1,200 psi) to wash your vehicle. Use of high-pressure washers over 8,274 kPa (1,200 psi) can result in damage to or removal of paint or graphics. Avoid using a high-pressure washer closer than 30 cm (12 inches) to the vehicle. Always use a wide-angle nozzle only, keep the nozzle moving and do not concentrate the water spray on any one area.**
- **Do not use car washes that use acid in the detergent. Some car washes, especially brushless ones, use some acid for cleaning. The acid may react with some plastic vehicle components, causing them to crack. This could affect their appearance, and also could cause them not to function properly. Always check with your car wash to confirm that acid is not used.**
- **Do not wash the vehicle with strong household soap, strong chemical detergents, gasoline or solvents.**
- **Do not wash the vehicle in direct sunlight or while the vehicle body is hot, as the surface may become water-spotted.**
- **Avoid using tight-napped or rough cloths, such as washing mitts. Care must be taken when removing caked-on dirt or other foreign substances so the paint surface is not scratched or damaged.**

Rinse the vehicle thoroughly with plenty of clean water.

Inside edges, seams and folds on the doors, hatches and hood are particularly vulnerable to the effects of road salt. Therefore, these areas must be cleaned regularly. Take care that the drain holes in the lower edge of the door are open. Spray water under the body and in the wheel wells to loosen the dirt and wash away road salt.

A damp chamois can be used to dry the vehicle to avoid water spots.

WAXING

Regular waxing protects the paint surface and helps retain new vehicle appearance. Polishing is recommended to remove built-up wax residue and to avoid a weathered appearance before re-applying wax.

A NISSAN dealer can assist you in choosing the proper product.

- Wax your vehicle only after a thorough washing. Follow the instructions supplied with the wax.
- Do not use a wax containing any abrasives, cutting compounds or cleaners that may damage the vehicle finish.

Machine compounding or aggressive polishing on a base coat/clear coat paint finish may dull the finish or leave swirl marks.

REMOVING SPOTS

Remove tar and oil spots, industrial dust, insects, and tree sap as quickly as possible from the surface of the paint to avoid lasting damage or staining. Special cleaning products are available at a NISSAN dealer or any automotive accessory store. It is recommended that you visit a NISSAN dealer for these products.

UNDERBODY

In areas where road salt is used in winter, it is necessary to clean the underbody regularly in order to prevent dirt and salt from building up and causing the acceleration of corrosion on the underbody and suspension. Before the winter period and again in the spring, the underseal must be checked and, if necessary, re-treated.

GLASS

Use glass cleaner to remove smoke and dust film from the glass surfaces. It is normal for glass to become coated with a film after the vehicle is parked in the hot sun. Glass cleaner and a soft cloth will easily remove this film.

⚠ CAUTION

When cleaning the inside of the windows, do not use sharp-edged tools, abrasive cleaners or chlorine-based disinfectant cleaners. They could damage the electrical conductors, radio antenna elements or rear window defogger elements

ALUMINUM ALLOY WHEELS

Wash the wheels regularly with a sponge dampened in a mild soap solution, especially during winter months in areas where road salt is used. If not removed, road salt can discolor the wheels.

⚠ CAUTION

Follow the directions below to avoid staining or discoloring the wheels:

- **Do not use a cleaner that uses strong acid or alkali contents to clean the wheels.**
- **Do not apply wheel cleaners to the wheels when they are hot. The wheel temperature should be the same as ambient temperature.**
- **Rinse the wheel to completely remove the cleaner within 15 minutes after the cleaner is applied.**

CHROME PARTS

Clean all chrome parts regularly with a non-abrasive chrome polish to maintain the finish.

TIRE DRESSINGS

NISSAN does not recommend the use of tire dressings. Tire manufacturers apply a coating to the tires to help reduce discoloration of the rubber. If a tire dressing is applied to the tires, it may react with the coating and form a compound. This compound may come off the tire while driving and stain the vehicle paint.

If you choose to use a tire dressing, take the following precautions:

- Use a water-based tire dressing. The coating on the tire dissolves more easily than with an oil-based tire dressing.
- Apply a light coat of tire dressing to help prevent it from entering the tire tread/grooves (where it would be difficult to remove).
- Wipe off excess tire dressing using a dry towel. Make sure the tire dressing is completely removed from the tire tread/grooves.
- Allow the tire dressing to dry as recommended by the tire dressing manufacturer.

Occasionally remove loose dust from the interior trim, plastic parts and seats using a vacuum cleaner or soft bristled brush. Wipe the vinyl and leather (if so equipped) surfaces with a clean, soft cloth dampened in mild soap solution, then wipe clean with a dry, soft cloth.

Regular care and cleaning is required in order to maintain the appearance of the leather (if so equipped).

Before using any fabric protector, read the manufacturer's recommendations. Some fabric protectors contain chemicals that may stain or bleach the seat material.

Use a cloth dampened only with water to clean the meter and gauge lens.

⚠ WARNING

Do not use water or acidic cleaners (hot steam cleaners) on the seat. This can damage the seat or occupant classification sensor. This can also affect the operation of the air bag system and result in serious personal injury.

⚠ CAUTION

- **Never use benzine, thinner or any similar material.**
- **Small dirt particles can be abrasive and damaging to leather surfaces and should be removed promptly. Do not use saddle soap, car waxes, polishes, oils, cleaning fluids, solvents, detergents or ammonia-based cleaners as they may damage the leather's natural finish.**
- **Never use fabric protectors unless recommended by the manufacturer.**
- **Do not use glass or plastic cleaner on meter or gauge lens covers. It may damage the lens cover.**
- **Never use chloride solutions for cleaning aluminum decoratives (if so equipped), damage may occur.**

AIR FRESHENERS

Most air fresheners use a solvent that could affect the vehicle interior. If you use an air freshener, take the following precautions:

- Hanging-type air fresheners can cause permanent discoloration when they contact vehicle interior surfaces. Place the air freshener in a location that allows it to hang free and not contact an interior surface.
- Liquid-type air fresheners typically clip on the vents. These products can cause immediate damage and discoloration when spilled on interior surfaces.

Carefully read and follow the manufacturer's instructions before using the air fresheners.

POWER MOONROOF (if so equipped)

The sunshade is made from a tricot material.

⚠ CAUTION

To help prevent damaging the moonroof while cleaning:

- **Do not rub the material with a cloth. Doing so can damage the surface of the material or cause a stain to spread.**
- **Never use benzine, thinner or any similar chemical to clean the sunshade. This may discolor the moonroof and damage the surface.**
- **Clean water based stains by patting the surface with a clean soft cloth dampened in warm water. Press a clean dry cloth onto the surface to remove as much dampness as possible and then let air dry.**
- **Clean oil based stains by patting the surface with a clean soft cloth dampened in warm water. Press a clean dry cloth onto the surface to remove as much dampness as possible and then let air dry.**

FLOOR MATS (if so equipped)

⚠ WARNING

To avoid potential pedal interference that may result in a collision, injury or death:

- **NEVER place a floor mat on top of another floor mat in the driver front position.**
- **Use only Genuine NISSAN floor mats specifically designed for use in your vehicle model. It is recommended that you visit a NISSAN dealer for additional information.**
- **Properly position the mats in the floorwell using the floor mat positioning aid. For additional information, see "Floor mat positioning aid" (P. 7-6).**

The use of Genuine NISSAN floor mats can extend the life of your vehicle carpet and make it easier to clean the interior. Mats should be maintained with regular cleaning and replaced if they become excessively worn.

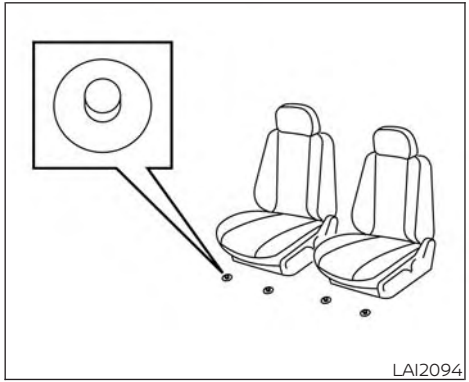

Floor mat positioning aid

This vehicle includes the following floor mat positioning aids to help keep your floor mats in place:

- Two driver's side front floor mat position aids.
- Two passenger's side front floor mat position aids.

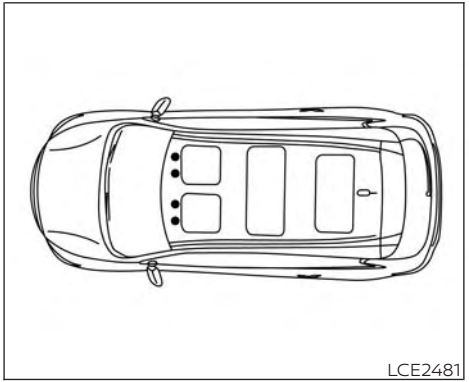

Positioning aids

Genuine NISSAN floor mats have been specially designed for your vehicle model. The floor mats have grommet holes incorporated in them. Position each mat by placing the floor mat bracket hook through the floor mat grommet holes while centering the mat in the floorwell.

Periodically check to make certain the mats are properly positioned.

SEAT BELTS

The seat belts can be cleaned by wiping them with a sponge dampened in a mild soap solution. Allow the belts to dry completely in the shade before using them. For additional information, see "Seat belt maintenance" (P. 1-29).

⚠ WARNING

Do not allow wet seat belts to roll up in the retractor. NEVER use bleach, dye or chemical solvents to clean the seat belts, since these materials may severely weaken the seat belt webbing.

CLEANING THE SEAT TRACKS

⚠ CAUTION

Periodically clean the seat tracks to prevent reduction of ability to move the seats.

Clean periodically with a high-powered vacuum cleaner. Dirt and debris may reduce the ability to adjust the seat. A wet cleansing agent may be used if necessary.

MOST COMMON FACTORS CONTRIBUTING TO VEHICLE CORROSION

Most vehicle corrosion is caused by:

- The accumulation of moisture-retaining dirt and debris in body panel sections, cavities, and other areas.
- Damage to paint and other protective coatings caused by gravel and stone chips or minor traffic collisions.

ENVIRONMENTAL FACTORS INFLUENCE THE RATE OF CORROSION

Moisture

Accumulation of sand, dirt and water on the vehicle body underside can accelerate corrosion. Wet floor coverings will not dry completely inside the vehicle and should be removed for drying to avoid floor panel corrosion.

Relative humidity

Corrosion will be accelerated in areas of high relative humidity, especially those areas where the temperatures stay above freezing and where atmospheric pollution exists and road salt is used.

Temperature

High temperatures accelerate the rate of corrosion to those parts which are not well ventilated.

Air pollution

Industrial pollution, the presence of salt in the air in coastal areas, or heavy road salt use accelerates the corrosion process. Road salt also accelerates the disintegration of paint surfaces.

PROTECT YOUR VEHICLE FROM CORROSION

- Wash and wax your vehicle often to keep the vehicle clean.
- Always check for minor damage to the paint and repair it as soon as possible.
- Keep drain holes at the bottom of the doors open to avoid water accumulation.
- Check the underbody for accumulation of sand, dirt or salt. If present, wash with water as soon as possible.

⚠ CAUTION

- **NEVER remove dirt, sand or other debris from the passenger compartment by washing it out with a hose. Remove dirt with a vacuum cleaner or broom.**
- **Never allow water or other liquids to come in contact with electronic components inside the vehicle as this may damage them.**

Chemicals used for road surface de-icing are extremely corrosive. They accelerate corrosion and deterioration of underbody components such as the exhaust system, fuel and brake lines, brake cables, floor pan and fenders.

In winter, the underbody must be cleaned periodically.

For additional protection against rust and corrosion, which may be required in some areas, it is recommended that you visit a NISSAN dealer.

MEMO

8 Maintenance and do-it-yourself

Maintenance requirements 8-2
General maintenance 8-2
Explanation of general maintenance items 8-2
Maintenance precautions 8-5
Engine compartment check locations 8-7
Engine cooling system 8-9
Checking engine coolant level 8-10
Changing engine coolant 8-10
Engine oil 8-11
Checking engine oil level 8-11
Changing engine oil and oil filter 8-12
Automatic Transmission Fluid (ATF) 8-15
Brake fluid 8-16
Windshield-washer fluid 8-16
Windshield-washer fluid reservoir 8-16
Battery 8-18
Jump starting 8-19
Variable voltage control system 8-20
Drive belt 8-20
Spark plugs 8-21
Replacing spark plugs 8-21
Air cleaner 8-22
Air conditioner filter 8-22
Windshield wiper blades 8-23
Cleaning 8-23
Replacing 8-23
Brakes 8-25
Checking brake pedal 8-25
Brake booster 8-26
Fuses 8-26
Engine compartment 8-27
Passenger compartment 8-28
Battery replacement 8-30
NISSAN Intelligent Key® 8-30
Lights 8-32
Headlights 8-32
Fog lights (if so equipped) 8-32
Exterior and interior lights 8-33
Wheels and tires 8-35
Tire pressure 8-35
Types of tires 8-38
Tire chains 8-39
Changing wheels and tires 8-40

Your NISSAN is designed to have minimum maintenance requirements with long service intervals to save you both time and money; however, some day-to-day and regular maintenance is essential to maintain your NISSAN's good mechanical condition as well as its emissions and engine performance.

It is the owner's responsibility to make sure that the scheduled maintenance, as well as general maintenance, is performed.

As the vehicle owner, you are the only one who can ensure that your vehicle receives proper maintenance. You are a vital link in the maintenance chain.

Scheduled maintenance

For your convenience, both required and optional scheduled maintenance items are described and listed in a separate maintenance booklet. You must refer to that guide to ensure that necessary maintenance is performed on your NISSAN at regular intervals.

General maintenance

General maintenance includes those items which should be checked during normal day-to-day operation. They are essential for proper vehicle operation. It is your responsibility to perform these maintenance procedures regularly as prescribed.

Performing general maintenance checks requires minimal mechanical skill and only a few general automotive tools.

These checks or inspections can be done by you, a qualified technician or, if you prefer, a NISSAN dealer.

Where to go for service

If maintenance service is required or your vehicle appears to malfunction, have the systems checked and corrected. It is recommended that you visit a NISSAN dealer for this service.

NISSAN technicians are well-trained specialists who are kept up-to-date with the latest service information through technical bulletins, service tips and in-dealership training programs. They are completely qualified to work on NISSAN vehicles **before** they work on your vehicle rather than after they have worked on it.

You can be confident that a NISSAN dealer's service department performs the best job to meet the maintenance requirements on your vehicle — in a reliable and economical way.

During the normal day-to-day operation of the vehicle, general maintenance should be performed regularly as prescribed in this section. If you detect any unusual sounds, vibrations or smells, be sure to check for the cause or have a NISSAN dealer do it promptly. In addition, it is recommended that you visit a NISSAN dealer if you think that repairs are required.

When performing any checks or maintenance work, see "Maintenance precautions" (P. 8-5).

EXPLANATION OF GENERAL MAINTENANCE ITEMS

⚠WARNING

Failure to follow the procedures listed within this section may result in personal injury.

Additional information on the following items with " * " is found in this section.

Outside the vehicle

The maintenance items listed here should be performed from time to time unless otherwise specified.

Doors and hood Check that all doors and the hood operate smoothly as well as the back door, trunk lid and hatch. Also make sure that all latches lock securely. Lubricate if necessary. Make sure that the secondary latch keeps the hood from opening when the primary latch is released.

When driving in areas using road salt or other corrosive materials, check lubrication frequently.

Check that the gas stays or struts properly and securely hold the hood, trunk, or rear hatch in a fully open position. If the hood, trunk, or rear hatch is not held open, have the gas stays or struts replaced.

Lights* Clean the headlights on a regular basis. Make sure that the headlights, stop lights, tail lights, turn signal lights and other lights are all operating properly and installed securely. Also check the aim of the headlights.

Tires* Check the pressure with a gauge often and always prior to long distance trips. Adjust the pressure in all tires, including the spare, to the pressure specified. Check carefully for damage, cuts or excessive wear.

Tire rotation* In the case that Two-Wheel Drive (2WD) and front and rear tires are same size; tires should be rotated every 10,000 km (6,000 miles). Tires marked with directional indicators can only be rotated between front and rear. Make sure that the directional indicators point in the direction of wheel rotation after the tire rotation is completed.

In the case that Four-Wheel Drive and All Wheel Drive (4WD/AWD) and front and rear tires are the same size; tires should be rotated every 5,000 km (3,000 miles). Tires marked with directional indicators can only be rotated between front and rear. Make sure that the directional indicators point in the direction of wheel rotation after the tire rotation is completed.

In the case that front tires are different size from rear tires; tires cannot be rotated.

The timing for tire rotation may vary according to your driving habits and the road surface conditions.

Tire Pressure Monitoring System (TPMS) tire pressure sensor (if so equipped) It is recommended that you replace the TPMS tire pressure sensor assembly when the tires are replaced due to wear or age.

Wheel alignment and balance If the vehicle should pull to either side while driving on a straight and level road, or if you detect uneven or abnormal tire wear, there may be a need for wheel alignment. If the steering wheel or seat vibrates at normal highway speeds, wheel balancing may be needed.

Windshield Clean the windshield on a regular basis. Check the windshield at least every six months for cracks or other damage. Repair as necessary.

Wiper blades* Check for cracks or wear if not functioning correctly. Replace as necessary.

Inside the vehicle

The maintenance items listed here should be checked on a regular basis, such as when performing periodic maintenance, cleaning the vehicle, etc.

Accelerator pedal Check the pedal for smooth operation and make sure the pedal does not catch or require uneven effort. Keep the floor mat away from the pedal.

Brake pedal* Check the pedal for smooth operation and make sure that it is the proper distance from the floor mat when depressed fully. Check the brake booster function. Be sure to keep the floor mat away from the pedal.

Parking brake* Check the parking brake operation regularly. Check that the lever (if so equipped) or the pedal (if so equipped) has the proper travel. Also make sure that the vehicle is held securely on a fairly steep hill when only the parking brake is applied.

Seat belts Check that all parts of the seat belt system (for example, buckles, anchors, adjusters and retractors) operate properly and smoothly, and are installed securely. Check the belt webbing for cuts, fraying, wear or damage.

Steering wheel Check for changes in the steering condition, such as excessive play, hard steering or strange noises.

Warning lights and chimes Make sure that all warning lights and chimes are operating properly.

Windshield defogger Check that the air comes out of the defogger outlets properly and in good quantity when operating the heater or air conditioner.

Windshield wiper and washer* Check that the wipers and washer operate properly and that the wipers do not streak.

Under the hood and vehicle

The maintenance items listed here should be checked periodically (for example, each time you check the engine oil or refuel).

Battery* (for maintenance free batteries) This vehicle is equipped with a sealed maintenance free battery. It is recommended that you visit a NISSAN dealer for service.

NOTE:

Care should be taken to avoid situations that can lead to potential battery discharge and potential no-start conditions such as:

1. **Installation or extended use of electronic accessories that consume battery power when the engine is not running (Phone chargers, GPS, DVD players, etc.).**
2. **Vehicle is not driven regularly and/or only driven short distances.**

In these cases, the battery may need to be charged to maintain battery health.

Brake (and clutch) fluid level(s)* For Manual Transmission (M/T) model; make sure that the brake and clutch fluid levels are between the MAX and MIN lines on the reservoirs.

Except for Manual Transmission (M/T) model; make sure that the brake fluid level is between the MAX and MIN lines on the reservoir.

Engine coolant level* Check the coolant level when the engine is cold. Make sure that the coolant level is between the MAX and MIN lines on the reservoir.

Engine drive belt(s)* Make sure the drive belt(s) is not frayed, worn, cracked or oily.

Engine oil level* Check the level after parking the vehicle (on level ground) and turning off the engine.

Exhaust system Make sure there are no loose supports, cracks or holes. If the sound of the exhaust seems unusual or there is a smell of exhaust fumes, immediately have the exhaust system inspected. It is recommended that you visit a NISSAN dealer for this service. For additional information, see "Exhaust gas (carbon monoxide)" (P. 5-6).

NOTE:
Visually inspect the exhaust pipes, muffler and hangers for leaks, cracks, deterioration, and damage. Tighten connections or replace parts as necessary.

Fluid leaks Check under the vehicle for fuel, oil, water or other fluid leaks after the vehicle has been parked for a while. Water dripping from the air conditioner after use is normal. If you should notice any leaks or if fuel fumes are evident, check for the cause and have it corrected immediately.

Windshield-washer fluid* Check that there is adequate fluid in the reservoir.

When performing any inspection or maintenance work on your vehicle, always take care to prevent serious accidental injury to yourself or damage to the vehicle. The following are general precautions which should be closely observed.

⚠WARNING

- **Park the vehicle on a level surface, apply the parking brake securely and block the wheels to prevent the vehicle from moving. Push the park button to shift to the P (Park) position.**
- **Be sure the ignition switch is in the OFF or LOCK position when performing any parts replacement or repairs.**
- **If you must work with the engine running, keep your hands, clothing, hair and tools away from moving fans, belts and any other moving parts.**
- **It is advisable to secure or remove any loose clothing and remove any jewelry, such as rings, watches, etc. before working on your vehicle.**
- **Always wear eye protection whenever you work on your vehicle.**
- **Your vehicle is equipped with an automatic engine cooling fan. It may come on at any time without warning, even if the ignition switch is in the OFF position and the engine is not running. To avoid injury, always disconnect the negative battery cable before working near the fan.**
- **If you must run the engine in an enclosed space such as a garage, be sure there is proper ventilation for exhaust gases to escape.**
- **Never get under the vehicle while it is supported only by a jack. If it is necessary to work under the vehicle, support it with safety stands.**
- **Keep smoking materials, flame and sparks away from the fuel tank and battery.**
- **Because the fuel lines on gasoline engine models are under high pressure even when the engine is off, it is recommended that you visit a NISSAN dealer for service of the fuel filter or fuel lines.**

⚠ CAUTION

- **Do not work under the hood while the engine is hot. Turn the engine off and wait until it cools down.**
- **Avoid contact with used engine oil and coolant. Improperly disposed engine oil, engine coolant and/or other vehicle fluids can damage the environment. Always conform to local regulations for disposal of vehicle fluid.**
- **Never leave the engine or automatic transmission related component harnesses disconnected while the ignition switch is in the ON position.**
- **Never connect or disconnect the battery or any transistorized component while the ignition switch is in the ON position.**

NOTE:

If the battery is completely drained the transmission will not manually shift to other positions.

This "Maintenance and do-it-yourself" section gives instructions regarding only those items which are relatively easy for an owner to perform.

You should be aware that incomplete or improper servicing may result in operating difficulties or excessive emissions, and could affect warranty coverage. **If in doubt about any servicing, it is recommended that you have it done by a NISSAN dealer.**

ENGINE COMPARTMENT CHECK LOCATIONS

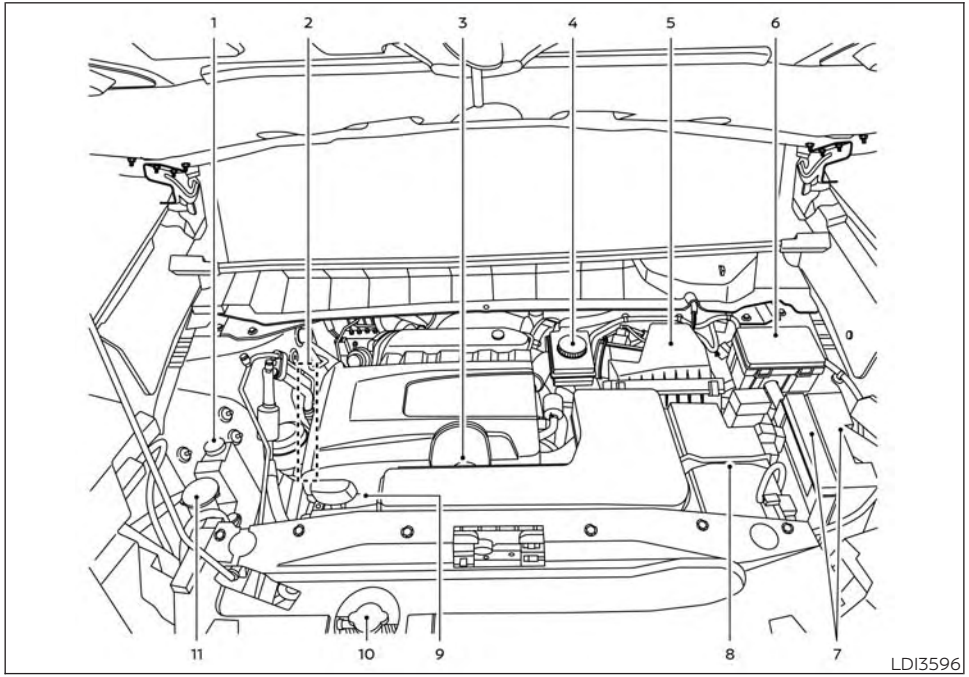

3.5L 6 cylinder (VQ35DD engine model) (LHD models only)

1. Engine coolant reservoir
2. Drive belt location
3. Engine oil filler cap
4. Brake fluid reservoir
5. Air cleaner
6. Fuse box
7. Fuse/Fusible link box
8. Battery
9. Engine oil dipstick
10. Radiator cap
11. Windshield-washer fluid reservoir

NOTE:
Your vehicle may not be equipped with an engine cover.

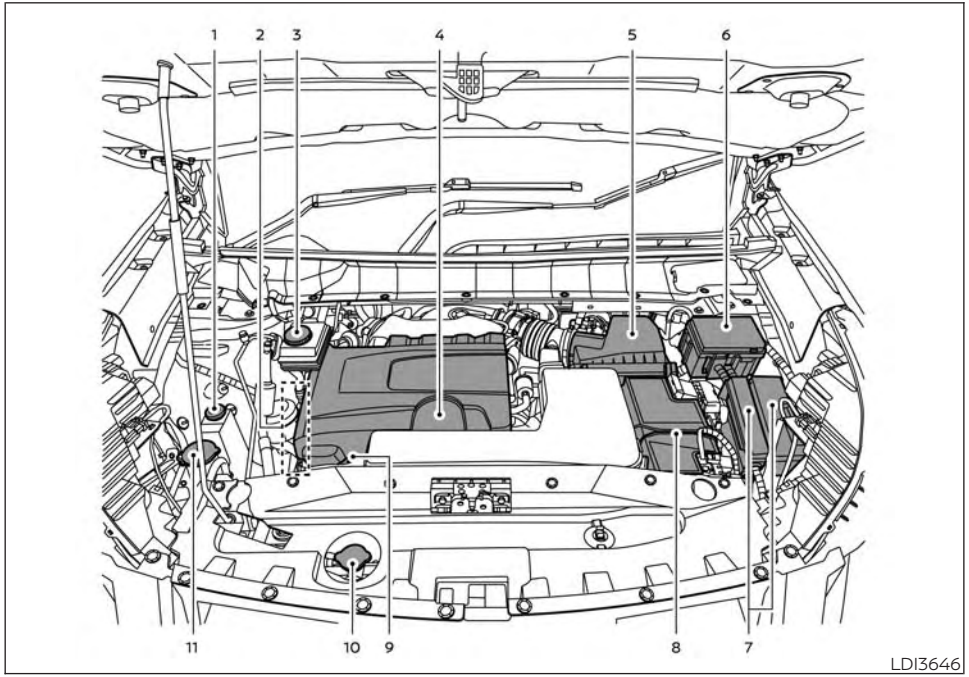

3.5L 6 cylinder (VQ35DD engine model) (RHD models only)

1. Engine coolant reservoir
2. Drive belt location
3. Brake fluid reservoir
4. Engine oil filler cap
5. Air cleaner
6. Fuse box
7. Fuse/Fusible link box
8. Battery
9. Engine oil dipstick
10. Radiator cap
11. Windshield-washer fluid reservoir

NOTE:
Your vehicle may not be equipped with an engine cover.

The engine cooling system is filled at the factory with Genuine NISSAN Engine Coolant to provide year-round antifreeze and coolant protection. The antifreeze solution contains rust and corrosion inhibitors. Additional engine cooling system additives are not necessary.

⚠ WARNING

- **Never remove the radiator or coolant reservoir cap when the engine is hot. Wait until the engine and radiator cool down. Serious burns could be caused by high pressure fluid escaping from the radiator. For additional information, see "If your vehicle overheats" (P. 6-18).**
- **The radiator is equipped with a pressure type radiator cap. To prevent engine damage, use only a Genuine NISSAN radiator cap.**
- **Engine coolant is poisonous and should be stored carefully in a marked containers out of the reach of children.**

⚠ CAUTION

- **Never use any cooling system additives such as radiator sealer. Additives may clog the cooling system and cause damage to the engine, transmission and/or cooling system.**
- **When adding or replacing coolant, be sure to use only Genuine NISSAN Engine Coolant or equivalent in its quality with the proper mixture ratio. Examples of the mixture ratio are shown below:**
- **The use of other types of coolant solutions other than a Genuine NISSAN Engine Coolant or equivalent may damage the engine cooling system.**

Outside temperature down to		Composition	
°C	°F	Genuine NISSAN Engine Coolant (concentrated) or equivalent in quality	Demineralized water or distilled water
-15	5	30%	70%
-35	-30	50%	50%

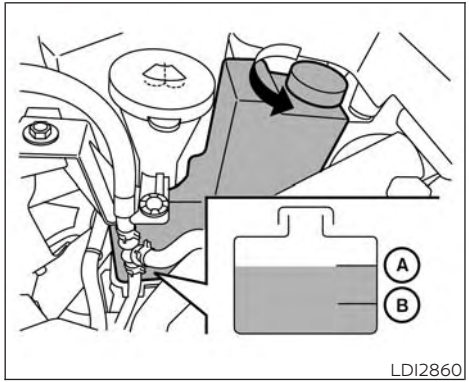

CHECKING ENGINE COOLANT LEVEL

Check the coolant level **in the reservoir when the engine is cold.** If the coolant level is below the MIN level Ⓑ, add coolant to the MAX level Ⓐ. If the reservoir is empty, check the coolant level in the radiator **when the engine is cold.** If there is insufficient coolant in the radiator, fill the radiator with coolant up to the filler opening and also add it to the reservoir up to the MAX level Ⓐ.

If the cooling system frequently requires coolant, have it checked. It is recommended that you visit a NISSAN dealer for this service.

For additional information on the location of the engine coolant reservoir, see "Engine compartment check locations" (P. 8-7).

CHANGING ENGINE COOLANT

A NISSAN dealer can change the engine coolant. The service procedure can be found in the NISSAN Service Manual.

Improper servicing can result in reduced heater performance and engine overheating.

⚠WARNING

- **To avoid the danger of being scalded, never change the coolant when the engine is hot.**
- **Never remove the radiator or engine coolant reservoir cap when the engine is hot. Serious burns could be caused by high pressure fluid escaping from the radiator.**
- **Avoid direct skin contact with used coolant. If skin contact is made, wash thoroughly with soap or hand cleaner as soon as possible.**
- **Keep coolant out of the reach of children and pets.**

Engine coolant must be disposed of properly. Check your local regulations.

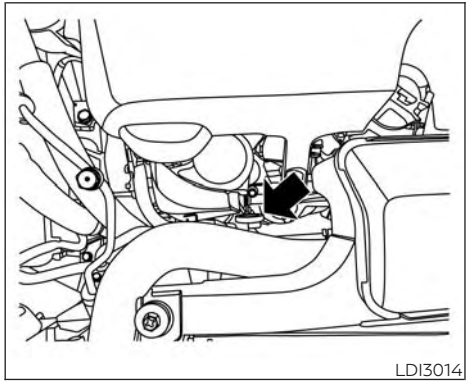
LDI3014

CHECKING ENGINE OIL LEVEL

1. Park the vehicle on a level surface and apply the parking brake.
2. Start the engine and let it idle until it reaches operating temperature.
3. Turn off the engine. **Wait more than 10 minutes for the oil to drain back into the oil pan.**
4. Remove the dipstick and wipe it clean. Reinsert it all the way.

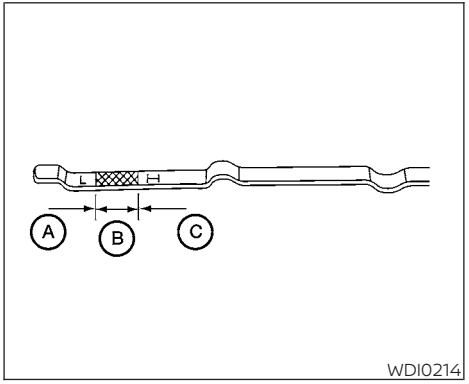

WDI0214

5. Remove the dipstick again and check the oil level. It should be between the H (High) and L (Low) marks Ⓑ. This is the normal operating oil level range. If the oil level is below the L (Low) mark Ⓐ, remove the oil filler cap and pour recommended oil through the opening. **Do not fill oil level above H (High) mark Ⓒ.**
6. Recheck the oil level with the dipstick.

It is normal to add some oil between oil maintenance intervals or during the break-in period, depending on the severity of operating conditions.

⚠ CAUTION

Oil level should be checked regularly. Operating the engine with an insufficient amount of oil can damage the engine, and such damage is not covered by warranty.

CHANGING ENGINE OIL AND OIL FILTER

For additional information on engine oil and oil filter change, refer to the instructions outlined in this section.

Vehicle set-up

1. Park the vehicle on a level surface and apply the parking brake.
2. Run the engine until it reaches operating temperature.
3. Turn the engine off and wait for 15 minutes.
4. Raise and support the vehicle using a suitable floor jack and safety jack stands.

- Place the safety jack stands under the vehicle jack-up points.
- A suitable adapter should be attached to the jack stand saddle.

⚠CAUTION

Make sure the correct lifting and support points are used to avoid vehicle damage.

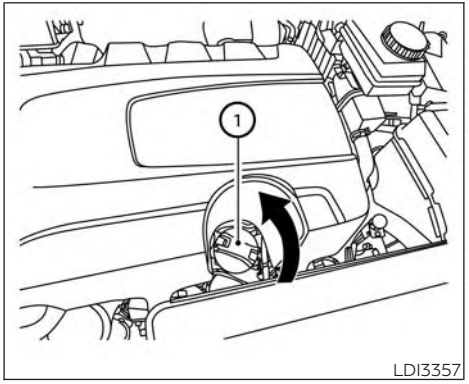

① **Oil filler cap**

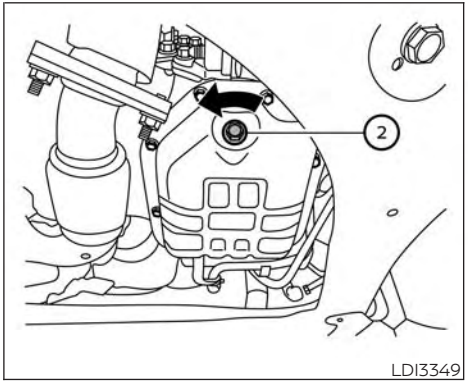

② **Oil drain plug**

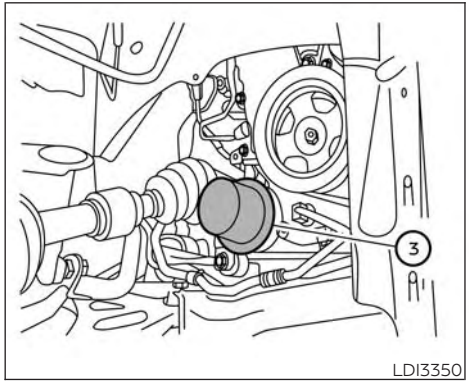

③ **Oil filter**

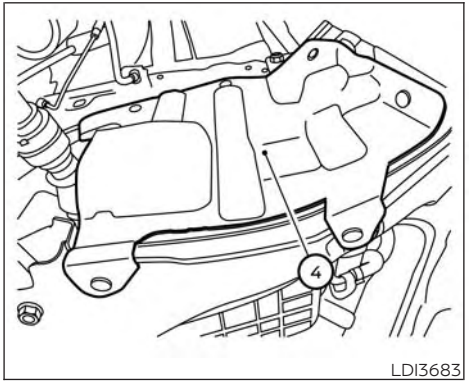

④ **Right engine protector**

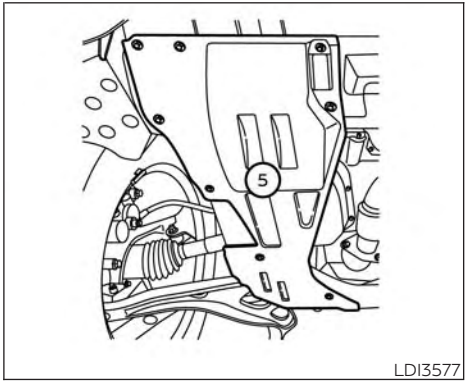

⑤ **Front under cover**

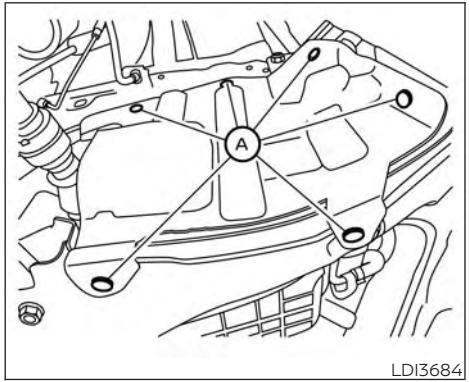

Right engine protector

Removal of engine protectors

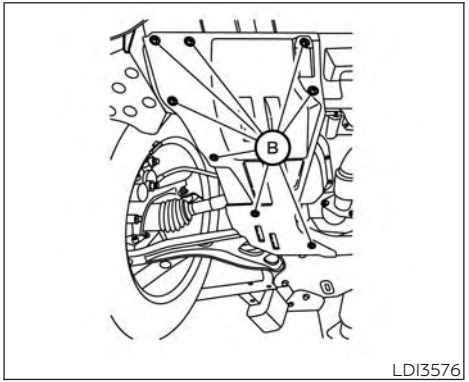

Front under cover

1. Remove pins Ⓐ and right engine protector.
2. Remove pins Ⓑ and front under cover.

Engine oil and filter

1. Place a large drain pan under the drain plug and oil filter.
2. Remove the oil filler cap.
3. Remove the drain plug with a wrench by turning it counterclockwise and completely drain the oil.

⚠ CAUTION

Be careful not to burn yourself, as the engine oil is hot.

⚠ WARNING

- **Prolonged and repeated contact with used engine oil may cause skin cancer.**
- **Try to avoid direct skin contact with used oil. If skin contact is made, wash thoroughly with soap or hand cleaner as soon as possible.**
- **Keep used engine oil out of reach of children.**

4. Loosen the oil filter with an oil filter wrench by turning it counterclockwise. Remove the oil filter by turning it by hand.
5. Wipe the engine oil filter mounting surface with a clean rag.

⚠ CAUTION

Be sure to remove any old gasket material remaining on the sealing surface of the engine. Failure to do so could lead to an oil leak and engine damage.

- **The dipstick must be inserted in place to prevent oil spillage from the dipstick hole when filling the engine with oil.**

6. Coat the gasket on the new filter with clean engine oil.
7. Screw in the oil filter clockwise until a slight resistance is felt, then tighten additionally more than 2/3 turn.

   Oil filter tightening torque:
   15.0 to 21.0 N·m (11 to 15 ft-lb)

8. Clean and re-install the drain plug with a new washer. Securely tighten the drain plug with a wrench. Do not use excessive force.

   Drain plug tightening torque:
   29.4 to 39.2 N·m (22 to 29 ft-lb)

9. Refill the engine with the recommended oil through the oil filler opening, and install the oil filler cap securely.

For additional information about drain and refill capacity, see "Recommended fluids/lubricants and capacities" (P. 9-2). The drain and refill capacity depends on the oil temperature and drain time. Use these specifications for reference only. Always use the dipstick to determine the proper amount of oil in the engine.

10. Start the engine and check for leakage around the drain plug and the oil filter. Correct as required. Turn the engine off and wait more than 15 minutes. Check the oil level with the dipstick. Add engine oil if necessary.

After the operation

1. Reinstall engine protectors in reverse order of removal.
2. Lower the vehicle carefully to the ground.
3. Reset oil and oil filter maintenance reminder. For additional information, see "Vehicle information display 7 inch (18 cm) Type A" (P. 2-24) or "Vehicle information display 12.3 inch (31 cm) Type B" (P. 2-49).

- Dispose of waste oil and filter properly.
- Check your local regulations.

When checking or replacement is required, it is recommended that you visit a NISSAN dealer for this service.

⚠ CAUTION

- **NISSAN recommends using Genuine NISSAN Matic R ATF. Do not mix with other fluids.**
- **Do not use CVT fluid or manual transmission fluid in this transmission. Damage caused by the use of fluids other than as recommended is not covered by the warranty.**
- **Using fluids that are not equivalent to Genuine NISSAN Matic R ATF may also damage the transmission. Damage caused by the use of fluids other than as recommended is not covered by the warranty.**

The specified automatic transmission fluid is also described on caution labels located in the engine compartment.

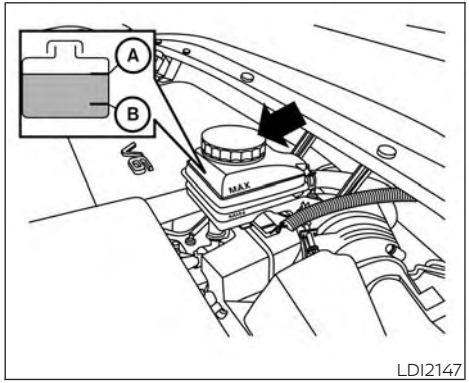

⚠ WARNING

- **Use only new fluid from a sealed container. Old, inferior or contaminated fluid may damage the brake system. The use of improper fluids can damage the brake system and affect the vehicle's stopping ability.**
- **Clean the filler cap before removing.**
- **Brake fluid is poisonous and should be stored carefully in marked containers out of reach of children.**

⚠ CAUTION

Do not spill the fluid on any painted surfaces. This will damage the paint. If fluid is spilled, immediately wash the surface with water.

Check the fluid level in the reservoir. If the brake fluid is below the MIN line Ⓑ, the brake warning light will illuminate. Add brake fluid up to the MAX line Ⓐ. For additional information on brake fluid type, see "Recommended fluids/lubricants and capacities" (P. 9-2).

If the brake fluid must be added frequently, the brake system should be thoroughly checked. It is recommended that you visit a NISSAN dealer for this service.

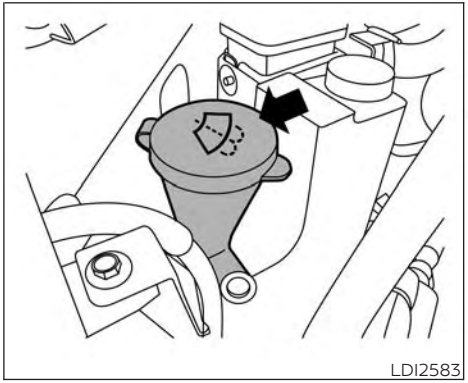

WINDSHIELD-WASHER FLUID RESERVOIR

Fill the windshield-washer fluid reservoir periodically. Add windshield-washer fluid when the "Low Washer Fluid" warning appears in the vehicle information display.

To fill the windshield-washer fluid reservoir, lift the cap off the reservoir and pour the windshield-washer fluid into the reservoir opening.

Add a washer solvent to the washer for better cleaning. In the winter season, add a windshield-washer antifreeze. Follow the manufacturer's instructions for the mixture ratio.

Refill the reservoir more frequently when driving conditions require an increased amount of windshield-washer fluid.

Recommended fluid is Genuine NISSAN Windshield Washer Concentrate Cleaner & Antifreeze or equivalent.

⚠ CAUTION

- **Do not substitute engine antifreeze coolant for windshield-washer fluid. This may result in damage to the paint.**
- **Do not fill the windshield-washer fluid reservoir with washer fluid concentrates at full strength. Some methyl alcohol based washer fluid concentrates may permanently stain the grille if spilled while filling the windshield-washer fluid reservoir.**
- **Pre-mix washer fluid concentrates with water to the manufacturer's recommended levels before pouring the fluid into the windshield-washer fluid reservoir. Do not use the windshield-washer fluid reservoir to mix the washer fluid concentrate and water.**

BATTERY

Caution symbols for battery			⚠ WARNING
①		No smoking, No exposed flames, No Sparks	Do not expose the battery to electrical sparks, flames or smoking. Hydrogen gas generated by the battery is explosive. Explosive gases can cause blindness or injury.
②		Shield eyes	Handle the battery cautiously. Always wear eye protection glasses to protect against explosion or battery acid.
③		Keep away from children	Never allow children to handle the battery. Keep the battery out of the reach of children.
④		Battery acid	Do not allow battery fluid to contact your skin, eyes, fabrics, or painted surfaces. Sulfuric acid can cause blindness or severe burns. After touching a battery or battery cap, do not touch or rub your eyes. Thoroughly wash your hands. If the acid contacts your eyes, skin or clothing, immediately flush with water for at least 15 minutes and seek medical attention. Battery fluid is acid. If the battery fluid gets into your eyes or onto your skin, it could cause loss of your eyesight or burns.
⑤		Note operating instructions	Before handling the battery, read this instruction carefully to ensure correct and safe handling.
⑥		Explosive gas	Hydrogen gas generated by battery fluid is explosive. Explosive gases can cause blindness or injury.

- If the battery is labeled "do not open" it is maintenance free and battery fluid should not be checked. It is recommended that you visit a NISSAN dealer or a qualified specialist workshop to confirm the battery's performance.
- Keep the battery surface clean and dry. Clean the battery with a solution of baking soda and water.
- Make certain the terminal connections are clean and securely tightened.
- If the vehicle is not to be used for 30 days or longer, disconnect the negative (-) battery terminal cable to prevent discharge.

NOTE:

Care should be taken to avoid situations that can lead to potential battery discharge and potential no-start conditions such as:

1. **Installation or extended use of electronic accessories that consume battery power when the engine is not running (Phone chargers, GPS, DVD players, etc.)**
2. **Vehicle is not driven regularly and/or only driven short distances.**

In these cases, the battery may need to be charged to maintain battery health.

⚠WARNING

- **Do not expose the battery to flames, an electrical spark or a cigarette. Hydrogen gas generated by the battery is explosive. Explosive gases can cause blindness or injury. Do not allow battery fluid to contact your skin, eyes, fabrics or painted surfaces. Sulfuric acid can cause blindness or injury. After touching a battery or battery cap, do not touch or rub your eyes. Thoroughly wash your hands. If the acid contacts your eyes, skin or clothing, immediately flush with water for at least 15 minutes and seek medical attention.**
- **When working on or near a battery, always wear suitable eye protection and remove all jewelry.**
- **Battery posts, terminals and related accessories contain lead and lead compounds. Wash hands after handling.**
- **Keep battery out of the reach of children.**
- **Do not tip the battery.**

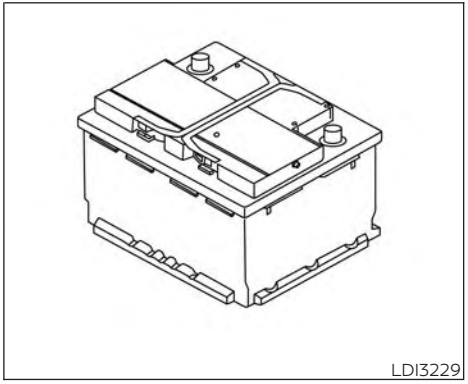
LDI3229

NOTE:

Do not try to open the top of the battery.

This battery is not equipped with removable vent caps.

JUMP STARTING

If jump starting is necessary, see "Jump starting" (P. 6-16). If the engine does not start by jump starting, the battery may have to be replaced. It is recommended that you visit a NISSAN dealer for this service.

VARIABLE VOLTAGE CONTROL SYSTEM

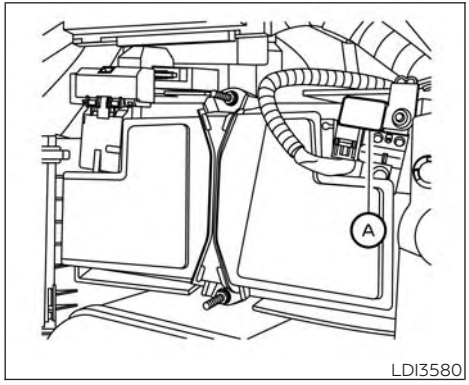

LDI3580

⚠CAUTION

- **Do not ground accessories directly to the battery terminal. Doing so will bypass the variable voltage control system and the vehicle battery may not charge completely.**
- **Use electrical accessories with the engine running to avoid discharging the vehicle battery.**

NOTE:

If the battery is completely drained the transmission will not manually shift to other positions.

Your vehicle is equipped with a variable voltage control system. This system measures the amount of electrical discharge from the battery and controls voltage generated by the generator.

The current sensor Ⓐ is located near the battery along the negative battery cable. If you add electrical accessories to your vehicle, be sure to ground them to a suitable body ground such as the frame or engine block area.

DRIVE BELT

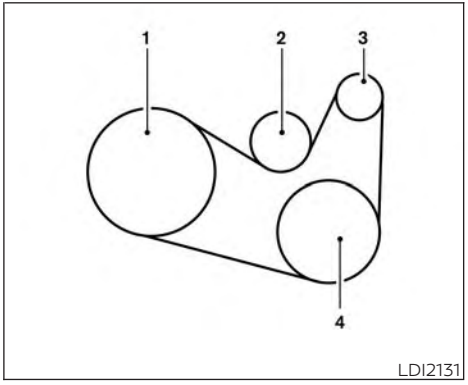

LDI2131

3.5L 6 cylinder (VQ35DD engine model)

1. Crankshaft pulley
2. Drive belt automatic tensioner pulley
3. Generator pulley
4. Air conditioner compressor pulley

⚠WARNING

Be sure the ignition switch is placed in the OFF or LOCK position before servicing drive belt. The engine could rotate unexpectedly.

1. Visually inspect the belt for signs of unusual wear, cuts, fraying or looseness. If the belt is in poor condition or is loose, have it replaced or adjusted. It is recommended that you visit a NISSAN dealer for this service.
2. Have the belt checked regularly for condition.

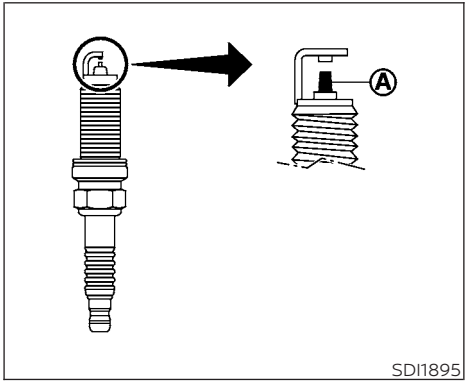

REPLACING SPARK PLUGS

Iridium-tipped spark plugs

It is not necessary to replace iridium-tipped Ⓐ spark plugs as frequently as conventional type spark plugs because they last much longer. Follow the maintenance log shown in a separate maintenance booklet. Do not service iridium-tipped spark plugs by cleaning or regapping.

- **Always replace spark plugs with recommended or equivalent ones.**

⚠WARNING

Be sure the engine and ignition switch are off and that the parking brake is engaged securely.

⚠CAUTION

Be sure to use the correct socket to remove the spark plugs. An incorrect socket can damage the spark plugs.

If replacement is required, it is recommended that you visit a NISSAN dealer for this service.

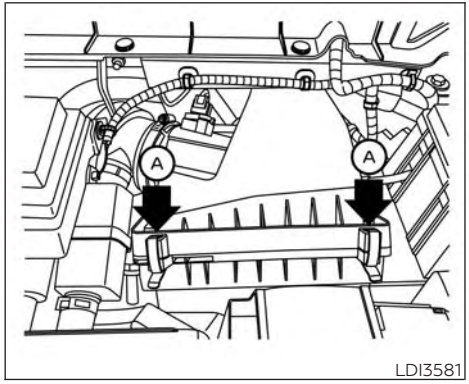

LDI3581

⚠WARNING

- **Operating the engine with the air cleaner filter off can cause you or others to be burned. The air cleaner filter not only cleans the intake air, it also stops the flame if the engine backfires. If the air cleaner is not installed and the engine backfires, you could be burned. Never drive with the air cleaner filter off. Be cautious working on the engine when the air cleaner is off.**
- **Never pour fuel into the throttle body or attempt to start the engine with the air cleaner removed. Doing so could result in serious injury.**

To remove the filter from the air cleaner, push the tabs Ⓐ and pull the cover upward.

The dry paper type filter element may be cleaned and reused. Replace the air filter according to the maintenance log shown in a separate maintenance booklet.

When replacing the air filter, wipe the inside of the air cleaner housing and the cover with a damp cloth.

NOTE:
After installing a new air cleaner, make sure the air cleaner cover is seated in the housing and latch the clips Ⓐ.

AIR CONDITIONER FILTER

The air conditioner filter restricts the entry of airborne dust and pollen particles and reduces some objectionable outside odors. The filter is located behind the glove box. For additional information, refer to a separate maintenance booklet for change intervals.

If replacement is required, it is recommended that you visit a NISSAN dealer for this service.

CLEANING

If your windshield is not clear after using the windshield-washer or if a wiper blade chatters when running, wax or other material may be on the blade or windshield.

Clean the outside of the windshield with a washer solution or a mild detergent. Your windshield is clean if beads do not form when rinsing with clear water.

Clean each blade by wiping it with a cloth soaked in a washer solution or a mild detergent. Then rinse the blades with clear water. If your windshield is still not clear after cleaning the blades and using the wiper, replace the blades.

⚠CAUTION

Worn windshield wiper blades can damage the windshield and impair driver vision.

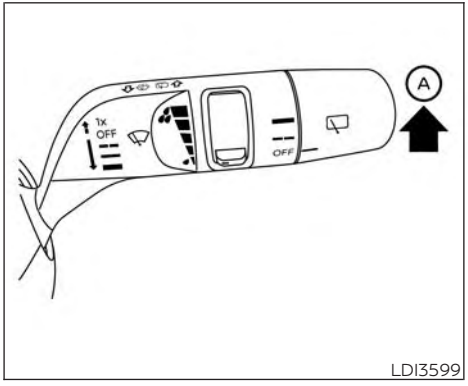

LDI3599

REPLACING

Replace the wiper blades if they are worn.

To replace the windshield wiper blades, follow the procedure below:

1. When the ignition switch is ON or within 60 seconds after placing the ignition switch from the ON to OFF position, place the windshield wiper and washer lever into the OFF position.
2. Rapidly lift the windshield wiper and washer lever Ⓐ upwards twice within 0.5 seconds. This action will cause the wipers to automatically take the service position.

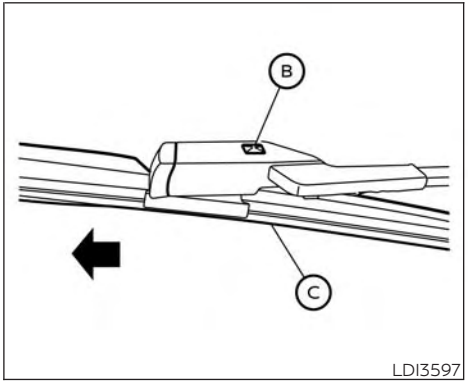

LDI3597

3. Once the wipers are in the service position, push the release tab Ⓑ.
4. Move the wiper blade Ⓒ up and remove.
5. Insert the new wiper blade onto the wiper arm until it clicks into place.

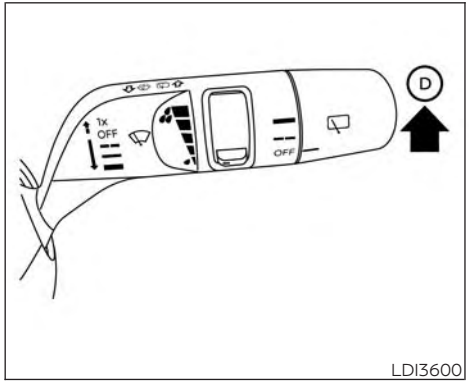

LDI3600

6. Finally, lift the windshield wiper and washer lever to the mist position Ⓓ once and release. This action will cause the wipers to resume the set position.

⚠CAUTION

- **After wiper blade replacement, return the wiper arm to its original position; otherwise it may be damaged when the hood is opened.**
- **Make sure the wiper blades contact the glass; otherwise the arms may be damaged from wind pressure.**

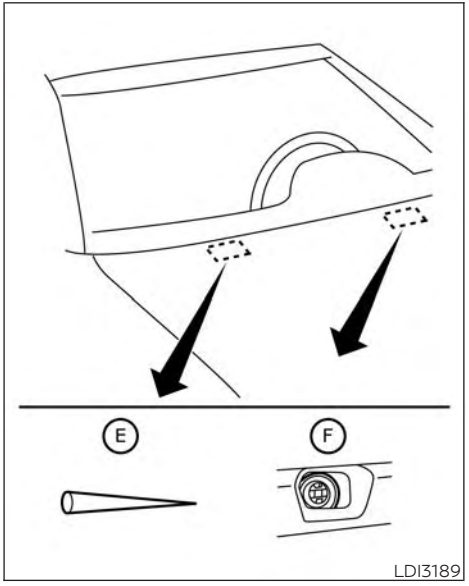

LDI3189

If you wax the surface of the hood, be careful not to let wax get into the washer nozzle Ⓕ. This may cause clogging or improper windshield-washer operation. If wax gets into the nozzle, remove it with a needle or small pin Ⓔ.

Rear window wiper blade

If checking or replacement is required, it is recommended that you visit a NISSAN dealer for this service.

If the brakes do not operate properly have the brakes checked. It is recommended that you visit a NISSAN dealer for this service.

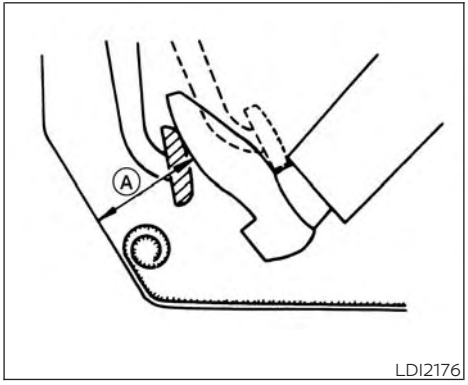

CHECKING BRAKE PEDAL

With the engine running, check the distance Ⓐ between the upper surface of the pedal and the metal floor. If it is out of the range shown, it is recommended that you visit a NISSAN dealer for this service.

Distance A: Under depression force of 490 N (110 lbs.)

90mm (3 1/2 in) or more

Self-adjusting brakes

Your vehicle is equipped with self-adjusting brakes.

The front and rear disc-type brakes self-adjust every time the brake pedal is applied.

⚠WARNING

Have your brake system checked if the brake pedal height does not return to normal. It is recommended that you visit a NISSAN dealer for this service.

Brake pad wear indicators

The disc brake pads on your vehicle have audible wear indicators. When a brake pad requires replacement, a high pitched scraping or screeching sound will be heard when the vehicle is in motion. The noise will be heard whether or not the brake pedal is depressed. Have the brakes checked as soon as possible if the wear indicator sound is heard.

Under some driving or climate conditions, occasional brake squeak, squeal or other noise may be heard. Occasional brake noise during light to moderate stops is normal and does not affect the function or performance of the brake system.

Proper brake inspection intervals should be followed. For additional information regarding brake inspections, refer to the appropriate maintenance schedule information in a separate maintenance booklet.

BRAKE BOOSTER

Check the brake booster function as follows:

1. With the engine off, press and release the brake pedal several times. When brake pedal movement (distance of travel) remains the same from one pedal application to the next, continue on to the next step.
2. While depressing the brake pedal, start the engine. The pedal height should drop a little.
3. With the brake pedal depressed, stop the engine. Keep the pedal depressed for about 30 seconds. The pedal height should not change.
4. Run the engine for one minute without depressing the brake pedal, then turn it off. Depress the brake pedal several times. The pedal travel distance will decrease gradually with each depression as the vacuum is released from the booster.

If the brakes do not operate properly, have the brakes checked. It is recommended that you visit a NISSAN dealer for this service.

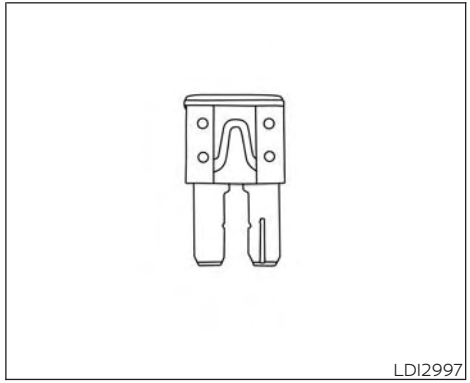
LDI2997

If any electrical equipment does not operate, check for an open fuse.

Fuses are used in the passenger and engine compartment. Spare fuses are provided and can be found in the passenger compartment fuse box.

When installing a fuse make sure the fuse is installed in the fuse box securely.

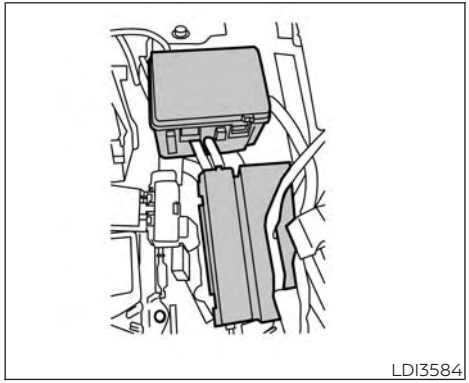
LDI3584

ENGINE COMPARTMENT

⚠ WARNING

Never use a fuse of higher or lower amperage rating than that specified on the fuse box cover. This could damage the electrical system or electronic control units or cause a fire.

If any electrical equipment does not come on, check for an open fuse.

1. Be sure the ignition switch and the headlight switch are OFF.
2. Open the engine hood.
3. Remove the fuse box cover by pushing the tab and lifting the cover up.
4. Remove the fuse with the fuse puller. The fuse puller is located in the fuse block in the passenger compartment.

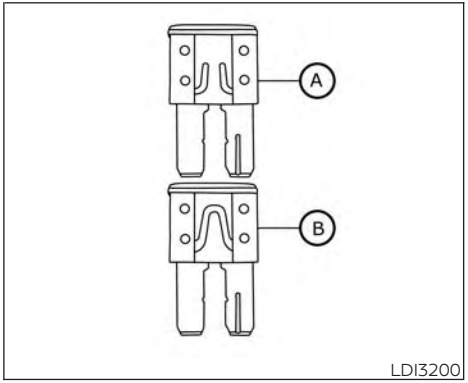

LDI3200

5. If the fuse is open Ⓐ, replace it with a new fuse Ⓑ.
6. If a new fuse also opens, have the electrical system checked and repaired. It is recommended that you visit a NISSAN dealer for this service.

Fusible links

If the electrical equipment does not operate and fuses are in good condition, check the fusible links. If any of these fusible links are melted, replace with only Genuine NISSAN parts.

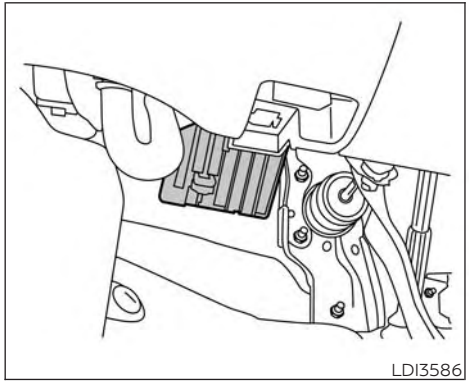
LDI3586

PASSENGER COMPARTMENT

⚠ WARNING

Never use a fuse of higher or lower amperage rating than that specified on the fuse box diagram. This could damage the electrical system or electronic control units or cause a fire.

If any electrical equipment does not operate, check for an open fuse.

1. Be sure the ignition switch and the headlight switch are OFF.
2. Remove the fuse with the fuse puller.

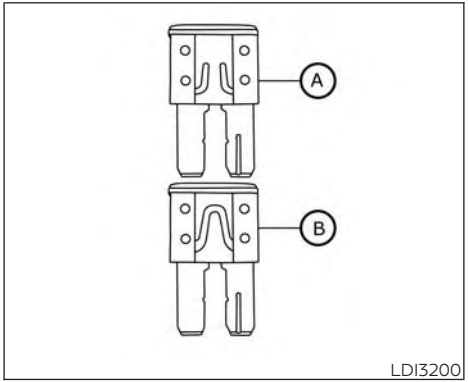

LDI3200

3. If the fuse is open Ⓐ, replace it with an equivalent good fuse Ⓑ.
4. If a new fuse also opens, have the electrical system checked and repaired. It is recommended that you visit a NISSAN dealer for this service.

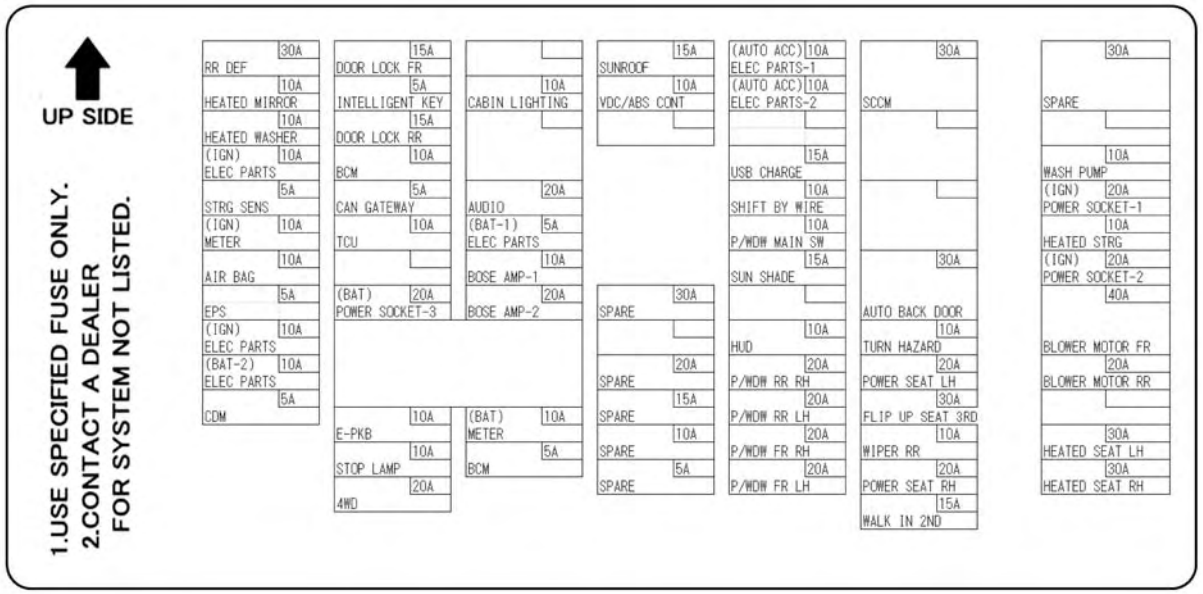
UP SIDE
1.USE SPECIFIED FUSE ONLY.
2.CONTACT A DEALER FOR SYSTEM NOT LISTED.
30A RR DEF
10A HEATED MIRROR
10A HEATED WASHER
(IGN) 10A ELEC PARTS
5A STRG SENS
(IGN) 10A METER
10A AIR BAG
5A EPS
(IGN) 10A ELEC PARTS
(BAT-2) 10A ELEC PARTS
5A CDM
15A DOOR LOCK FR
5A INTELLIGENT KEY
15A DOOR LOCK RR
10A BCM
5A CAN GATEWAY
10A TCU
(BAT) 20A POWER SOCKET-3
10A E-PKB
10A STOP LAMP
20A 4WD
10A CABIN LIGHTING
20A AUDIO
(BAT-1) 5A ELEC PARTS
10A BOSE AMP-1
20A BOSE AMP-2
(BAT) 10A METER
5A BCM
15A SUNROOF
10A VDC/ABS CONT
30A SPARE
20A SPARE
15A SPARE
10A SPARE
5A SPARE
(AUTO ACC) 10A ELEC PARTS-1
(AUTO ACC) 10A ELEC PARTS-2
15A USB CHARGE
10A SHIFT BY WIRE
10A P/WDW MAIN SW
15A SUN SHADE
10A HUD
20A P/WDW RR RH
20A P/WDW RR LH
20A P/WDW FR RH
20A P/WDW FR LH
30A SCCM
30A AUTO BACK DOOR
10A TURN HAZARD
20A POWER SEAT LH
30A FLIP UP SEAT 3RD
10A WIPER RR
20A POWER SEAT RH
15A WALK IN 2ND
30A SPARE
10A WASH PUMP
(IGN) 20A POWER SOCKET-1
10A HEATED STRG
(IGN) 20A POWER SOCKET-2
40A BLOWER MOTOR FR
20A BLOWER MOTOR RR
30A HEATED SEAT LH
30A HEATED SEAT RH

LDI3613

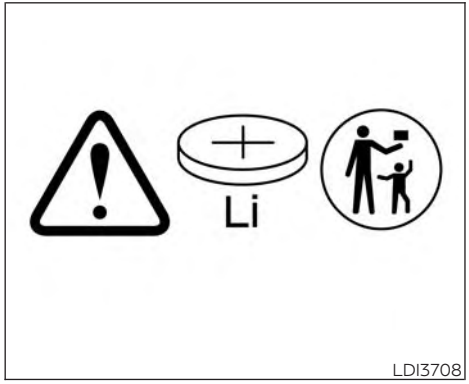

LDI3708

⚠ WARNING

- **Button/Coin Batteries are Hazardous (new or used). Keep away from Children.**
- **Button/Coin Cell Batteries can cause severe or fatal injuries in 2 hours or less if they are swallowed or placed inside any part of the body.**
- **If you suspect your child has swallowed or inserted a button/coin cell battery, call the 24–hour Poisons Information Centre in Australia on 131126 or in New Zealand on 0800 764 766 or contact your countries emergency department.**

⚠ CAUTION

Be careful not to allow children to swallow the battery or removed parts.

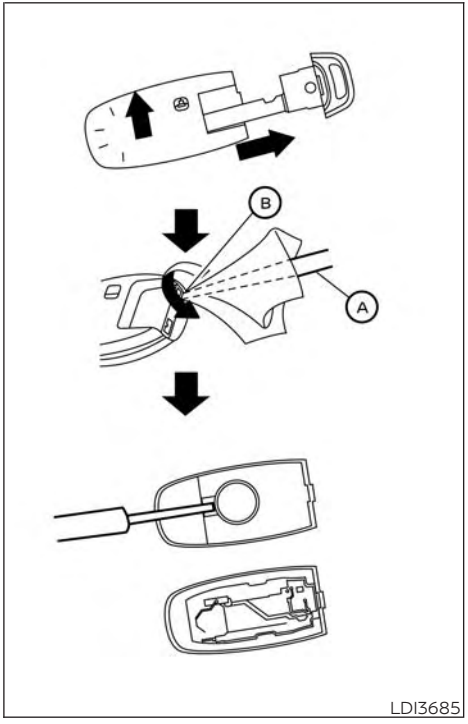

LDI3685

NISSAN INTELLIGENT KEY®

Replace the battery in the Intelligent Key as follows:

1. Remove the mechanical key from the Intelligent Key.
2. Insert a small flathead screwdriver Ⓐ into the slit Ⓑ of the corner and twist it to separate the upper part from the lower part. Place a cloth over the screwdriver to protect the casing.

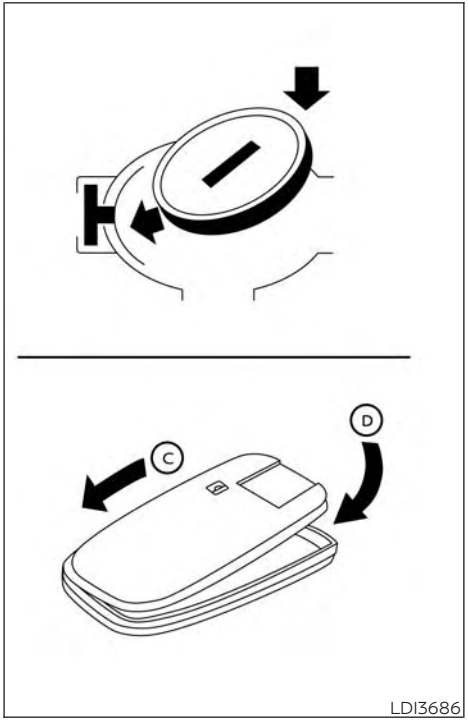

3. Replace the battery with a new one.

   Recommended battery: CR2032 or equivalent.

   - Do not touch the internal circuit and electric terminals as doing so could cause a malfunction.
   - Hold the battery by the edges. Holding the battery across the contact points will seriously deplete the storage capacity.
   - Make sure that the + side faces the bottom of the lower part.
4. Close the lid securely as illustrated with Ⓒ and Ⓓ.
5. Operate the buttons to check the operation.

If you need assistance with replacement, it is recommended that you visit a NISSAN dealer for this service.

Low power radio frequency devices:

- **Manufacturer: Continental AG**
- **Country of origin: Germany**
- **Carrier frequency: 433.92 MHz**
- **Rated supply voltage and power source: 3V lithium battery**

This device complies with SASO 1322/1997 "Low Power Radio Frequency Devices".

Operation is subject to the following two conditions: (1) This device may not cause harmful interference, and (2) any interference received by the device must be accepted.

Any change or modification in the device which may cause the device to operate outside the permitted limits of this standard could void the user's authority to operate the equipment.

The concerned authorities have the right to inspect the device and in case of complaints of harmful interference caused by the device, it shall be liable to be forfeited.

FCC Notice:

For USA:
This device complies with Part 15 of the FCC Rules. Operation is subject to the following two conditions: (1) This device may not cause harmful interference, and (2) this device must accept any interference received, including interference that may cause undesired operation.

Note:

Changes or modifications not expressly approved by the party responsible for compliance could void the user's authority to operate the equipment.

For Canada:
This device contains licence-exempt transmitter(s)/receiver(s) that comply with Innovation, Science and Economic Development Canada's licence-exempt RSS(s). Operation is subject to the following two conditions: (1) This device may not cause interference. (2) This device must accept any interference, including interference that may cause undesired operation of the device.

HEADLIGHTS

For additional information on headlight bulb replacement, refer to the instructions outlined in this section.

Replacing the LED headlight bulb

If LED headlight bulb replacement is required, it is recommended that you visit a NISSAN dealer for this service.

FOG LIGHTS (if so equipped)

For additional information on fog light bulb replacement, refer to the instructions outlined in this section.

Replacing the LED fog light bulb

If LED fog light bulb replacement is required, it is recommended that you visit a NISSAN dealer for this service.

EXTERIOR AND INTERIOR LIGHTS

Item	Wattage (W)	Bulb No.
Headlight assembly (type A) (if so equipped)*		
High	—	—
Low	—	—
Park/ Daytime running	—	—
Turn	21	WY21W
Side marker	—	—
Headlight assembly (type B) (if so equipped)*		
High	—	—
Low	—	—
Park/ Daytime running	—	—
Turn	21	WY21W
Side marker (if so equipped)	—	—
Front fog lights (if so equipped)*	—	—
Door mirror turn signal*	—	—
Map light*	8	—
Footwell light (if so equipped)*	—	—
Personal lights*	8	—
Vanity mirror light*	5	—
Cargo light*	8	—
Cargo door light*	5	—
High-mounted stop light*	—	—
Rear combination light*		
Stop/Tail	—	—
Turn	21	WY21W
Side marker (if so equipped)	5	W5W
Backup (reversing) assembly*		
Tail	—	—
Backup	16	W16W
License plate light*	—	—
Rear fog lights (if so equipped)*	—	—

* It is recommended that you visit a NISSAN dealer for replacement.

Always check with the Parts Department at a NISSAN dealer for the latest parts information.

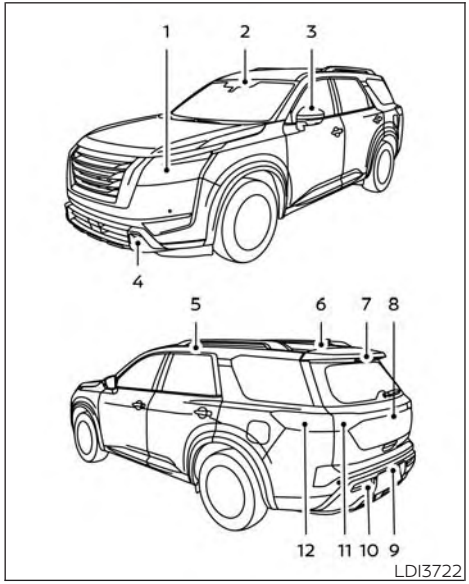

1. Headlight assembly
2. Map light
3. Door mirror turn signal
4. Front fog light (if so equipped)
5. Personal light
6. Cargo light
7. High-mounted stop light
8. Cargo door light
9. License plate light
10. Rear fog light (if so equipped)
11. Backup (reversing) assembly
12. Rear combination light

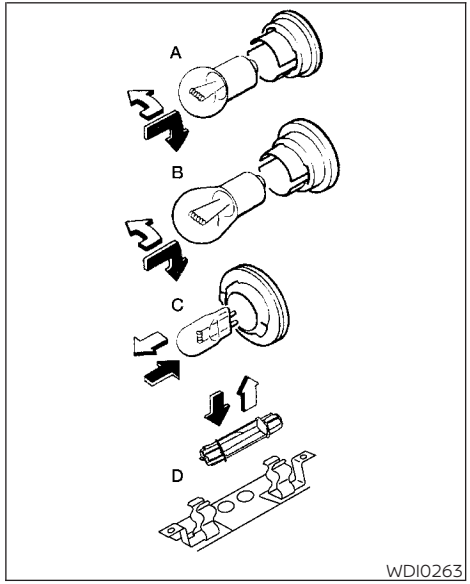

Replacement procedures

All other lights are either type A, B, C or D. When replacing a bulb, first remove the lens, lamp and/or cover.

⇧ Indicates bulb removal

⬆ Indicates bulb installation

If you have a flat tire, see "Flat tire" (P. 6-3).

TIRE PRESSURE

Tire Pressure Monitoring System (TPMS) (if so equipped)

⚠ WARNING

Radio waves could adversely affect electric medical equipment. Those who use a pacemaker should contact the electric medical equipment manufacturer for the possible influences before use.

This vehicle is equipped with the Tire Pressure Monitoring System (TPMS). It monitors tire pressure of all tires except the spare. When the low tire pressure warning light is lit and the "Tyre Pressure Low - Add Air" warning appears in the vehicle information display, one or more of your tires is significantly under-inflated. If equipped, the system also displays pressure of all tires (except the spare tire) on the display screen by sending a signal from a sensor that is installed in each wheel.

The TPMS will activate only when the vehicle is driven at speeds above 25 km/h (16 mph). Also, this system may not detect a sudden drop in tire pressure (for example a flat tire while driving).

For additional information, see "Low tire pressure warning light" (P. 2-19), "Tire Pressure Monitoring System (TPMS)" (P. 5-7) and "Flat tire" (P. 6-3).

Tire inflation pressure

Check the tire pressures (including the spare) often and always prior to long distance trips. The recommended tire pressure specifications are shown on the tire placard under the "Cold Tire Inflation Pressure" heading. The tire placard is affixed to the driver side center pillar. Tire pressures should be checked regularly because:

- Most tires naturally lose air over time.
- Tires can lose air suddenly when driven over potholes or other objects or if the vehicle strikes a curb while parking.

The tire pressures should be checked when the tires are cold. The tires are considered COLD after the vehicle has been parked for 3 or more hours or driven less than 1.6 km (1 mile) at moderate speeds.

The TPMS with Easy-Fill Alert (if so equipped) provides visual and audible signals outside the vehicle for inflating the tires to the recommended COLD tire pressure. For additional information, see "TPMS with Easy-Fill Tire Alert" (P. 5-10).

Incorrect tire pressure, including under inflation, may adversely affect tire life and vehicle handling.

⚠ WARNING

- **Improperly inflated tires can fail suddenly and cause an accident.**
- **The vehicle weight capacity is indicated on the certification label. Do not load your vehicle beyond this capacity. Overloading your vehicle may result in reduced tire life, unsafe operating conditions due to premature tire failure, or unfavorable handling characteristics and could also lead to a serious accident. Loading beyond the specified capacity may also result in failure of other vehicle components.**
- **Before taking a long trip, or whenever you heavily load your vehicle, use a tire pressure gauge to ensure that the tire pressures are at the specified level.**

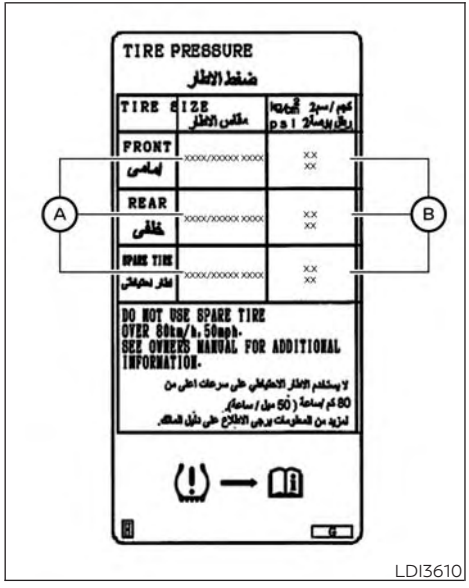

Tire placard

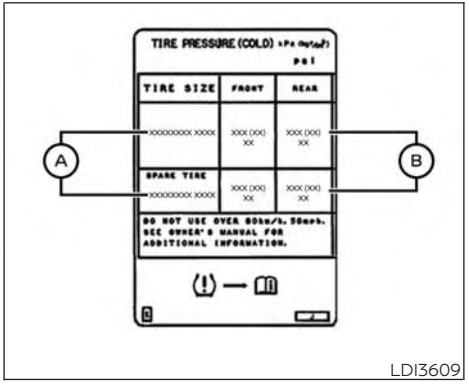

Ⓐ Tire size: The size of the tires originally installed on the vehicle at the factory.

Ⓑ Tire pressure: Inflate the tires to this pressure when the tires are cold. Tires are considered COLD after the vehicle has been parked for 3 or more hours, or driven less than 1.6 km (1 mile) at moderate speeds. The recommended cold tire inflation is set by the manufacturer to provide the best balance of tire wear and vehicle handling characteristics based on the vehicle's GVWR.

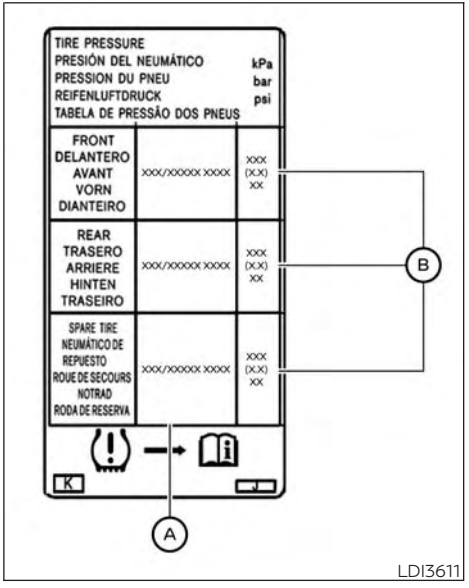

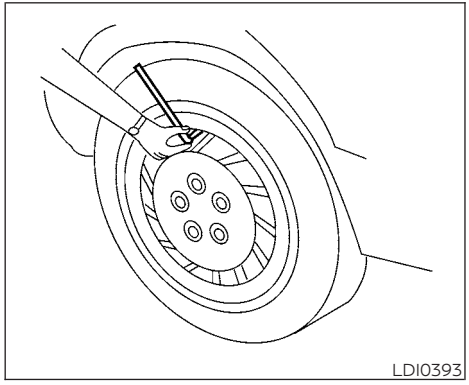
LDI0393

Checking tire pressure

⚠WARNING

- **Driving at high speeds, 160 km/h (100 mph) or higher sustained where it is legal to do so, can cause tires to have excessive heat build up, which may result in a tire failure causing loss of control, crash, injuries or even death. Some high-speed rated tires require inflation pressure adjustment for high-speed operation. When speed limits and road conditions allow vehicle driving at high speeds, make sure tires are rated to support high speed operation, tires are in optimal conditions and pressure is adjusted to correct cold inflation pressure for high speed operation.**
- **If your vehicle is equipped with 255/50R20 tire sizes, tires require adjustment to the inflation pressure when driving the vehicle at speeds of 160 km/h (100 mph) or higher where it is legal to do so. See recommended tire inflation chart for correct operating pressure.**
- **After vehicle high speed operation has ended, readjust the tire pressure to the recommended cold inflation pressure. For additional information, see "Checking tire pressure" (P. 8-37).**

1. Remove the valve stem cap from the tire.
2. Press the pressure gauge squarely onto the valve stem. Do not press too hard or force the valve stem sideways, or air will escape. If the hissing sound of air escaping from the tire is heard while checking the pressure, reposition the gauge to eliminate this leakage.
3. Remove the gauge.
4. Read the tire pressure on the gauge stem and compare to the specification shown on the tire placard.
5. Add air to the tire as needed. If too much air is added, press the core of the valve stem briefly with the tip of the gauge stem to release pressure. Recheck the pressure and add or release air as needed.
6. Install the valve stem cap.
7. Check the pressure of all other tires, including the spare.
8. Check the pressure when driving the vehicle at speeds of 160 km/h (100 mph) or higher where it is legal to do so.

Size	Cold Tire Inflation Pressure		
	kPa	bar/ kgf/ cm^2/ kg/cm^2	psi
Front and Rear Original Tire: 255/ 50R20	240	2.4	35 psi
Front and Rear Original Tire: 255/ 60R18	230	2.3	33 psi
Spare Tire: T165/ 90D18	420	4.2	60 psi

Recommended tire inflation pressures at speeds of 160 km/h (100 mph) or higher where it is legal to do so.

Size	Cold Tire Inflation Pressure		
	kPa	bar/ kgf/ cm^2/ kg/cm^2	psi
Front and Rear Original Tire: 255/ 50R20	250	2.5	36 psi

TYPES OF TIRES

⚠WARNING

- **When changing or replacing tires, be sure all four tires are of the same type (i.e., Summer, All Season or Snow) and construction. A NISSAN dealer may be able to help you with information about tire type, size, speed rating and availability.**
- **Replacement tires may have a lower speed rating than the factory equipped tires, and may not match the potential maximum vehicle speed. Never exceed the maximum speed rating of the tire.**
- **Replacing tires with those not originally specified by NISSAN could affect the proper operation of the low tire pressure warning system.**
- **Always use tires of the same type, size, brand, construction and tread pattern on all four wheels. Failure to do so may result in a circumference difference between tires on the front and rear axles which can cause the Vehicle Dynamic Control (VDC)**

or Electronic Stability Program (ESP) system to malfunction resulting in personal injury or death, excessive tire wear and may damage the transmission, transfer case and differential gears.

All season tires

NISSAN specifies All Season tires on some models to provide good performance all year, including snowy and icy road conditions. All Season tires are identified by ALL SEASON and/or M&S on the tire sidewall. Snow tires have better snow traction than All Season tires and may be more appropriate in some areas.

Summer tires

NISSAN specifies summer tires on some models to provide superior performance on dry roads. Summer tire performance is substantially reduced in snow and ice. Summer tires do not have the tire traction rating "M&S" on the tire sidewall.

If you plan to operate your vehicle in snowy or icy conditions, NISSAN recommends the use of SNOW tires or ALL SEASON tires on all four wheels.

Snow tires

If snow tires are needed, it is necessary to select tires equivalent in size and load rating to the original equipment tires. If you do not, it can adversely affect the safety and handling of your vehicle.

Generally, snow tires have lower speed ratings than factory equipped tires and may not match the potential maximum vehicle speed. Never exceed the maximum speed rating of the tire.

If you install snow tires, they must be the same size, brand, construction and tread pattern on all four wheels.

For additional traction on icy roads, studded tires may be used. However, some U.S. states and Canadian provinces prohibit their use. Check local, state and provincial laws before installing studded tires. Skid and traction capabilities of studded snow tires on wet or dry surfaces may be poorer than that of non-studded snow tires.

TIRE CHAINS

Use of tire chains may be prohibited according to location. Check the local laws before installing tire chains. When installing tire chains, make sure they are the proper size for the tires on your vehicle and are installed according to the chain manufacturer's suggestions. **Use only SAE class "S" chains.** Class "S" chains are used on vehicles with restricted tire to vehicle clearance. Vehicles that can use Class "S" chains are designed to meet the minimum clearances between the tire and the closest vehicle suspension or body component required to accommodate the use of a winter traction device (tire chains or cables). The minimum clearances are determined using the factory equipped tire size. Other types may damage your vehicle. Use chain tensioners when recommended by the tire chain manufacturer to ensure a tight fit. Loose end links of the tire chain must be secured or removed to prevent the possibility of whipping action damage to the fenders or underbody. If possible, avoid fully loading your vehicle when using tire chains. In addition, drive at a reduced speed. Otherwise, your vehicle may be damaged and/or vehicle handling and performance may be adversely affected.

Do not use tire chains on dry roads. Driving with chains in such conditions can cause damage to the various mechanisms of the vehicle due to some overstress.

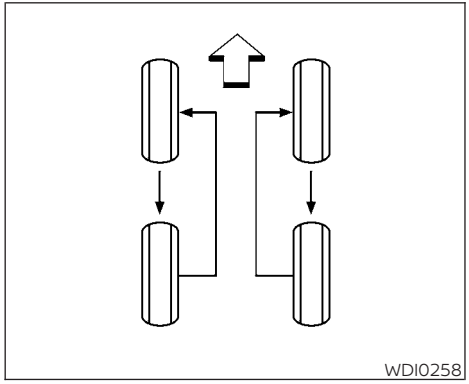
WDI0258

CHANGING WHEELS AND TIRES

Tire rotation

NISSAN recommends rotating the tires every 10,000 km (6,000 miles) for 2WD vehicles and 5,000 km (3,000 miles) for 4WD vehicles.

For additional information on tire replacing procedures, see "Flat tire" (P. 6-3).

As soon as possible, tighten the wheel nuts to the specified torque with a torque wrench.

Wheel nut tightening torque:
113 N·m (83 ft-lb)

The wheel nuts must be kept tightened to specifications at all times. It is recommended that wheel nuts be tightened to specification at each tire rotation interval.

⚠ WARNING

- **After rotating the tires, check and adjust the tire pressure.**
- **Retighten the wheel nuts when the vehicle has been driven for 1,000 km (600 miles) (also in cases of a flat tire, etc.).**
- **Do not include the spare tire in the tire rotation.**

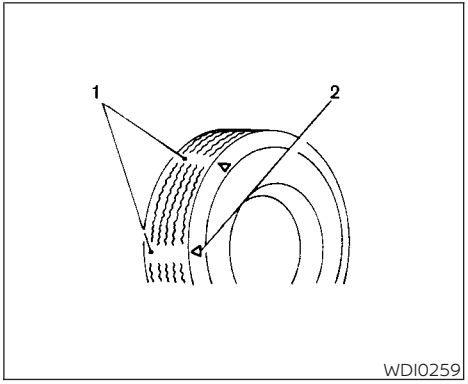

WDI0259

Tire wear and damage

1. Wear indicator
2. Location mark

⚠ WARNING

- **Tires should be periodically inspected for wear, cracking, bulging or objects caught in the tread. If excessive wear, cracks, bulging or deep cuts are found, the tire(s) should be replaced.**

- **The original tires have built-in tread wear indicators. When the wear indicators are visible, the tire(s) should be replaced.**
- **Tires degrade with age and use. Have tires, including the spare, over 6 years old checked by a qualified technician because some tire damage may not be obvious. Replace the tires as necessary to prevent tire failure and possible personal injury.**
- **Improper service of the spare tire may result in serious personal injury. If it is necessary to repair the spare tire, it is recommended that you visit a NISSAN dealer for this service.**

Replacing wheels and tires

When replacing a tire, use the same size, tread design, speed rating and load carrying capacity as originally equipped. For additional information, see "Wheels and tires" (P. 9-9).

⚠WARNING

- **The use of tires other than those recommended or the mixed use of tires of different brands, construction (bias, bias-belted or radial), or tread patterns can adversely affect the ride, braking, handling, Vehicle Dynamic Control (VDC) or Electronic Stability Program (ESP) system, ground clearance, body-to-tire clearance, tire chain clearance, speedometer calibration, headlight aim and bumper height. Some of these effects may lead to accidents and could result in serious personal injury.**
- **For 2WD models, if your vehicle was originally equipped with four tires that were the same size and you are only replacing two of the four tires, install the new tires on the rear axle. Placing new tires on the front axle may cause loss of vehicle control in some driving conditions and cause an accident and personal injury.**
- **If the wheels are changed for any reason, always replace with wheels which have the same off-set dimension. Wheels of a different off-set could cause premature tire wear, degrade vehicle handling characteristics, affect the VDC or ESP system and/or interference with the brake discs. Such interference can lead to decreased braking efficiency and/or early brake pad wear. For additional information on wheel off-set dimensions, see "Wheels and tires" (P. 9-9).**
- **When using a wheel without the TPMS such as the spare tire, the TPMS will not function and the low tire pressure warning light will flash for approximately 1 minute. The light will remain on after 1 minute. Have your tires replaced and/or TPMS system reset as soon as possible. It is recommended that you visit a NISSAN dealer for this service.**
- **Replacing tires with those not originally specified by NISSAN could affect the proper operation of the TPMS.**

- **The TPMS sensor may be damaged if it is not handled correctly. Be careful when handling the TPMS sensor.**
- **When replacing the TPMS sensor, the ID registration may be required. It is recommended that you visit a NISSAN dealer for ID registration.**
- **Do not use a valve stem cap that is not specified by NISSAN. The valve stem cap may become stuck.**
- **Be sure that the valve stem caps are correctly fitted. Otherwise the valve may be clogged up with dirt and cause a malfunction or loss of pressure.**
- **Do not install a damaged or deformed wheel or tire even if it has been repaired. Such wheels or tires could have structural damage and could fail without warning.**
- **The use of retread tires is not recommended.**

4x4 Four-wheel drive models

⚠ CAUTION

- **Always use tires of the same size, brand, construction (bias, bias-belted or radial), and tread pattern on all four wheels. Failure to do so may result in a circumference difference between tires on the front and rear axles which will cause excessive tire wear and may damage the transmission and the drivetrain parts.**
- **Only use spare tires specified for each 4WD model.**

If excessive tire wear is found, it is recommended that all four tires be replaced with tires of the same size, brand, construction and tread pattern. The tire pressure and wheel alignment should also be checked and corrected as necessary. It is recommended you visit a NISSAN dealer for this service.

Wheel balance

Unbalanced wheels may affect vehicle handling and tire life. Even with regular use, wheels can get out of balance. Therefore, they should be balanced as required.

Wheel balance service should be performed with the wheels off the vehicle. Spin balancing the wheels on the vehicle could lead to mechanical damage.

Care of wheels

- Wash the wheels when washing the vehicle to maintain their appearance.
- Clean the inner side of the wheels when the wheel is changed or the underside of the vehicle is washed.
- Do not use abrasive cleaners when washing the wheels.
- Inspect wheel rims regularly for dents or corrosion. Such damage may cause loss of pressure or poor seal at the tire bead.
- NISSAN recommends waxing the road wheels to protect against road salt in areas where it is used during winter.

Spare tire (TEMPORARY USE ONLY spare tire)

When using a wheel without the TPMS such as the spare tire, the TPMS will not function.

Observe the following precautions if the TEMPORARY USE ONLY spare tire must be used. Otherwise, your vehicle could be damaged or involved in an accident:

⚠ WARNING

- **The spare tire should be used for emergency use only. It should be replaced with the standard tire at the first opportunity to avoid possible tire or differential damage.**
- **Drive carefully while the TEMPORARY USE ONLY spare tire is installed. Avoid sharp turns and abrupt braking while driving.**
- **Periodically check spare tire inflation pressure. Always keep the pressure of the TEMPORARY USE ONLY spare tire at 420 kPa, 4.2 bar (60 psi).**
- **With the TEMPORARY USE ONLY spare tire installed do not drive the vehicle at speeds faster than 80 km/h (50 mph).**
- **When driving on roads covered with snow or ice, the TEMPORARY USE ONLY spare tire should be used on the rear wheels and the original tire used on the front wheels (drive wheels).**
- **Tire tread of the TEMPORARY USE ONLY spare tire will wear at a faster rate than the standard tire. Replace the spare tire as soon as the tread wear indicators appear.**
- **Do not use the spare tire on other vehicles.**
- **Do not use more than one spare tire at the same time.**
- **Do not tow a trailer when the TEMPORARY USE ONLY spare tire is installed.**

⚠ CAUTION

- **Do not use tire chains on a TEMPORARY USE ONLY spare tire. Tire chains will not fit properly and may cause damage to the vehicle.**
- **Because the TEMPORARY USE ONLY spare tire is smaller than the original tire, ground clearance is reduced. To avoid damage to the vehicle, do not drive over obstacles. Also, do not drive the vehicle through an automatic car wash since it may get caught.**

MEMO

9 Technical and consumer information

Recommended fluids/lubricants and capacities 9-2
- Fuel information 9-5
- Recommended SAE viscosity number 9-6
- Air conditioner system refrigerant and oil recommendations 9-6

Specifications 9-7
- Engine 9-7
- Wheels and tires 9-9
- Dimensions and weights 9-9

When traveling or registering in another country 9-10

Vehicle identification 9-10
- Vehicle identification label (if so equipped) 9-10
- Vehicle Identification Number (VIN) plate 9-11
- Vehicle identification number (chassis number) 9-11
- Engine serial number 9-12
- Certification label (if so equipped) 9-12
- Tire placard 9-12
- Air conditioner specification label 9-13

Installing front license plate 9-14

Vehicle loading information 9-14
- Terms 9-15
- Vehicle load capacity 9-15
- Securing the load 9-17
- Loading tips 9-18
- Measurement of weights 9-18

Uniform tire quality grading 9-18

Radio approval number and information 9-19

Airbag label (where fitted) 9-23

RECOMMENDED FLUIDS/ LUBRICANTS AND CAPACITIES

The following are approximate capacities. The actual refill capacities may be slightly different. When refilling, follow the procedure described in the "Maintenance and do-it-yourself" section to determine the proper refill capacity.

Fluid Type		Capacity (approximate)			Recommended Fluids/Lubricants
		Metric Measure	US Measure	Imperial Measure	
Fuel		70 L	18-1/2 gal	15-3/8 gal	• For additional information, see "Fuel information" (P. 9-5).
Engine oil* Drain and refill * For additional information, see "Engine oil" (P. 8-11).	With oil filter change	4.8 L	5-1/8 qt	4-1/4 qt	**For New Zealand** • Genuine "NISSAN Motor Oil 0W-20 SP" is recommended. • If the above motor oil is not available, use "NISSAN Motor Oil" or equivalent that matches the following grade and viscosity. • Oil grade: – API SN or SP, ILSAC GF-5 or GF-6 – ACEA A3/B3, A3/B4 or A5/B5 • SAE Viscosity: For additional information, see "Recommended SAE viscosity number" (P. 9-6). **Except for New Zealand** • Genuine "NISSAN Motor Oil 0W-20 SP" is recommended. • If the above motor oil is not available, use "NISSAN Motor Oil" or equivalent that matches the following grade and viscosity. • Oil grade: API SN or SP, ILSAC GF-5 or GF-6 • SAE Viscosity: For additional information, see "Recommended SAE viscosity number" (P. 9-6).
	Without oil filter change	4.5 L	4-3/4 qt	4 qt	
Engine coolant with reservoir	With tow package	11.9 L	3-1/8 gal	2-5/8 gal	• Genuine NISSAN Engine Coolant (blue) or equivalent. • Use Genuine NISSAN Engine Coolant or equivalent in its quality, in order to avoid possible aluminum corrosion within the engine cooling system caused by the use of non-genuine engine coolant. Note that any repairs for the incidents within the engine cooling system while using non-genuine engine coolant may not be covered by the warranty even if such incidents occurred during the warranty period.
	without tow package	11.6 L	3-1/8 gal	2-1/2 gal	

Fluid Type	Capacity (approximate)			Recommended Fluids/Lubricants
	Metric Measure	US Measure	Imperial Measure	
Automatic Transmission Fluid (ATF)	—	—	—	• Genuine NISSAN Matic R ATF • NISSAN recommends using Genuine NISSAN Matic R ATF ONLY in NISSAN automatic transmissions. Do not mix with other fluids. Using fluids that are not equivalent to Genuine NISSAN Matic R ATF may damage the automatic transmission. Damage caused by the use of fluids other than as recommended is not covered under the warranty.
Differential gear oil	—	—	—	• Genuine NISSAN Diff Oil Hypoid Super semi-synthetic GL-5 75W-90 • Use Genuine NISSAN Diff Oil Hypoid Super semi-synthetic GL-5 75W-90. Using differential gear oil other than Genuine NISSAN Diff Oil Hypoid Super semi-synthetic GL-5 75W-90 will damage the differential gear, which is not covered by the warranty.
Coupling oil	—	—	—	• Genuine NISSAN LSC Coupling Transmission Fluid 12-301 or equivalent
Transfer fluid	—	—	—	• Genuine NISSAN Differential Oil Hypoid Super-S GL-5 synthetic 75W-90 or equivalent.
Brake fluid	Refill to the proper level according to the instructions, see "Brake fluid" (P. 8-16)			**For Mexico** • Genuine NISSAN Brake Fluid or equivalent DOT 3 or DOT 4 • Never mix different types of fluids (DOT 3 and DOT 4) **Except for Mexico** • Genuine NISSAN Brake Fluid or equivalent DOT 3
Multi-purpose grease	—	—	—	• NLGI No. 2 (Lithium Soap base)

Fluid Type	Capacity (approximate)			Recommended Fluids/Lubricants
	Metric Measure	US Measure	Imperial Measure	
Windshield-washer fluid	4.2 L	1-1/8 gal	7/8 gal	• Genuine NISSAN Windshield Washer Concentrate Cleaner & Antifreeze fluid or equivalent
Air conditioning system refrigerant	—	—	—	**For Mexico** • HFO-1234yf (R-1234yf) • For additional information, see "Air conditioner system refrigerant and oil recommendations" (P. 9-6). **Except for Mexico** • HFC-134A (R-134a) • For additional information, see "Air conditioner system refrigerant and oil recommendations" (P. 9-6).
Air conditioning system oil	—	—	—	• Genuine NISSAN A/C System Oil Type PAG (VC100YF) or equivalent • For additional information, see "Air conditioner system refrigerant and oil recommendations" (P. 9-6).

FUEL INFORMATION

⚠CAUTION

Do not use leaded gasoline. Using leaded gasoline will damage the three-way catalyst.

For Mexico:

Use UNLEADED REGULAR gasoline with an octane rating of **at least 87** AKI (Anti-Knock Index) number (Research octane number **91**).

Except for Mexico:

Use UNLEADED REGULAR gasoline with an octane rating of **at least 91** (RON).

Gasoline specifications

NISSAN recommends using gasoline that meets the World-Wide Fuel Charter (WWFC) specifications where it is available. Many of the automobile manufacturers developed this specification to improve emission control system and vehicle performance. Ask your service station manager if the gasoline meets the WWFC specifications.

Reformulated gasoline

Some fuel suppliers are now producing reformulated gasolines. These gasolines are specially designed to reduce vehicle emissions. NISSAN supports efforts towards cleaner air and suggests that you use reformulated gasoline when available.

Aftermarket fuel additives

NISSAN does not recommend the use of any aftermarket fuel additives (for example, fuel injector cleaner, octane booster, intake valve deposit removers, etc.) which are sold commercially. Many of these additives intended for gum, varnish or deposit removal may contain active solvents or similar ingredients that can be harmful to the fuel system and engine.

Octane rating tips

Using unleaded gasoline with an octane rating lower than recommended can cause persistent, heavy "spark knock." ("Spark knock" is a metallic rapping noise.) If severe, this can lead to engine damage. If you detect a persistent heavy spark knock even when using gasoline of the stated octane rating, or if you hear steady spark knock while holding a steady speed on level roads, it is recommended that you have a NISSAN dealer correct the condition. Failure to correct the condition is misuse of the vehicle, for which NISSAN is not responsible.

Incorrect ignition timing may result in spark knock, after-run and/or overheating, which may cause excessive fuel consumption or engine damage. If any of the above symptoms are encountered, have your vehicle checked. It is recommended that you visit a NISSAN dealer for servicing.

However, now and then you may notice light spark knock for a short time while accelerating or driving up hills. This is not a cause for concern, because you get the greatest fuel benefit when there is light spark knock for a short time under heavy engine load.

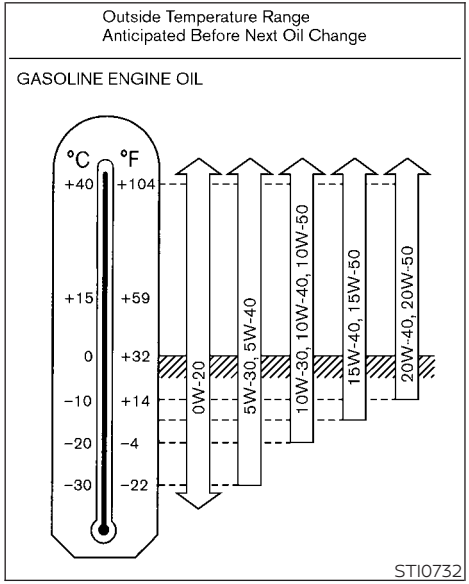

RECOMMENDED SAE VISCOSITY NUMBER

0W-20 is preferable.

If 0W-20 is not available, select the viscosity, from the chart, that is suitable for the outside temperature range.

AIR CONDITIONER SYSTEM REFRIGERANT AND OIL RECOMMENDATIONS

The air conditioner system in your NISSAN vehicle must be charged with the refrigerant HFO-1234yf (R-1234yf) (for Mexico) or HFC-134a (R-134a) (except for Mexico) and NISSAN A/C system oil Type PAG (VC100YF) or the exact equivalents.

⚠ CAUTION

The use of any other refrigerant or oil may cause severe damage to the air conditioning system and will require the replacement of all air conditioner system components.

The refrigerant HFO-1234yf (R-1234yf) (for Mexico) or HFC-134a (R-134a) (except for Mexico) in your NISSAN vehicle does not harm the earth's ozone layer. Although this refrigerant does not affect the earth's atmosphere, certain government regulations require the recovery and recycling of any refrigerant during automotive air conditioner system service. A NISSAN dealer has the trained technicians and equipment needed to recover and recycle your air conditioner system refrigerant.

HFO-1234yf (R-1234yf) (for Mexico)

Air conditioner system should only be serviced by trained and certified technicians to ensure proper and safe operation (SAE J2845). Only new and SAE J2842 certified evaporator(s) shall be used as replacement parts.

A damaged or leaking air conditioning evaporator shall never be repaired or replaced with one removed from a used or salvaged vehicle. To replace a damaged or leaking evaporator, use only new and SAE J2842 certified evaporator(s). It is recommended that you visit a NISSAN dealer when servicing your air conditioner system.

SPECIFICATIONS

ENGINE

Model		3.5L 6 cylinder (VQ35DD engine model)
Type		Gasoline, 4-cycle, DOHC
Cylinder arrangement		6-cylinder, V-block, Slanted at 60°
Bore x Stroke		
	Metric measure	96 mm x 81 mm
	US measure	3.760 in x 3.189 in
Displacement		
	Metric measure	3,498 cm^3
	US measure	213.45 cu in
Firing order		1–2–3–4–5–6
Idle speed A/T N (Neutral) Ignition timing (degree B.T.D.C. at idle speed) CO % at idle		No adjustment is necessary.
Spark plug		FXE22HR-11
Spark plug gap (Nominal)	Metric measure	1.1 mm
	US measure	0.043 in
Camshaft operation		Timing chain

Technical Characteristics (for Gulf standard models)

Model		3.5L 6 cylinder (VQ35DD engine model)
Maximum net power	kW (rpm)	248 (6,400)
Maximum net torque	N·m (rpm)	351 (4,800)
Maximum vehicle speed *	km/h (mph)	190 (118)

*: Gulf Standard regulation requires automobile manufacturers to indicate the maximum vehicle speed for applicable models. The maximum vehicle speed, listed above, is the measured speed under certain testing conditions. The actual value may differ according to the vehicle usage and road and environmental conditions. NISSAN recommends that you ALWAYS observe posted speed limits and never drive too fast for conditions.

WHEELS AND TIRES

Wheel type	Offset Metric Measure	Offset US Measure	Size
Alloy	50 mm	1.97 in	18 x 8J
Alloy	50 mm	1.97 in	20 x 8J
T-type (spare)	25 mm	0.98 in	18 x 4T
Tire size			255/60R18
			255/50R20
Spare tire			
Temporary spare			T165/90D18

DIMENSIONS AND WEIGHTS

	Metric Measure	US Measure
Overall length	5,004 mm	197 in
Overall width	1,978 mm	77.8 in
Overall height	1,800 mm	70.8 in
Front and Rear track width	1,700 mm	66.9 in
Wheelbase	2,900 mm	114.2 in
Gross vehicle weight rating	2,750 kg	6,063 lbs.
Gross axle weight rating		
Front	1,335 kg	2,943 lbs.
Rear	1,530 kg	3,373 lbs.

WHEN TRAVELING OR REGISTERING IN ANOTHER COUNTRY

When planning to drive your NISSAN vehicle in another country, you should first find out if the fuel available is suitable for your vehicle's engine.

Using fuel with an octane rating that is too low may cause engine damage. All gasoline vehicles must be operated with unleaded gasoline. Therefore, avoid taking your vehicle to areas where appropriate fuel is not available.

When transferring the registration of your vehicle to another country, state, province or district, it may be necessary to modify the vehicle to meet local laws and regulations.

The laws and regulations for motor vehicle emission control and safety standards vary according to the country, state, province or district; therefore, vehicle specifications may differ.

When any vehicle is to be taken into another country, state, province or district and registered, its modifications, transportation and registration are the responsibility of the user. NISSAN is not responsible for any inconvenience that may result.

VEHICLE IDENTIFICATION

It is prohibited to cover, paint, weld, cut, drill, alter or remove the Vehicle Identification Number (VIN).

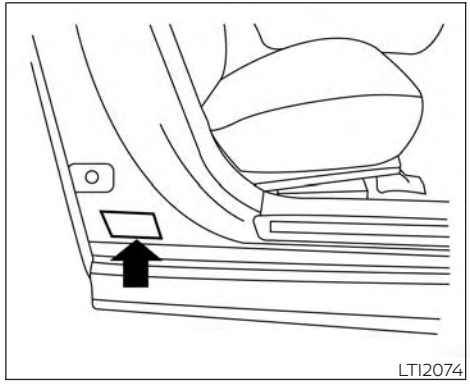
LTI2074

VEHICLE IDENTIFICATION LABEL (if so equipped)

The vehicle identification label is affixed as illustrated.

Build date (if so equipped)

Build date is stamped on the vehicle identification label.

The build date means the calendar month and the year in which the body shell and power train subassemblies are conjoined and the vehicle is driven or moved from the production line.

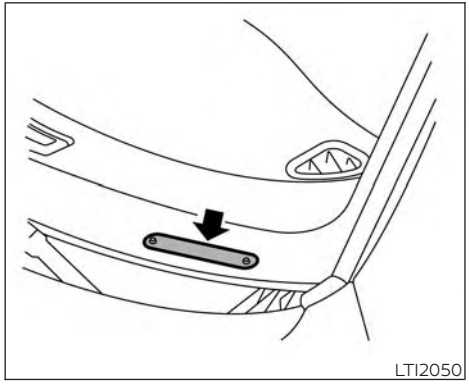
LTI2050

VEHICLE IDENTIFICATION NUMBER (VIN) PLATE

The VIN plate is located as shown. This number is the identification for your vehicle and is used in the vehicle registration.

The VIN number is also available through the center display screen. For additional information, refer to the separate NissanConnect® Owner's Manual.

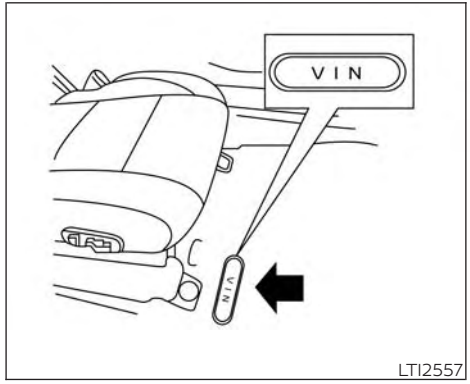

LTI2557

Type A (if so equipped)

VEHICLE IDENTIFICATION NUMBER (chassis number)

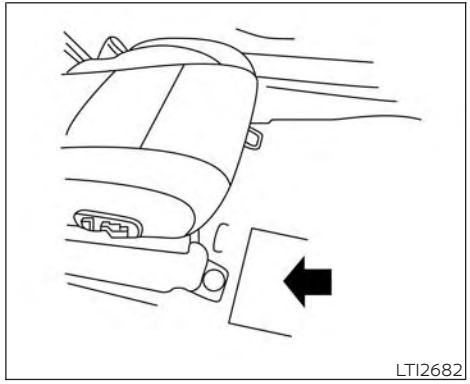
LTI2682

Type B (if so equipped)

The vehicle identification number is located as shown.

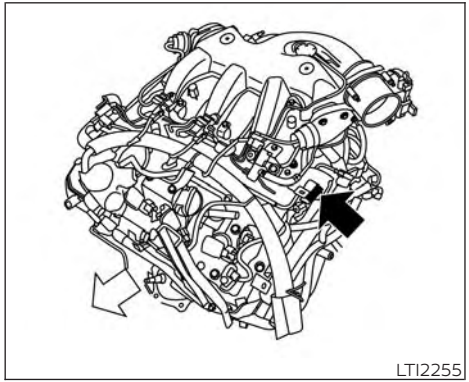

ENGINE SERIAL NUMBER

The number is stamped on the engine as shown.

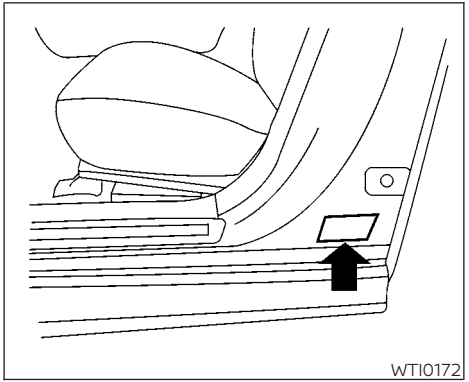

CERTIFICATION LABEL (if so equipped)

The certification label is affixed as shown. This label contains valuable vehicle information, such as: month and year of manufacture and the Vehicle Identification Number (VIN). Review it carefully.

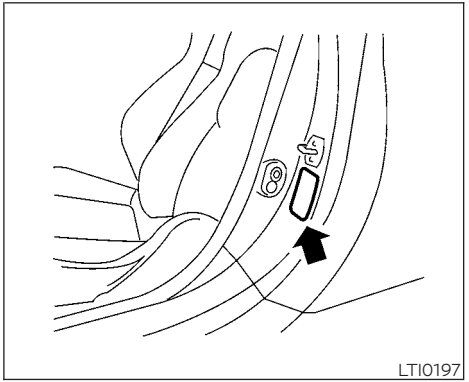

TIRE PLACARD

The cold tire pressure is shown on the tire placard. The tire placard is located as shown.

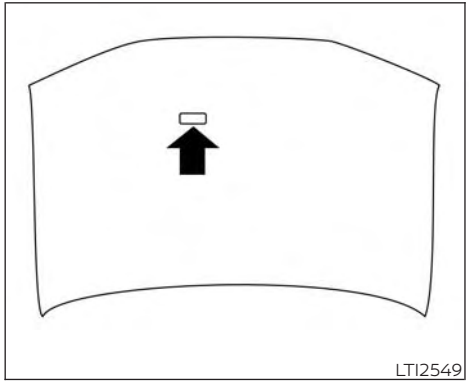

AIR CONDITIONER SPECIFICATION LABEL

The air conditioner specification label is affixed to the underside of the hood as shown.

Symbol Name	Reference	Graphic
Caution	ISO 7000 0434	
Air Conditioning System (MAC)	ISO 2575 D01	
MAC System Lubricant Type (PAG–POE)		
Requires Registered Technician to Service MAC System		
Flammable Refrigerant		

Air Conditioner Specification Label Symbols (if so equipped)

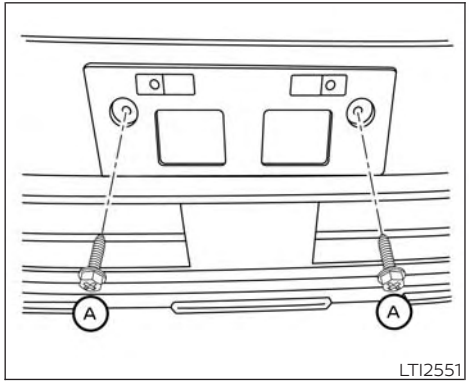

Type A (if so equipped)

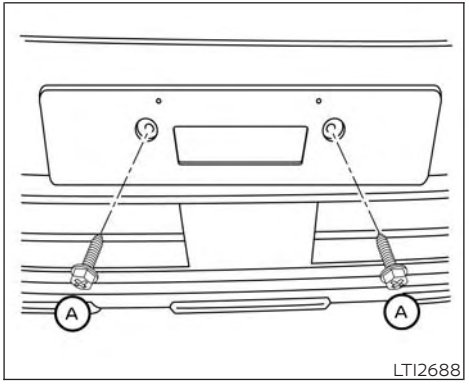

Type B (if so equipped)

To mount the front license plate, attach the license plate bracket to the bumper fascia at the location marks (small dimples) using the two provided screws Ⓐ .

⚠WARNING

- **It is extremely dangerous to ride in a cargo area inside a vehicle. In a collision, people riding in these areas are more likely to be seriously injured or killed.**
- **Do not allow people to ride in any area of your vehicle that is not equipped with seats and seat belts.**
- **Be sure everyone in your vehicle is in a seat and using a seat belt properly.**

TERMS

It is important to familiarize yourself with the following terms before loading your vehicle:

- Curb Weight (actual weight of your vehicle) - vehicle weight including: standard and optional equipment, fluids, emergency tools, and spare tire assembly. This weight **does not** include passengers and cargo.
- GVW (Gross Vehicle Weight) - curb weight plus the combined weight of passengers and cargo.
- GVWR (Gross Vehicle Weight Rating) - The maximum total combined weight of the vehicle, passengers, cargo and any other optional equipment.
- GAWR (Gross Axle Weight Rating) - maximum weight (load) limit specified for the front or rear axle.
- GCWR (Gross Combined Weight Rating) - The maximum total combined weight of the vehicle, passengers, cargo and the trailer.
- Vehicle Capacity Weight, Load limit, Total load capacity - maximum total weight limit specified of the load (passengers and cargo) for the vehicle. This is the maximum combined weight of occupants and cargo that can be loaded into the vehicle.
- Cargo capacity - permissible weight of cargo, the subtracted weight of occupants from the load limit.

VEHICLE LOAD CAPACITY

Before driving a loaded vehicle, confirm that you do not exceed the Gross Vehicle Weight Rating (GVWR) or the Gross Axle Weight Rating (GAWR) for your vehicle.

To get "the combined weight of occupants and cargo", add the weight of all occupants, then add the total luggage weight, as shown in the following illustration.

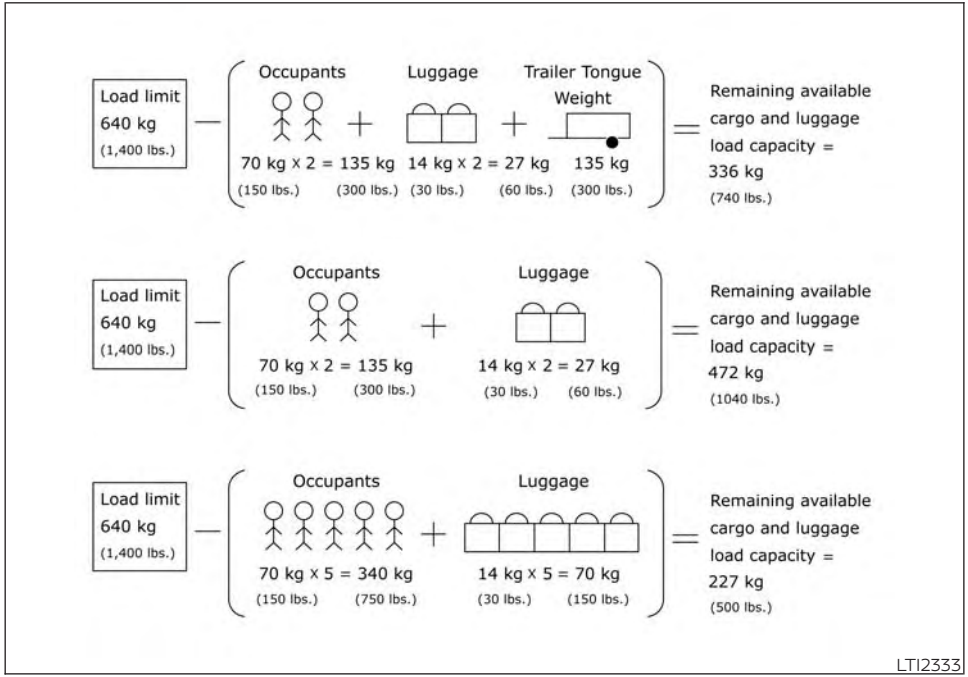

Example

Steps for determining correct load limit

1. Obtain the vehicle load capacity. For additional information, see "Vehicle load capacity" (P. 9-15).
2. Determine the combined weight of the driver and passengers that will be riding in your vehicle.
3. Subtract the combined weight of the driver and passengers from vehicle load weight capacity.
4. The resulting figure equals the available amount of cargo and luggage load capacity. For example, if the XXX amount equals 635 kg (1,400 lbs.) and there will be five 68 kg (150 lbs.) passengers in your vehicle, the amount of available cargo and luggage load capacity is 295 kg (650 lbs.). or (635-340 (5 X 68) = 295 kg.) (1,400-750 (5 X 150) = 650 lbs.)
5. Determine the combined weight of luggage and cargo being loaded on the vehicle. That weight may not safely exceed the available cargo and luggage load capacity calculated in step 4.

Before driving a loaded vehicle, confirm that you do not exceed the Gross Vehicle Weight Rating (GVWR) or the Gross Axle Weight Rating (GAWR) for your vehicle. For additional information, see "Measurement of weights" (P. 9-18).

Also check tires for proper inflation pressures. For additional information, see "Tire placard" (P. 8-36).

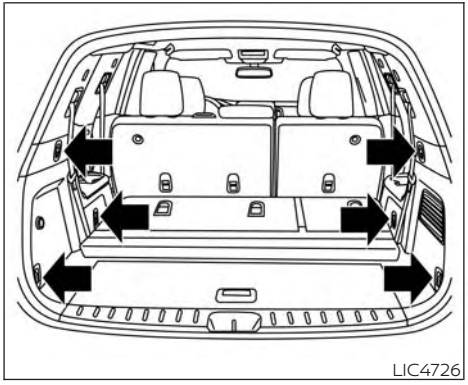

Cargo area luggage hooks

SECURING THE LOAD

There are luggage/cargo hooks located in the cargo area as shown. The hooks can be used to secure cargo with ropes or other types of straps.

When securing items using luggage hooks located on the upper side finisher do not apply a load over more than 29 N (6.5 lbs.) to a single hook.

The cargo hooks that are located closer to the floor should have loads less than 490 N (110 lbs.) to a single hook.

⚠WARNING

- **Properly secure all cargo with ropes or straps to help prevent it from sliding or shifting. Do not place cargo higher than the seatbacks. In a sudden stop or collision, unsecured cargo could cause personal injury.**
- **The child restraint top tether strap may be damaged by contact with items in the cargo area. Secure any items in the cargo area. Your child could be seriously injured or killed in a collision if the top tether strap is damaged.**
- **Do not load your vehicle any heavier than the GVWR or the maximum front and rear GAWRs. If you do, parts of your vehicle can break, tire damage could occur, or it can change the way your vehicle handles. This could result in loss of control and cause personal injury.**

LOADING TIPS

- The GVW must not exceed GVWR or GAWR.
- Do not load the front and rear axle to the GAWR. Doing so will exceed the GVWR.

⚠ WARNING

- **Properly secure all cargo with ropes or straps to help prevent it from sliding or shifting. In a sudden stop or collision, unsecured cargo could cause personal injury.**
- **Do not load your vehicle any heavier than the GVWR or the maximum front and rear GAWRs. If you do, parts of your vehicle can break, tire damage could occur, or it can change the way your vehicle handles. This could result in loss of control and cause personal injury.**
- **Overloading not only can shorten the life of your vehicle and the tire, but can also cause unsafe vehicle handling and longer braking distances. This may cause a premature tire failure which could result in a serious accident and personal injury. Failures caused by overloading are not covered by the vehicle's warranty.**

MEASUREMENT OF WEIGHTS

Secure loose items to prevent weight shifts that could affect the balance of your vehicle. When the vehicle is loaded, drive to a scale and weigh the front and the rear wheels separately to determine axle loads. Individual axle loads should not exceed either of the Gross Axle Weight Ratings (GAWR). The total of the axle loads should not exceed the Gross Vehicle Weight Rating (GVWR). If weight ratings are exceeded, move or remove items to bring all weights below the ratings.

DOT (Department of Transportation) Quality Grades: All passenger car tires must conform to federal safety requirements in addition to these grades.

Quality grades can be found where applicable on the tire sidewall between tread shoulder and maximum section width. For example:

Treadwear 200 Traction AA Temperature A

Treadwear

The treadwear grade is a comparative rating based on the wear rate of the tire when tested under controlled conditions on a specified government test course. For example, a tire graded 150 would wear one and one-half (1 1/2) times as well on the government course as a tire graded 100. The relative performance of tires depends upon the actual conditions of their use, however, and may depart significantly from the norm due to variations in driving habits, service practices and differences in road characteristics and climate.

Traction AA, A, B and C

The traction grades, from highest to lowest, are AA, A, B, and C. Those grades represent the tire's ability to stop on wet pavement as measured under controlled conditions on specified government test surfaces of asphalt and concrete. A tire marked C may have poor traction performance.

⚠ WARNING

The traction grade assigned to this tire is based on straight-ahead braking traction tests, and does not include acceleration, cornering, hydroplaning, or peak traction characteristics.

Temperature A, B and C

The temperature grades are A (the highest), B, and C, representing the tire's resistance to the generation of heat, and its ability to dissipate heat when tested under controlled conditions on a specified indoor laboratory test wheel. Sustained high temperature can cause the material of the tire to degenerate and reduce tire life, and excessive temperature can lead to sudden tire failure. The grade C corresponds to a level of performance which all passenger car tires must meet under the Federal Motor Safety Standard No. 109. Grades B and A represent higher levels of performance on the laboratory test wheel than the minimum required by law.

⚠ WARNING

The temperature grade for this tire is established for a tire that is properly inflated and not overloaded. Excessive speed, under-inflation, or excessive loading, either separately or in combination, can cause heat build-up and possible tire failure.


LSD3128

For Australia

Homologation information on the link below:
http://continental-homologation.com/nissan

Homologation information on the link below:
http://continental-homologation.com/nissan



LSD3976

For United Arabian Emirates (AGCC), Abu Dhabi, Dubai, Sharjah, Ras al-Khaimah, Umm al-Qawain, Ajman and Fujairah

TXPZ1
TXPZ3
Continental Automotive GmbH
Siemensstrasse 12
93055 Regensburg
Germany



LTI2517

For Paraguay

For Mexico

IFETEL: RLVCOTI18–1981
or
IFT: RLVCOTI18–1981
Model name: TIS-09DL

Manufacturere and address: Continental Automotive GmbH, Siemensstrasse 12, 93055 Regensburg, Germany

La operación de este equipo está sujeta a las siguientes dos condiciones: (1) es posible que este equipo o dispositivo no cause interferencia perjudicial y (2) este equipo o dispositivo debe aceptar cualquier interferencia, incluyendo la que pueda causar su operación no deseada.

The operation of this equipment is subject to these two conditions:

1. this equipment or device does not cause harmful interference, and
2. this equipment must accept any interference, including any that may cause its malfunction.

For Jamaica

This product has been Type Approved by Jamaica: SMA – TIS-09DL



For Abu Dhabi, Dubai (Intelligent key system)

For Dominican Republic (Intelligent key system)

FCC ID: KR5TXPZ1

FCC ID: XXXXXXXX

This device complies with part 15 of the FCC Rules. Operation is subject to the following two conditions: (1) this device may not cause harmful interference, and (2) this device must accept any interference received, including interference that may cause undesired operation.

NOTE:

Changes or modifications not expressly approved by the party responsible for compliance could void the user's authority to operate the equipment.

This equipment complies with FCC radiation exposure limits set forth for portable use conditions.

For Mexico (Intelligent key system)

TXPZ1

TXPZ3

IFETEL: XXXXXXXXX-XXXX



For Abu Dhabi (Hands Free Module (HFM))

For Dominican Republic (Hands Free Module (HFM))

FCC ID: KR5HFM401

Warning Statement

Warning Statement for Intentional Radiator please download: further drawing information

For Mexico (Hands Free Module(HFM))

HFM401

Continental Automotive GmbH

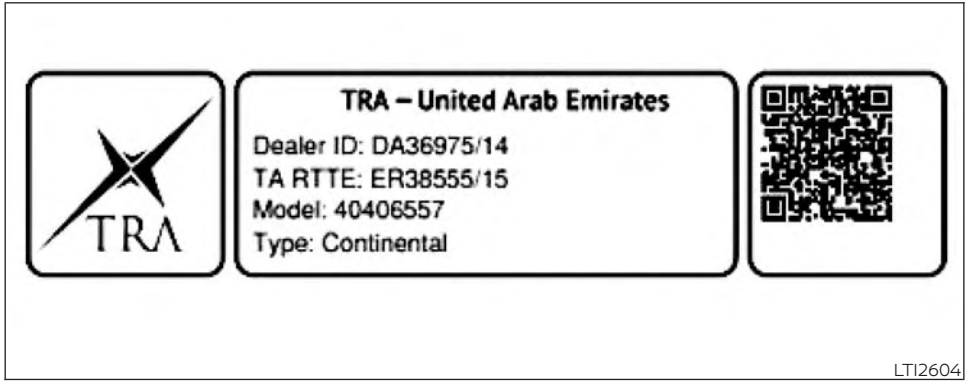

For Abu Dhabi, Dubai (Body Control Module (BCM))

For St. Martin

Le soussigné, Continental, déclare que l'équipement radioélectrique du type TIS-09DL est conforme à la directive 2014/53/EU. Le texte complet de la déclaration UE de conformité est disponible à l'adresse internet suivante:
https://continental-homologation.com/en-gl/Nissan
Bande de fréquences: 433.92 MHz
Puissance d'émission maximale: -17dBm

Hierbij verklaar ik, Continental, dat het type radioapparatuur TIS-09DL conform is met Richtlijn 2014/53/EU. De volledige tekst van de EU-conformiteitsverklaring kan worden geraadpleegd op het volgende internetadres:
https://continental-homologation.com/en-gl/Nissan
Frequentieband: 433.92 MHz
Maximaal zendvermogen: -17dBm

Hereby, Continental declares that the radio equipment type TIS-09DL is in compliance with Directive 2014/53/EU. The full text of the EU declaration of conformity is available at the following internet address:
https://continental-homologation.com/en-gl/Nissan
Frequency band: 433.92 MHz
Maximum transmitter power: -17dBm

AIRBAG LABEL (where fitted)



NEVER use a rearward facing child restraint on a seat protected by an ACTIVE AIRBAG in front of it, DEATH or SERIOUS INJURY to the CHILD can occur.

NE JAMAIS utiliser un dispositif de retenue pour enfant de type dos à la route sur un siège protégé par un AIRBAG ACTIVÉ placé devant lui. Cela peut entrainer la MORT de l'ENFANT ou des BLESSURES GRAVES.

Installieren Sie niemals ein entgegen der Fahrtrichtung angeordnetes Kinderrückhaltesystem auf einem Sitz mit aktiviertem Frontairbag. Es könnte zum Tod oder schweren Verletzungen des Kindes führen.

No instalar nunca los sistemas de retención para niños (sillitas de niño) de espaldas al sentido de la marcha en el asiento del pasajero protegido por un AIRBAG frontal ACTIVO. Esto puede provocar la MUERTE del niño o DAÑARLE SERIAMENTE.

«NON INSTALLARE MAI un seggiolino per bambini rivolto con verso opposto al senso di marcia su un sedile protetto da un AIRBAG frontale ATTIVO. In caso di incidente questo potrebbe risultare molto pericoloso per l'incolumità del bambino.»

Plaats nooit een kinderzitje achterstevoren op de passagiersstoel voorin als de airbags van de voorpassagier niet zijn uitgeschakeld. Dit kan ernstige of zelfs dodelijke verwondingen van het kind veroorzaken.

NUNCA utilize um sistema de retenção de criança virado para a traseira num banco protegido por um AIRBAG ACTIVO à sua frente, porque pode ocorrer MORTE ou FERIMENTOS GRAVES na CRIANÇA.

W żadnym przypadku NIE NALEŻY stosować fotelików dla dzieci skierowanych twarzą do tyłu przed siedzeniami chronionymi AKTYWNĄ PODUSZKĄ POWIETRZNĄ. Może to doprowadzić do POWAŻNYCH OBRAŻEŃ lub nawet ŚMIERCI DZIECKA.

NIKDY nepoužívejte dětskou sedačku směřující dozadu na sedadle s AKTIVNÍM čelním AIRBAGEM, mohlo by dojít k USMRCENÍ nebo VÁŽNÉMU ZRANĚNÍ DÍTĚTE.

Önünde AKTİF BİR HAVA YASTIĞI ile korunuran bir koltuğa hiç bir zaman yüzü geriye bakan bir çocuk koltuğu KOYMAYIN, bu ÇOCUĞUN ÖLÜMÜNE veya CİDDİ ŞEKİLDE YARALANMASINA neden olabilir.

Nu folosiți NICIODATĂ un scaun pentru copil cu spatele la direcția de deplasare pe un scaun protejat de un AIRBAG ACTIV amplasat în fața sa, deoarece există riscul de DECES sau RĂNIRE GRAVĂ a copilului.

SOHA ne használjon hátrafelé nézó gyermekülést olyan ülésen, amelyet elótól AKTÍV LÉGZSÁK véd, mert az a GYERMEK HALÁLÁT vagy SÚLYOS SÉRÜLÉSÉT okozhatja.

"ΑΠΑΓΟΡΕΥΕΤΑΙ η τοποθέτηση παιδικού καθίσματος, με την πλάτη προς το εμπρόσθιο μέρος του αυτοκινήτου, στο κάθισμα του συνοδηγού, επειδή μπροστά του υπάρχει ΕΝΕΡΓΟΣ ΜΕΤΩΠΙΚΟΣ ΑΕΡΟΣΑΚΟΣ. Μπορεί να επέλθει ΘΑΝΑΤΟΣ ή ΣΟΒΑΡΟΣ ΤΡΑΥΜΑΤΙΣΜΟΣ του ΠΑΙΔΙΟΥ".

Använd ALDRIG en bakåtvänd barnstol på ett säte som skyddas av en AKTIVERAD AIRBAG framför det; LIVSFARA eller risk för ALLVARLIGA SKADOR.

ÄLÄ KOSKAAN käytä kasvot taaksepäin suunnattua lastenistuinta istuimella, jossa on KÄYTÖSSÄ OLEVA TURVATYYNY. Seurauksena voi olla KUOLEMA tai LAPSEN VAKAVA LOUKKAANTUMINEN.

Brug ALDRIG et bagudvendt barnesæde på et sæde, der er beskyttet af en AKTIV AIRBAG foran det. Det kan resultere I DØD eller ALVORLIG PERSONSKADE på BARNET.

LTI2584



NEMOJTE upotrebljavati sjedalicu za djecu okrenutu prema natrag na sjedalu ispred kojega se nalazi zaštićeni AKTIVNI ZRAČNI JASTUK, može doći do SMRTONOSNIH ili OZBILJNIH OZLJEDA za DIJETE.

NIKOLI ne namestite otroškega sedeža, obrnjenega v nasprotni smeri smeri vožnje, v primeru VKLOPLJENE varnostne blazine. To lahko povzroči OTROKOVO SMRT ali HUDE TELESNE POŠKODBE.

Никогда не устанавливайте обращенное назад детское удерживающее сиденье на переднем пассажирском сиденье при неотключенной подушке безопасности. Это может привести к смерти ребенка или к тяжелым повреждениям.

NIKDY nepoužívajte detskú sedačku smerujúcu dozadu na sedadle s AKTÍVNYM čelným AIRBAGOM, mohlo by prísť k USMRTENIU alebo VÁŽNEMU ZRANENIU DIEŤAŤA.

NEIEVIETOJIET ar skatu pretōji braukšanas virzienam vērstu bērnu sēdekliti šajā sēdeklī, ja tā priekšā uzstādītais GAISA SPILVENS ir AKTIVIZĒTS, – tas BĒRNAM var radīt NOPIETNAS TRAUMAS vai pat izraisīt BĒRNA NĀVI.

ÄRGE kasutage seljaga sõidusuunas laste turvatooli istmel, mille ees on AKTIIVNE TURVAPADI. LAPS võib saada TÕSISE KEHAVIGASTUSE või HUKKUDA.

NIEKADA nevežkite vaikų prie automobilio sėdynės atvirkščiai judėjimo krypčiai pritvirtintoje specialioje kėdutėje, jeigu ši sėdynė apsaugota VEIKIANČIA SAUGOS PAGALVE, nes VAIKUI kyla MIRTINAS ar SUNKAUS SUŽEIDIMO pavojus.

Ніколи не встановлюйте дитяче крісло спинкою вперед на сидінні, передня ПОДУШКА БЕЗПЕКИ якого не заблокована. Ризик ЗАГИБЕЛІ або ТЯЖКИХ ТРАВМ дитини.

„Никога на използвайте детско столче за автомобил, монтирано с гръб към движението, на седалка оборудвана с предпазна въздушна възглавница пред нея. Съществува риск за живота или сериозно нараняване на детето!"

يحذر نهائيًا تثبيت مقعد الطفل بشكل عكسي على المقعد المحمي بوسادة هوائية نشطة أمام مقعد الطفل، فمن الممكن أن يتسبب ذلك في وفاة الطفل أو إصابته بجروح خطيرة

NUNCA utilize uma cadeirinha prototora para crianças voltada para a traseira em um assento que seja protegido por um AIRBAG ATIVO na frente do assento. Podem ocorrer MORTE ou FERIMENTOS GRAVES para a CRIANÇA.

هرگز از کمربند کودک رو به پشت در روبروی صندلی حفاظت شده توسط ACTIVE AIRBAG (کیسه هوای فعال) استفاده نکنید. این کار ممکن است باعث مرگ یا جراحت شدید در کودک شود.

절대로 능동형 에어백이 전면에 설치된 좌석에 후향식 어린이 보호시트를 사용하지 마십시오. 어린이에게 심각한 상해를 입히거나 사망에 이르게 할 수 있습니다.

前部に作動可能なエアバッグが装着されているシートに、後ろ向きのチャイルドシートを絶対に使用しないでください。お子様に死や大けがを招く恐れがあります。

禁止在座椅前部安全气囊激活的情况下，在该座椅上使用后向儿童安全座椅，可能造成儿童严重受伤甚至死亡。

LTI2585

10 Index

A

Aiming control, headlights 2-86
Air bag (See supplemental restraint system) 1-80
Air bag system
  Front (See supplemental front impact air bag system) 1-88
Air bag warning labels 1-101, 9-23
Air bag warning light 1-103, 2-16
Air bag warning light, supplemental 1-103, 2-16
Air cleaner 8-22
Air cleaner housing filter 8-22
Air conditioner
  Air conditioner operation 4-33
  Air conditioner specification label . . .9-13
  Air conditioner system refrigerant and oil recommendations 9-6
  Air conditioner system refrigerant recommendations 9-6
  Heater and air conditioner controls . .4-33
  Servicing air conditioner 4-39
Airbag label 9-23
Alarm system (See vehicle security system) 2-77
Anchor point locations 1-39, 1-73
Antenna 4-39
Anti-lock Braking System (ABS) 5-231
Antifreeze 5-243
Approach unlock function 3-18
Armrests 1-9
Autolight switch 2-84
Automatic
  Automatic power window switch . . .2-122
  Driving with automatic transmission .5-20
Automatic anti-glare inside mirror 3-38
Automatic brake hold 5-29
Automatic door locks 3-6

B

Battery 5-243, 8-18
  Charge warning light 2-15
Battery replacement 8-30
  Key fob 8-30
  NISSAN Intelligent Key® 8-30
Before starting the engine 5-18
Belt (See drive belt) 8-20
Blind Spot Warning (BSW) 5-64
Booster seats 1-75
Brake
  Anti-lock Braking System (ABS) 5-231
  Brake booster 8-26
  Brake fluid 8-16
  Brake light (See stop light) 8-33
  Brake pedal 8-25
  Brake system 5-230
  Brake warning light 2-14
  Brake wear indicators 2-23, 8-25
  Parking brake operation 5-27
  Self-adjusting brakes 8-25
Brake Assist 5-232
Brake fluid 8-16
Brake system 5-230
Brakes 8-25
Break-in schedule 5-222
Brightness control
  Instrument panel 2-90
Bulb check/instrument panel 2-14
Bulb replacement 8-33

C

Camera Aiding Parking Sensor (sonar) .4-22
Capacities and recommended fuel/lubricants 9-2
Car phone or CB radio 4-40
Cargo (See vehicle loading information) 9-14
Cargo area storage bin 2-118
Cargo light 2-127
Chassis control 5-235
Check tire pressure 2-44, 2-72
Child restraint with top tether strap 1-38, 1-73
Child restraints . . .1-29, 1-30, 1-31, 1-33, 1-53, 1-54, 1-62
  LATCH (Lower Anchors and Tethers for CHildren) System 1-33

Precautions on child restraints 1-42, 1-47, 1-54, 1-75
Top tether strap anchor point locations 1-39, 1-73
Child safety rear door lock 3-7
Cleaning exterior and interior 7-2, 7-4
Climate-controlled seat switches 2-92
Cold weather driving 5-243
Console box 2-114
Controls
Heater and air conditioner controls . . 4-33
Coolant
Capacities and recommended fuel/lubricants 9-2
Changing engine coolant 8-10
Checking engine coolant level 8-10
Engine coolant temperature gauge . . . 2-9
Corrosion protection 7-7
Cruise control 5-103
Cup holders 2-116

D

Daytime Running Light System . . . 2-89, 2-90
Dimensions and weights 9-9
Dimmer switch for instrument panel . . . 2-90
Door locks 3-5
Drive belt 8-20
Driving
Cold weather driving 5-243
Driving with automatic transmission . 5-20
Precautions when starting and driving . 5-6
Driving the vehicle 5-20
Dual panel moonroof 2-124

E

E-call (SOS) Button 2-102
Eco Drive Report 5-35
Economy - fuel 5-222
Emergency call (SOS) button 2-101
Emergency engine shutoff 5-17, 6-2
Emergency Lane Assist 5-54
Engine
Before starting the engine 5-18
Capacities and recommended fuel/lubricants 9-2
Changing engine coolant 8-10
Changing engine oil 8-12
Changing engine oil filter 8-12
Checking engine coolant level 8-10
Checking engine oil level 8-11
Engine coolant temperature gauge . . . 2-9
Engine cooling system 8-9
Engine oil 8-11
Engine oil pressure warning light . . . 2-15
Engine serial number 9-12
Engine specifications 9-7
Starting the engine 5-18
Engine coolant temperature gauge . . . 2-9
Exhaust gas (Carbon monoxide) 5-6
Explanation of maintenance items 8-2
Extended storage switch 2-110
Eyeglass case 2-115

F

Flashers (See hazard warning flasher switch) 6-2
Flat tire 6-3, 6-4
Floor mat positioning aid 7-6
Fluid
Brake fluid 8-16
Capacities and recommended fuel/lubricants 9-2
Engine coolant 8-9
Engine oil 8-11
Windshield-washer fluid 8-16
Fog light switch 2-91
Front air bag system (See supplemental restraint system) 1-88
Front and rear sonar system 5-237
Front power seat adjustment 1-4
Front seats 1-2
Front-door pocket 2-111
Fuel
Capacities and recommended fuel/lubricants 9-2
Fuel economy 5-222
Fuel gauge 2-10
Fuel octane rating 9-5
Fuel recommendation 9-5
Fuel gauge 2-10
Fuel-filler door 3-31
Fuses 8-26
Fusible links 8-27

G

Garage door opener, HomeLink® Universal Transceiver . .2-128, 2-129, 2-131, 2-132, 2-133, 2-136, 2-137, 2-138
Gauge
- Engine coolant temperature gauge . . .2-9
- Fuel gauge 2-10
- Odometer 2-8
- Speedometer 2-6, 2-7
- Tachometer 2-8
- Trip odometer 2-8

General maintenance 8-2
Glove box 2-113
Glove box lock 2-113

H

Hazard warning flasher switch 6-2
Head restraints 1-12
Head Up Display (HUD) 2-97
Headlight aiming control 2-86
Headlight and turn signal switch 2-83
Headlight control switch 2-83
Headlights 8-32
Headlights, aiming control 2-86
Heated 2nd row seat switches 2-94
Heated mirrors 3-46
Heated seat switches 2-93
Heated seats 2-92
Heater
- Heater and air conditioner controls . .4-33
- Heater operation 4-34

Hill descent control switch 2-95
Hill descent control system 5-236
Hill start assist system 5-237
HomeLink® Universal Transceiver 2-128, 2-129, 2-131, 2-132, 2-133, 2-136, 2-137, 2-138
Hood 3-24
Hook
- Luggage hook 2-119

Horn 2-92

I

Ignition switch
- Push-button ignition switch 5-15

Immobilizer system 2-78, 5-18
In-cabin microfilter (Air conditioner filter) 8-22
Increasing fuel economy 5-222
Indicator
- NISSAN Intelligent Key® battery discharge indicator 5-17

Indicator lights and audible reminders (See warning/indicator lights and audible reminders) 2-12
Inside automatic anti-glare mirror 3-38
Instrument brightness control 2-90
Instrument panel 0-6, 2-4
Instrument panel dimmer switch 2-90
Intelligent Around View® Monitor 4-10
Intelligent Blind Spot Intervention 5-76
Intelligent Cruise Control 5-105
Intelligent Cruise Control (ICC) (for vehicles with ProPILOT Assist) 5-149
Intelligent Driver Alertness 5-217
Intelligent Emergency Braking with Pedestrian Detection 5-178, 5-188
Intelligent Forward Collision Warning . .5-202
Intelligent Key system
- Key operating range 3-8
- Key operation 3-9
- Mechanical key 3-4
- Remote keyless entry operation 3-13
- Troubleshooting guide 3-19
- Warning signals 3-19

Intelligent Lane Intervention 5-46
Intelligent rearview mirror 3-39
Intelligent Ride Control 5-235
Intelligent Trace Control 5-235
Interior light 2-126
ISOFIX child restraints 1-33

J

Jump starting 6-16, 8-19

K

Key 3-2
Key fob battery replacement 8-30
Keyless entry
- With Intelligent Key system (See Intelligent Key system) 3-13

Keys
- NISSAN Intelligent Key® 3-2, 3-7
- NISSAN Vehicle Immobilizer System keys 3-4

L

Labels
- Air conditioner specification label . . .9-13
- Engine serial number 9-12
- Vehicle identification number (VIN) . . .9-11
- Vehicle identification number (VIN) plate 9-11
- Warning labels (for SRS) 1-101, 1-102

Lane Departure Warning (LDW) 5-39
LATCH (Lower Anchors and Tethers for CHildren) System 1-33
LED Daytime Running Lights (DRL) 2-89, 2-90
License plate
- Installing the license plate 9-14

Liftgate 3-24
Liftgate release 3-29
Light
- Air bag warning light 1-103, 2-16
- Brake light (See stop light) 8-33
- Bulb check/instrument panel 2-14
- Bulb replacement 8-33
- Charge warning light 2-15
- Exterior and Interior lights 8-33
- Fog light switch 2-91
- Fog lights 8-32
- Headlight and turn signal switch 2-83
- Headlight control switch 2-83
- Headlights 8-32
- Interior light 2-126
- Light bulbs 8-32
- Low tire pressure warning light 2-19
- Low windshield-washer fluid warning light 2-42, 2-69
- Personal lights 2-127
- Spotlights (See map light) 2-127
- Warning/indicator lights and audible reminders 2-12

Lights 8-32
- Map lights 2-127

Lock
- Child safety rear door lock 3-7
- Door locks 3-5
- Glove box lock 2-113
- Liftgate release 3-29
- Power door locks 3-6

Low fuel warning light 2-42, 2-69
Low tire pressure warning light 2-19
Low windshield-washer fluid warning light 2-42, 2-69
Luggage (See vehicle loading information) 9-14
Luggage hook 2-119
Luggage rack (see roof rack) 2-119

M

Maintenance
- General maintenance 8-2
- Inside the vehicle 8-3
- Maintenance precautions 8-5
- Outside the vehicle 8-2
- Seat belt maintenance 1-29
- Under the hood and vehicle 8-4

Maintenance requirements 8-2
Malfunction indicator light 2-21
Manual front seat adjustment 1-3
Map lights 2-127
Memory seat 3-47
Meters and gauges 2-6
- Instrument brightness control 2-90

Mirror
- Automatic anti-glare inside mirror . . .3-38
- Heated mirrors 3-46
- Intelligent rearview mirror 3-39
- Outside mirrors 3-45
- Rearview 3-37
- Vanity mirror 3-37

Mirrors 3-37
Moonroof 2-124, 7-5
Moving Object Detection (MOD) 4-26

N

NISSAN Intelligent Key® 3-2, 3-7
NISSAN Intelligent Key® battery discharge indicator 5-17
NISSAN Vehicle Immobilizer System 2-78, 5-18
NissanConnect® Owner's Manual 4-2

O

Octane rating (See fuel octane rating) . . .9-5
Odometer 2-8
Oil
- Capacities and recommended fuel/lubricants 9-2

Changing engine oil 8-12
Changing engine oil filter 8-12
Checking engine oil level 8-11
Engine oil 8-11
Outside mirrors 3-45
Overhead sunglasses holder 2-115
Overheat
If your vehicle overheats 6-18

P

Parking
Parking brake operation 5-27
Parking/parking on hills 5-225
Parking brake 2-15, 2-18, 2-22, 5-27
Parking brake and brake pedal 8-25
Personal lights 2-127
Power
Front seat adjustment 1-4
Power door locks 3-6
Power outlet 2-105, 2-106
Power rear windows 2-122
Power steering system 5-229
Power windows 2-120
Rear power windows 2-122
Power outlet 2-105, 2-106
Power steering 5-229
Precautions
Maintenance precautions 8-5
On-pavement and off-road driving precautions 5-11
Precautions on booster seats 1-42, 1-47, 1-54, 1-75
Precautions on child restraints 1-42, 1-47, 1-54, 1-75
Precautions on seat belt usage 1-19
Precautions on supplemental restraint system 1-80
Precautions when starting and driving .5-6
ProPILOT Assist 5-133
Push starting 6-18

R

Radio
Car phone or CB radio 4-40
Rain sensor 2-81
Rear Automatic Braking (RAB) 5-171
Rear center seat belt 1-25
Rear Cross Traffic Alert (RCTA) 5-90
Rear Door Alert . .2-40, 2-41, 2-66, 2-67, 2-104
Rear power sunshade 2-123
Rear power windows 2-122
Rear window and outside mirror defogger switch 2-83
Rear window wiper and washer switches 2-82
Rearview mirror 3-37
RearView Monitor 4-3
Recommended Fluids 9-2
Refrigerant recommendation 9-6
Registering a vehicle in another country 9-10
Remote Engine Start 3-21, 5-19
Roof rack 2-119

S

Safety
Child safety rear door lock 3-7
Child seat belts . .1-31, 1-42, 1-47, 1-54, 1-75
Seat
Memory seat 3-47
Seat adjustment
3rd row seat adjustment 1-9
Front manual seat adjustment 1-3
Front power seat adjustment 1-4
Rear seat adjustment 1-6
Seat belt
Child safety 1-29, 1-53
Infants and small children .1-30, 1-53, 1-54
Injured person 1-22
Larger children 1-30, 1-54
Precautions on seat belt usage 1-19
Pregnant women 1-22
Rear center seat belt 1-25
Seat belt extenders 1-29
Seat belt maintenance 1-29
Seat belts 1-19, 7-6
Three-point type with retractor 1-23
Seat belt extenders 1-29
Seat belt warning light 1-22, 2-16
Seatback pockets 2-112
Seats
Adjustment 1-2
Armrests 1-9
Front seats 1-2
Heated seats 2-92
Manual front seat adjustment 1-3
Seats/floor mats 7-5

Security system (NISSAN Vehicle Immobilizer System), engine start 2-78, 5-18
Security systems
Vehicle security system 2-77
Self-adjusting brakes 8-25
Servicing air conditioner 4-39
Spark plug replacement 8-21
Spark plugs 8-21
Specifications 9-7
Speed Limiter 5-100
Speedometer 2-6, 2-7
Spotlights (See map light) 2-127
SRS warning label 1-101, 1-102
Starting
Before starting the engine 5-18
Jump starting 6-16, 8-19
Precautions when starting and driving 5-6
Push starting 6-18
Starting the engine 5-18
Starting the engine 5-18
Steering
Power steering system 5-229
Steering Assist switch (for vehicles with ProPILOT Assist) 2-95
Steering wheel 3-34
Stop light 8-33
Storage 2-111
Storage tray 2-112
Sun visors 3-36
Sunglasses case 2-115
Sunglasses holder 2-115
Sunroof 2-124, 7-5
Supplemental air bag warning labels 1-101, 9-23
Supplemental air bag warning light 1-103, 2-16
Supplemental front impact air bag system 1-88
Supplemental restraint system
Information and warning labels 1-101, 1-102
Precautions on supplemental restraint system 1-80
Supplemental restraint system (Supplemental air bag system) 1-80
Switch
Autolight switch 2-84
Automatic power window switch . . .2-122
Fog light switch 2-91
Hazard warning flasher switch 6-2
Headlight aiming control 2-86
Headlight and turn signal switch 2-83
Headlight control switch 2-83
Hill descent control switch 2-95
Instrument brightness control 2-90
Power door lock switch 3-6
Rear window wiper and washer switches 2-82
Turn signal switch 2-90

T

Tachometer 2-8
Temperature gauge
Engine coolant temperature gauge . . .2-9
Theft (NISSAN Vehicle Immobilizer System), engine start 2-78, 5-18
Three-way catalyst 5-6
Tire
Flat tire 6-3, 6-4
Spare tire 6-5, 8-43
Tire chains 8-39
Tire placard 8-36, 9-12
Tire pressure 8-35
Tire rotation 8-40
Tires of 4-wheel drive 8-42
Types of tires 8-38
Uniform tire quality grading 9-18
Wheel/tire size 9-9
Wheels and tires 8-35, 9-9
Tire pressure
Low tire pressure warning light 2-19
Tire Pressure Monitoring System (TPMS) . .5-7
Top tether strap child restraint 1-38, 1-73
Towing
2-wheel drive models 6-21
4-wheel drive models 6-20
Flat towing 5-227
Tow truck towing 6-19
Trailer towing 5-226
Towing a trailer 5-226
Traffic Sign Recognition (TSR) 5-36
Transceiver
HomeLink® Universal Transceiver . .2-128, 2-129, 2-131, 2-132, 2-133, 2-136, 2-137, 2-138
Transmission
Driving with automatic transmission .5-20
Travel (See registering a vehicle in another country) 9-10

Trip odometer 2-8
Turn signal switch. 2-90

U

Uniform tire quality grading 9-18
USB/iPod® Charging Ports 2-107

V

Vanity mirror 3-37
Variable voltage control system 8-20
Vehicle dimensions and weights 9-9
Vehicle Dynamic Control (VDC) system .5-232
Vehicle identification 9-10
Vehicle identification number (VIN). 9-11
Vehicle identification number (VIN) (Chassis number) 9-11
Vehicle identification number (VIN) plate .9-11
Vehicle immobilizer system 2-78, 5-18
Vehicle information display 2-24, 2-49
Vehicle loading information 9-14
Vehicle recovery 6-22
Vehicle security system 2-77
Vehicle security system (NISSAN Vehicle Immobilizer System), engine start . . .2-78, 5-18
Vents 4-31
Visors 3-36

W

Walk away lock function 3-18
Warning
  Air bag warning light. 1-103, 2-16
  Battery charge warning light 2-15
  Brake warning light 2-14
  Engine oil pressure warning light 2-15
  Hazard warning flasher switch 6-2
  Low fuel warning light 2-42, 2-69
  Low tire pressure warning light 2-19
  Low windshield-washer fluid warning light 2-42, 2-69
  Seat belt warning light 1-22, 2-16
  Supplemental air bag warning light 1-103, 2-16
  Vehicle security system. 2-77
  Warning labels (for SRS) 1-101, 1-102
  Warning/indicator lights and audible reminders 2-12
Warning lights 2-12
Warning lights, indicator lights and audible reminders 2-12
Warning systems switch 2-96
Warning/indicator lights and audible reminders 2-12
  Audible reminders 2-12
  Indicator lights 2-12
  Warning lights. 2-12
Washer switch
  Rear window wiper and washer switches 2-82
Weights (See dimensions and weights) . .9-9
Wheel/tire size 9-9
Wheels and tires 8-35, 9-9
When traveling or registering in another country 9-10
Windows 2-120
  Locking passengers' windows 2-121
  Power rear windows 2-122
  Power windows 2-120
  Rear power windows 2-122
Windshield wiper blades 8-23
Windshield-washer fluid 8-16
Wiper
  Rear window wiper and washer switches 2-82
  Wiper blades 8-23
Wiper and washer switch 2-79
Wireless Charger 2-108

GAS STATION INFORMATION

FUEL INFORMATION:

⚠ CAUTION

Do not use leaded gasoline. Using leaded gasoline will damage the three-way catalyst.

For Mexico

Use UNLEADED REGULAR gasoline with an octane rating of at least 87 AKI (Anti-Knock Index) number (Research octane number 91).

Except for Mexico

Use UNLEADED REGULAR gasoline with an octane rating of at least 91 (RON).

RECOMMENDED ENGINE OIL:

See "Recommended SAE viscosity number" (P. 9-6).

COLD TIRE PRESSURE:

Refer to the tire placard.

The label is typically located on the driver side center pillar or on the driver's door. For additional information, see "Wheels and tires" (P. 8-35).

RECOMMENDED NEW VEHICLE BREAK-IN PROCEDURE:

During the first 2,000 km (1,200 miles) of vehicle use, follow the break-in procedure recommendations for the future reliability and economy of your new vehicle. For additional information, see "Break-in schedule" (P. 5-222). Failure to follow these recommendations may result in vehicle damage or shortened engine life.

Printing : May 2023
Publication No.: OM23EA 0R53G1
Printed in the U.S.A.

R53-A